INTLREG
INTERNATIONAL REGISTER OF SHIPPING

RULES AND REGULATIONS FOR CLASSIFICATION OF STEEL VESSELS 2021

Part 5
Machinery Equipment installation and Piping System

www.intlreg.org

This page is intentionally left blank

PART 5B Machinery Equipment Installation and Piping System

(For ships with L < 100m)

This page is intentionally left blank

CHANGES HISTORY

Refer Changes history in Part 1

CONTENTS

CHAPTER 1 GENERAL

CONTENTS

SECTION 1 CONDITIONS OF CLASSIFICATION OF MACHINERY

Contents

1.1 General

The provisions of Part 1, Chapter 1,"Classification Principles" are applicable to the classification of machinery.

1.2 Certification of Machinery

1.2.1 General requirements

To varying degrees, the Rules defines, extent of evaluation required for products, machinery, equipment and their components based on the level of criticality of each of those items. There are three basic evaluation constituents:

- Design review; prototype testing, as applicable
- Survey during construction and testing at the plant of manufacture; and
- Survey during installation onboard the vessel and at trials.

Where design review is required by the Rules, a letter will be issued by INTLREG upon satisfactory review of the plans to evidence the acceptance of the design. In addition to, or independent of, design review, INTLREG may require survey and testing of forgings, castings and component parts at the various manufacturers' plants as well as survey and testing of the finished product. A certificate or report will be issued upon satisfactory completion of each survey to evidence acceptance of the forging, casting, component or finished product. Design review, survey and the issuance of reports or certificates constitute the certification of machinery.

Based on the intended service and application, some products do not require certification because they are not directly related to the scope of classification or because normal practices for their construction within the industry are considered adequate. Such products may be accepted based on the manufacturers' documentation on design and quality.

In general, surveys during installation onboard the vessel and at trials are required for all items of machinery. This shall not considered a part of the product certification process. There may be instances, however, where letters or certificates issued for items of machinery contain conditions which must be verified during installation, tests or trials.

1.2.2 Type Approval Program

Under the INTLREG Type Approval Program, products that can be consistently manufactured to the same design and specification may be Type Approved. The INTLREG Type Approval Program is a voluntary option for demonstrating the compliance of a product with the Rules or other recognized standards. It may be applied for upon the request of the designer or manufacturer.

Generally, the INTLREG Type Approval Program covers Product Type Approval, but is also applicable for a more expeditious procedure towards Unit-Certification, as specified in Part 1, Chapter -1, Sec-11 [11.1.3.4 (a)].

Refer Part 1, Chapter -1, Sec-11 [11.1] for "INTLREG Type Approval Program".

1.2.3 Non-mass produced machinery

In accordance with the procedure described in[1.2.1] of this section, individually, unit certification of the non-mass produced critical machinery, such as propulsion boilers, slow speed diesel engines, turbines, steering gears, and similar critical items shall be done. However, it shall be considered to grant Type Approval to such machinery that is in the Acceptable Quality System

(AQS) and Recognized Quality System (RQS). Normally for all products, the category of Product Quality Assurance (PQA) will not be available, and such limitations will be indicated in Table 1.1.1 through Table 1.1.3 F, Where Type Approval is granted in each instant, in addition to quality assurance and quality control assessment of the manufacturing facilities, INTLREG will require some degree of product specific survey during manufacture.

1.2.4 **Details of certification of some representative products**

Based on the basic requirements of the Rules for machinery, abbreviated certification requirements of representative machinery are detailed in Table 1.1.1 through Table 1.1.3 F. The applicability of the Type Approval Program for each of these machinery items are also provided by the tables.

The tables contain six product categories as follows:

i) Prime movers

ii) Propulsion, maneuvering and mooring machinery

iii) Fire safety equipment

iv) Electrical and control equipment

v) Boilers, pressure vessels, fired equipment

vi) Piping system components

1.2.5 **Equipment List**

Table 1.1.3 of this Chapter provides an equipment listing of some representative products and certification requirements for products specific to vessels under 100 meters (328 ft) in length.

1.3 Shipboard Automatic or Remote Control and Monitoring Systems

Automatic or remote control and monitoring systems associated with propulsion machinery and monitoring systems of propulsion-machinery space installed onboard classed vessels are to comply with the requirements in Chapter 7,Sect 1 through Sect 3 or Chapter 7 Sect 6, as applicable. Additionally, where requested by the Owner and provided that compliance with Chapter 7,Sect 4 or Chapter 7 Sect 5 is met, the aforementioned systems will be assigned the optional notations CCS or UM , respectively. Refer Section Chapter 7,Sect 1.

1.4 Machinery Plans and Data

The following plans and data, as applicable for each vessel to be built under survey, shall be submitted and approved before construction is commenced, in accordance with Part 1 Chapter 1 Sect 5 of the INTLREG *Rules for Classification Regulations (Part 1)*. The sizes, dimensions, welding and other details, make and size of standard approved appliances shall be shown on the plans as clearly and fully as possible.

1.4.1 **General**

Details of dead ship start arrangements Refer Sect1 [1.10]

Description of all automatic trips that may affect the vessel’s propulsion syste

1.4.2 **Automation and Remote Control Systems**

A list of electrical, pneumatic or hydraulic equipment associated with the particular systems, including the data listed in Chapter 7,Sect 1[1.4.1]

A list of all major components installed within the particular equipment (i.e., control console, etc.) and the data as required in Chapter 7,Sect 1[1.4.1]

Certificates or test reports attesting to the suitability of the particular equipment in compliance with the environmental criteria set forth in Chapter 7,Sect 2 [2.8] For equipment that have been already certified by INTLREG and provided their certification remains valid, the submission of a copy of pertinent certificate will suffice Chapter 7,Sect2 [2.9.2]

Plans showing the location of control and monitoring stations, controlled equipment and piping/cable runs, etc.

Arrangements and details of the control consoles and panels, including plan views and elevation details, installation details and wiring data as listed in Chapter 7 Sect1[1.4.5]

A list of all cables connecting equipment associated with the systems Chapter 7,Sect1 [1.4.6]

A complete operational description of the automatic or remote control and monitoring systems Chapter 7,Sect1 [1.4.7]

A simplified one-line diagram (electrical and piping) of all power and automatic or remote control and monitoring systems Chapter 7,Sect1[1.4.8]

A schematic diagram of all control, alarm, display and safety systems. For computer-based systems, the following shall be included:

- Overall description and specification of the systems and equipment.
- Block diagrams for the computer hardware showing interfacing between the work stations, input/output (I/O) units, local controllers, traffic controllers, data highways, etc.
- Logic flow chart or ladder diagrams.
- Description of the alarm system indicating the ways it is acknowledged, displayed on the monitor or mimic display board, etc.
- Description of the system redundancy and back-up equipment, if any.
- Description of the data communication protocol, including anticipated data process response delays.
- Description of the system's security protocol to prevent unauthorized program changes which may compromise the integrity of the automatic or remote systems.
- Description of the system with regard to the degree of independence or redundancy provided for the control systems, alarm/display systems and safety systems.
- Description of system's task priorities.
- Where applicable, description of UPS (uninterruptible power supply) and their capacities, including system's power consumption.
- Equipment ratings and environmental parameters.

Installation methods (electrical, pneumatic and hydraulic) Chapter 7,Sect1 [1.4.11]

A matrix chart for each of the systems indicating the information listed in Chapter 7,Sect 1[1.4.12] upon activation of a given alarm or safety action.

1.4.3 Boilers, Pressure Vessels and Heat Exchangers

Arrangements and details of boilers, pressure vessels and heat exchangers required by Part 5A, Chapter 10 of the *INTLREG Rules for Building and Classing Steel Vessels*.

Plans and data for hydraulic and pneumatic power cylinders, as required by Chapter 4,Sect

6[6.1.5]

1.4.4 **Electrical Systems**

One line diagrams for the following electrical systems containing the information specified in Chapter 6,Sect 2 [2.1.1.2]

- Power supply and distribution
- Lighting including navigation lights
- Internal communication
- General emergency alarm
- Fire detection and alarm
- Steering gear control
- Intrinsically-safe equipment
- Emergency generator starting
- Inert gas control, monitoring and alarm
- Semiconductor converters for propulsion Short-circuit data Refer Chapter 6 Sect 2 [2.1.2]-

Protective device coordination study-Chapter 6,Sect 2 [2.1.3]

Electric-plant load analysis Chapter 6,Sect 2[2.1.4]

Booklet of standard wiring practices and details Chapter 6,Sect 2 [2.1.1.1 & 2.1.1.2]

General arrangement plan of electrical equipment showing the location of the equipment listed in-Part-6-Chapter 6-Sect 3[1.3] also Chapter 6,Sect 2[2.2.1.6]

Location of splices and cable boxes together with information of their services

Hazardous area plan Refer Chapter 6, Sect 3[3.6]

List of all equipment in hazardous areas Chapter 6,Sect 3[3.6]

Details of electrical components, as required by Chapter 6,Sect4 [4.1]

1.4.5 **Fire Safety**

Arrangement and details of control station for emergency closing of openings and stopping machinery Details and location of fireman's outfits

Details of fire extinguishing appliances Fire control plans Chapter 5, Sect 1[1.1.5]

Plans of the following systems:

- Fire main system
- Foam smothering system
- Fire detection systems
- Fixed gas extinguishing system
- Fixed water spraying system Other fire extinguishing arrangements

For vessels 500 GRT and over, the most severe service condition for the operation of the emergency fire pump (e.g., lightest draft as shown in Trim and Stability Booklet, etc.),

For vessels 500 GRT and over, calculations and pump data demonstrating that the emergency fire pump system can meet the operational requirements specified in Part 6-7-4/[4.3] with the proposed pump location and piping arrangements (e.g., adequate suction lift, discharge pressure, capacity, etc.) at the most severe service condition.

1.4.6 **Internal Combustion Engines**

Plans and particulars as required by Part 5A-Chapter 2-Sect 1 of the *INTLREG Rules for Building and Classing Steel Vessels.*

1.4.7 **Piping Systems**

Diagrammatic plans, as applicable, of the following piping systems containing the information specified in Chapter 4,Sect 1[1.2.2]

- Ballast system
- Bilge system
- Cargo systems
- Compressed air systems (including starting air systems and control systems)
- Cooling water systems
- Crude oil washing system
- Deck drains and scuppers
- Exhaust gas systems
- Essential fresh water service systems
- Fuel oil filling, transfer and service systems
- Hydraulic power piping systems
- Inert gas systems
- Lubricating oil systems
- Potable water system
- Sanitary system
- Essential Sea water service systems
- Steam system
- Vent, sounding and overflow piping
- Systems conveying toxic liquids, liquids with a flash point below 60ºC (140ºF), or flammable gases
- All Group I piping systems not covered above unless it is part of an independently manufactured unit (such as air conditioning or refrigeration) that does not form part of a vessel's piping system

A booklet of standard piping practices and details Chapter 4,Sect 3[3.5]

Plans of molded or built-up flexible expansion joints in seawater piping systems over 150 mm (6 in.), including details of the reinforcement arrangements Refer Chapter 4,Sect 1[1.5.4]

Specifications for plastic pipes and components, including thermal and mechanical properties and chemical resistance Refer Chapter 4,Sect2 [2.4], [2.5.7], [2.9.4]

Drawings of non-standard valves and fittings showing details of construction, materials and basis for pressure rating Refer Chapter 4,Sect 2[2.6.1.2]

Valve operating systems for all remote-controlled valves

1.4.8 **Propellers**

For all propellers, a propeller plan giving design data and characteristics of the material

For skewed propellers or propeller blades of unusual design, a detailed stress analysis, as required by Chapter 3 Sect 2[2.5.2] and [2.6.2]

For controllable pitch propellers, plans of the propeller hub, propeller blade flange and bolts, internal mechanisms, hydraulic piping control systems, and instrumentation and alarm systems; also strength calculations for the internal mechanism

Detailed stress calculations and fitting instructions for keyless propeller connections

1.4.9 **Reduction Gears**

Arrangements, details and data as required by Part 5A-Chapter 3-Sect 1 of the *INTLREG Rules for Building and Classing Steel Vessels.*

1.4.10 **Shafting**

Detailed plans with material specifications of the propulsion shafting, couplings, coupling bolts*, propulsion shafting arrangement, tail shaft bearings and lubrication system, if oil-lubricated

Calculations for flexible couplings and demountable couplings Refer Part 5A-Chapter 4-Sect 3[3.10.4 &3-10.5] Chapter 2 Sect 1[1.9] .

Shaft alignment and vibration calculations, if required by Chapter 3 Sect 1[1.12]

Detailed preloading and stress calculations and fitting instructions for non-fitted coupling bolts Refer Chapter 3 Sect 1[1.11.2]

* *Note:* Specific details regarding the interference fit of the coupling bolts shall be submitted. In addition, calculations and detail design basis for the sizing of the fitted bolts shall be submitted if the sizing of the bolts as Chapter 3 Sect1 [1.11.2] of the Rules shall not based on as-built line shaft diameter "*D*".

1.4.11 **Steering Gears**

General arrangements of the main and auxiliary steering gears and steering compartment Assembly of upper rudder stock, tiller, tie rod, rudder actuators, etc.

Construction details of all torque-transmitting components such as tiller, tiller pin, tiller/rudder stock interference fit mechanism, tie rod, rudder actuator, etc., including bill of materials, welding procedures and nondestructive testing, as applicable

Control system incorporating schematic electrical control logic diagram, instrumentation, alarm devices, etc., and including bill of materials

Design calculations for torque-transmitting components such as tiller, tie rod, rudder actuator, etc.

Details of electrical power supply to power units and to steering gear control, including schematic diagram of motor controllers, feeder cables and feeder cable electrical protection

Rated torque of main steering gear

Schematic hydraulic piping plan incorporating hydraulic logic diagram and including bill of materials, typical pipe to pipe joint details, pipe to valve joint details, pipe to equipment joint details, pressure rating of valves and pipe fittings and pressure relief valve settings

1.4.12 **Thrusters (Steerable, Athwartship)**

Drawings and data as per Part 5A-Chapter 7-Sect 1 of the *INTLREG Rules for Building and Classing Steel Vessels.*

1.4.13 **Waterjets**

Details and material specifications of force transmitting parts
Design basis stress calculations for the impellers, shafting, steering mechanism and reversing mechanism Chapter 3 Sect4 [4.1.2]
Calculations or test results to substantiate the suitability and strength of the pressure and suction housing Chapter 3 Sect 4[4.1.3]

1.4.14 **Windlass or Winch**

Arrangements, details and stress calculations for the windlass or winch, drums, brakes, shaft, gears, coupling bolts, wildcat, sheaves, pulleys and foundation.

Control arrangements

Electric one-line diagram, including power ratings and cable specifications

Piping system diagram, including working pressures, welding details, material specifications and pipe specifications

1.5 Machinery

Rotating machinery of 100 kilowatts (135 horsepower) and over shall be in accordance with the requirements of Part 6, Chapters 1 through 6, as applicable. Machinery of less than 100 kilowatts (135 horsepower) shall be designed, constructed and equipped in accordance with good commercial practice, and will be accepted subject to a satisfactory performance test conducted to the satisfaction of the Surveyor after installation.

1.6 Machinery Spaces

Machinery spaces shall be arranged so as to provide access to all machinery and controls as necessary for operation or maintenance.

1.7 Definitions

For the purpose of machinery installations, electrical installations, periodically unattended machinery spaces, fire protection, fire detection and fire extinction, the following terms are defined:

1.7.1 Category A Machinery Spaces

Machinery spaces of Category A are those spaces and trunks to such spaces that contain: internal combustion machinery used for main propulsion; internal combustion machinery used for purposes other than main propulsion, where such machinery has an aggregate total power output of not less than 375 kW (500 HP); oil fired equipment such as an inert gas generator, incinerator, waste disposal unit, etc.; or any oil fuel units.

1.7.2 Machinery Spaces

Machinery spaces are Category A spaces and all other spaces containing propelling machinery, internal combustion engines, boilers, generators, major electrical equipment,

refrigerating, stabilizing, ventilation and air conditioning machinery, similar spaces and trunks to such spaces.

1.7.3 Oil Fuel Unit

An oil-fuel unit is any equipment, such as pumps, filters and heaters, used for the preparation and delivery of fuel oil to oil-fired boilers (including incinerators and inert gas generators), internal combustion engines or gas turbines at a pressure of more than 1.8 bar (1.8 kgf/cm^2, 26 psi).

1.7.4 Accommodation Spaces

Accommodation spaces are those spaces used for public spaces, corridors, lavatories, cabins, offices, hospitals, cinemas, games and hobbies rooms, barber shops, pantries containing no cooking appliances and similar spaces.

1.7.5 Public Spaces

Public spaces are those portions of the accommodations which are used for meeting halls, dining rooms, lounges and similar permanently enclosed spaces.

1.7.6 Service Spaces

Service spaces are those spaces used for galleys, pantries containing cooking appliances, lockers, mail and specie rooms, storerooms, workshops other than those forming part of the machinery spaces, similar spaces and trunks to such spaces.

1.7.7 Cargo Spaces

Cargo spaces are all spaces used for cargo (including cargo oil tanks) and trunks to such spaces.

1.7.8 Special Category Spaces

Special category spaces are those enclosed spaces above or below the bulkhead deck intended for the carriage of motor vehicles with fuel in their tanks for their own propulsion, into and from which such vehicles can be driven and to which passengers have access.

1.7.9 Sources of Ignition

Sources of ignition consists of a flame, arc, spark and electrical equipment, machinery and other equipment having hot surfaces with the potential of causing a non-intentional explosion or fire when exposed to an explosive or flammable atmosphere or material.

1.7.10 Vital Systems

Vital systems are those systems necessary for the vessel's survivability and safety, including:

- Systems for fill, transfer and service of fuel oil.
- Fire-main systems, including emergency fire pump.
- Other required fire-extinguishing and detection systems.
- Bilge systems, including emergency bilge suction.
- Ballast systems.
- Steering systems and steering control systems.
- Propulsion systems and their necessary auxiliaries (fuel oil, lube oil, cooling water, starting system, etc.) and control systems.

- Systems for transfer and control of cargo.
- Ship's service and emergency electrical generation systems and their auxiliaries (fuel oil, lube oil, cooling water, starting system, etc.) and control systems.
- Venting and sounding systems.
- Engine room ventilation systems.
- Other required ventilation systems.
- Controllable pitch propeller systems, including controls.
- Electrical power and lighting systems.
- Systems used for navigation.
- Required communication and alarm systems.
- Hydraulic systems for anchor windlass/winch.
- Systems necessary due to special characteristics or special service of a vessel.
- Any other system identified by INTLREG as crucial to the survival of the vessel or to the protection of the personnel aboard.

1.7.11 Dead Ship Condition

Dead ship condition means a condition under which:

- The main propulsion plant, boilers and auxiliary machinery are not in operation due to the loss of the main source of electrical power, and
- In restoring propulsion, the stored energy for starting the propulsion plant, the main source of electrical power and other essential auxiliary machinery is assumed not available.

1.7.12 Blackout

Blackout is a sudden loss of electric power in the main distribution system. Stored energy are available (e.g. compressed air, starting current from batteries, etc.) for all means of starting to bring back the essential machineries in operation

1.8 Astern Propulsion Power

1.8.1 General

In all normal circumstances, sufficient power for going astern shall be provided in order to secure proper control of the vessel. In free route astern, the astern power of the main propelling machinery must have the capability of maintaining at least 70% of the ahead rpm corresponding to the maximum continuous ahead power. For main propulsion systems with reversing gears, controllable pitch propellers or electric propulsion drive, running astern shall not to lead to overload of the propulsion machinery. The ability of the machinery to reverse the direction of thrust of the propeller in sufficient time, and so to bring the vessel to rest within a reasonable distance from maximum ahead service speed, shall be demonstrated and recorded during trials.
Steam turbine propulsion

1.8.2 For a period of at least 15 minutes steam turbines shall be capable of maintaining in free route astern at least 70% of the ahead revolutions, where they are used for main propulsion. In order to avoid overheating of the turbine due to the effects of "windage" and friction, the

astern trial shall be limited to 30 minutes or shall be in accordance with manufacturer's recommendation

1.9 Inclinations

Machinery installations shall be designed to operate under the conditions as shown in Part 5B-1-1/Table 1. 1.1

1.10 Dead Ship Start .

As defined in Chapter 1 Sect 1[1.7.11],Chapter 6,Sect 2[2.2.1.3], Chapter 6 Sect 3[3.2.14] for the required starting arrangements, means shall be provided to bring the machinery into operation from a "dead ship" condition.

1.11 Machinery Equations

The equations for rotating parts of the machinery in the following sections are based upon strength considerations only. Their application does not relieve the manufacturer from responsibility for the presence of dangerous vibrations in the installation at speeds within the operating range. Refer also Chapter 3,Sect1 [1.12]

1.12 Ventilation of machinery spaces

Adequate ventilation shall be provided for machinery spaces so as to simultaneously allow for crew attendance and for engines, boilers and other machinery to operate at rated power in all weather conditions, including heavy weather. The main propulsion machinery space shall be provided with mechanical means of Ventilation

Air supply shall be provided through ventilators which can be used in all weather conditions. In general, ventilators necessary to continuously supply the main propulsion machinery space and the immediate supply to the emergency generator room are to have coamings of sufficient height to eliminate the need to have closing arrangements. INTLREG ,Part 4,chapter 6 Sec 8

However, lesser heights for machinery space and emergency generator room ventilator coamings may be accepted with provision of weather-tight closing appliances in accordance with Part 4, Ch-6, Sec-8 in combination with other suitable arrangements in order to ensure an uninterrupted and adequate supply of ventilation to these spaces, where due to the vessel size and arrangement this shall not practicable. Refer also Part 5A/Chapter 13/, Sec-2[2.1.2.2.2].

1.13 Engineers' Alarm

Refer Chapter 6,Sect 2[2.9.2]

1.14 Automatic Trips

A description of all automatic trips that may affect the vessel's propulsion system shall be submitted for review.

1.15 Thrusters and Dynamic Positioning Systems

Compliance with Part 5A-Chapter 7-Sect 8 of the *INTLREG Rules for Building and Classing Steel Vessels* is required as a condition for Class for main propulsion thrusters and is optional for propulsion-assist thrusters and athwartship thrusters. Dynamic positioning systems, including their thrusters, are to comply with the INTLREG *Guide for Dynamic Positioning Systems*.

1.16 Boilers, Pressure Vessels and Turbines

When fitted, boilers and pressure vessels shall be designed and constructed in accordance with INTLREG Part 5A, Chapter 10 of the *INTLREG Rules for Building and Classing Steel Vessels*. Turbines are to comply with Part 5A-Chapter2-Sect 3 and Part 5A-Chapter 2-Sect 4 of the *INTLREG Rules for Building and Classing Steel Vessels*

1.17 Sea Trial

1.17.1 Where the assignment of a Class Notation or a Statement of Compliance is requested, an Initial Survey is to comprise sea trial or initial in-service testing, reporting and assessment against the criteria set out in these Rules.

A final underway trial shall be made of all machinery, steering gear, anchor windlass, stopping and maneuvering capability, including supplementary means for maneuvering, if any. As far as practicable, the vessel is required to be ballasted or otherwise arranged in order to simulate fully laden condition so as to allow propulsion machinery to discharge its rated power. In the presence of the Surveyor, the entire machinery installation shall be operated in order to demonstrate its reliability and sufficiency so as to function satisfactorily under operating conditions and its freedom from dangerous vibration and other detrimental operating phenomena at speeds within the operating range. To the satisfaction of the Surveyor, all automatic controls including tripping of all safety protective devices that affect the vessel's propulsion system, shall be tested under way or alongside the pier. References are also to be made to the following for more detailed requirements:

- Steering gear trial: Chapter 3, Sect 3[3.8.2]
- Anchor windlass trial: Part 4-Chapter3-Sect 6[6.3]
- Remote propulsion control and automation trial: Part 6, Chapter-8, sect-3 and Chapter 7,Sect 3[3.1.3]
- Shipboard trials for diesel engines: Chapter-2, Sec-1 [1.11.]

1.17.2 On the basis of the sea trials, the following information shall be provided on board:

- Stopping time ,
- Vessel headings and distances recorded on sea trials, and
- For vessels with multiple propellers, ability to navigate and maneuver with one or more propellers inoperative.

Reference may be made to IMO Resolution A.209 (VII) *Recommendation on Information to be Included in the Maneuvering Booklet* and IMO Resolution A.601 (15) *Recommendation on the Provision and the Display of Maneuvering Information on board ships*

1.17.3 Residual Fuel

The viscosity of the fuel used on the sea trial will be entered in the classification report.

1.18 Units

These Rules are written in three systems of units, i.e., SI units, MKS units and US customary units. Each system shall be used independently of any other system. Unless indicated otherwise, the format presentation in the Rules of the three systems of units is as follows:
SI units (MKS units, US customary units).

1.19 Materials Containing Asbestos

Installation of materials which contain asbestos is prohibited.

1.20 Ambient Temperature

For vessels of unrestricted service, ambient temperature, as indicated in Table 1.1.2, shall be considered in the selection and installation of machinery, equipment and appliances. For vessels

of restricted or special service, the ambient temperature appropriate to the special nature shall be considered.

TABLE 1.1.1 Machine Installations – Inclinations

	Angle of Inclination, Degrees (1)			
	Athwart ships		Fore & Aft	
Installations, Components	Static	Dynamic	Static	Dynamic
Main and auxiliary machinery	15	22.5	5	7.5
Safety Equipment				
emergency power installations (3)	22.5	22.5	10	10
emergency fire pumps and their drives	22.5	22.5	10	10
Switchgear				
electrical and electronic appliances and remote control systems	22.5 (2)	22.5 (2)	10	10

Notes:

1 Athwart ships and fore-aft inclinations occur simultaneously.

2 Up to an angle of inclination of 45 degrees, switches and controls are to remain in their last set position.

3 In vessels designed for the carriage of liquefied gases and of chemicals, the emergency power installation is to remain operable with the vessel flooded to its permissible athwart ships inclination up to a maximum of 30 degrees.

TABLE 1.1.2. Ambient Temperatures for Unrestricted Service

Air		
Installation Components	Location, Arrangement (1, 2)	Temperature Range (°C)
Machinery and electrical installations	Enclosed Spaces – General	0 to +45
	Components mounted on machinery associated with high temperature	According to specific machinery and installation
	In spaces subject to higher temperature (details to be submitted)	According to the actual maximum ambient temperature
	In spaces with temperature lower than +45°C (details to be submitted)	According to the actual ambient temperature subject to minimum +40
	Open Deck	-25 to +45
Water		
Coolant		Temperature (°C)

Seawater	+32

Notes:

1 Electronic equipment shall be suitable for operations up to 55°C

For environmentally controlled spaces, refer Chapter -1 Sect 1[1.20]

TABLE: 1.1.3 Equipment List for Steel Vessels Under 100 meters (328 ft)

This equipment list has been annotated to agree with INTLREG *Rules for Building and Classing Steel Vessels Under 100 meters (328 feet) in Length*. This list shall not to be considered exhaustive: should additional equipment not listed to be fitted on board, the same will be specially considered for compliance with the Rules. In case of conflict between the content of this list and the applicable Rules and regulations, the latter shall be considered applicable.

Notes:

1 Please refer to the specific Rule requirement for the applicable latest revision.
2 INTLREG Surveyor may require additional certification on any equipment as considered necessary on a case-by-case basis.

Symbol	*Meaning*
d	DESIGN REVIEW – (Design Review Required)
m	MATERIAL TESTING – (Material Testing is to be witnessed by an IRS Surveyor)
s	MANUFACTURING SURVEYS – (Product is to be inspected during fabrication by an IRS Surveyor)
t	TYPE/PROTOTYPE – (Testing conducted on an actual sample or a prototype model is required, as applicable)
obs	ON BOARD SURVEYS – Operational, hydrostatic non-destructive testing, or other required tests are to be witnessed by an IRS surveyor after installation on board vessel
g	MANUFACTURER'S DOCUMENTATION–(Manufacturer should supply documentation to guarantee that the material or the equipment complies with an acceptable Standard, (e.g., Standard tests reports, Ex Certification, etc.)

TABLE 1.1. 3A: Certification Details – Prime Movers

Prime Movers (Refer note 1)	**Individual Unit Certification** (Refer note 2)	**Type Approval Program** (Refer note 3)					
		Product Design Assessment			**Manufacturing Assessment**		
		DesignReview	Type Exam.	Type Test	AQS	RQS	PQA
1.Diesel engines with cylinder bore; >300mm	d, m, s, t	x	x	x	o	o	NA

2.Diesel engines; steam turbines; gas turbines; ≥ 100kW (135hp)	d, m, s, t	x	x	x	o	o	o
3.Diesel engines; steam turbines; gas turbines, <100kW (135hp)	g	x	o	x	o	o	NA
4.Turbochargers for engines≥100kW (135hp) and bore ≥ 300mm (11.8in.)	d, m, s, t	x	x	x	o	o	o
5.Turbochargers for engines ≥ 100 kW (135hp) and bore < 300mm (11.8in.)	d, t	x	x	x	o	o	NA

Notes:

For full certification details, refer to Chapter 2 of this part.
2 Refer also [1.2.1] of this section. Notations used in this column are:
d – design review by INTLREG.
m – material tests witnessed by Surveyor.
s – survey at the plant of manufacture including witnessing acceptance tests on production unit.
t – type/prototype testing conducted on an actual sample or a prototype model is required, as applicable.
g – certification by INTLREG not required; acceptance based on manufacturer's guarantee.
3. For description of Type Approval Program, Refer Part 1, Chapter-1, Sec-11, notations used in these columns are:
x – indicates the particular element of the program is applicable.
o – indicates the particular element of the program is optional.
NA – indicates the particular element of the program shall not applicable.

TABLE 1.1.3B: Certification Details – Propulsion, Maneuvering and Mooring Machinery

Propulsion, Maneuvering and Mooring Machinery	**Individual Unit Certification** (Refer note 1)	**Type Approval Program** (Refer note 2)					
		Product Design Assessment			**Manufacturing Assessment**		
		Design Review	Type Exam.	Type Test	AQS	RQS	PQA

1.	Propulsion shafts, couplings, coupling bolts (Refer note 3)	d, m, s	x	NA	NA	o	o	NA
2.	Cardan shafts, standard couplings and coupling bolts	d, m, s	x	x	x	o	o	o
3.	Gears and Clutches ≥ 5590 kW (7500 hp)	d, m, s	x	x	x	o	o	NA
4.	Gears and clutches, ≥ 100 kW (135 hp)	d, m, s	x	x	x	o	o	o
5.	Gears and clutches, < 100 kW (135 hp)	g	o	o	x	o	o	NA
6.	Propellers, fixed and controllable pitch (Refer note 3)	d, m, s	x	NA	NA	o	o	NA
7.	Propulsion thrusters	d, m, s	x	x	x	o	o	o
8.	Steering gears	d, m, s	x	x	x	o	o	NA
9.	Athwartship thrusters	d, m, s	x	x	x	o	o	o
10.	Positioning thrusters (Refer note 4)	g	x	x	x	o	o	NA
11.	Dynamic positioning thrusters with DP	d, m, s, t	x	x	x	o	o	NA

	notation							

TABLE 1.1.3C -Certification Details – Electrical and Control Equipment

Electrical and Control Equipment (Refer note 1)		Individual Unit Certification (Refer note 2)	**Type Approval Program** (Refer note 3)					
			Product Design Assessment			Manufacturing Assessment		
			Design Review	Type Exam.	Type Test	AQS	RQS	PQA
1.	Generators and motors for essential services ≥100 kW (135 hp)	d, s, t	x	x	x	o	o	o
2.	Motors ≥100 kW (135 hp) for LNG cargo or vapor handling services. (Refer Part 7 B, Ch-3, Sec-12)	d, s, t	x	x	x	o	o	o
3.	Generators and motors for essential services <100 kW (135 hp)	g	o	o	x	o	o	NA
4.	Motors <100 kW (135 hp) for LNG cargo or vapor handling services. (Refer Part 7 B, Ch-3,	g	o	o	x	o	o	NA

	Sec-12)							
5.	Propulsion generators and motors	d, m, s, t	x	x	x	o	o	NA
6.	Switchboards (propulsion, main and emergency) (Refer note4)	d, s	x	NA	NA	o	o	o
7.	Motor controllers for essential services ≥ 100 kW (135 hp)	d, s	x	x	NA	o	o	o
8.	Motor controllers ≥ 100 kW (135 hp) for LNG cargo or vapor handling services. (Refer Part 7B, Ch-3, Sec-12)	d, s	x	x	NA	o	o	o
9.	Motor control centers for essential services ≥ 100 kW (135 hp)	d, s	x	x	NA	o	o	o
10.	Motor control centers ≥ 100 kW (135 hp) for LNG cargo or vapor handling services. (Refer Part 7B, Ch-3, Sec-12)	d, s	x	x	NA	o	o	o
11.	Battery charging and discharging boards for essential, emergency or transitional source of power. (Refer Part-6,	d, s	x	x	NA	o	o	o

	Ch-3, Sec-4)							
12.	Power transformers and converters of low voltage	g	x	x	x	o	o	NA
13.	Power transformers and converters for high voltage systems exceeding 1 kV	d, s	x	x	x	o	o	o
14.	Cables	d-1, t	x	x	x	o	o	o
15.	Propulsion cables	d-1, s, t	x	x	x	o	o	NA
16.	Circuit breakers & fuses	g	NA	x	x	o	o	NA
17.	Certified safe equipment	t	NA	x	x	o	o	NA
18.	Governors	t	NA	x	x	o	o	NA
19.	Control, monitoring and safety system devices, including computers, programmable logic controllers, etc., for **UM** and **CCS** notations	t	x	x	x	o	o	o
20.	Complete assembly or subassembly units for **UM** and **CCS** notations	d, s, t	x	x	x	o	o	NA

Notes:

1. *For full certification details, Refer Part-6 for electrical equipment and control, monitoring and safety system equipment.*
2. *Refer also [1.2.1] of this section. Notations used in this column are:*
   d – design review by INTLREG.
   d-1 – reviewed for compliance with a recognized standard.
   m – material tests to be witnessed by Surveyor.
   s – survey at the plant of manufacture including witnessing acceptance tests of production unit.
   t – type/prototype testing conducted on an actual sample or a prototype model is required, as applicable.
   g – certification by INTLREG not required; acceptance is based on manufacturer's guarantee.

3 For description of Type Approval Program, Refer Part 1, Chapter-1, Sec-11, Notations used in these columns are:
x – indicates the particular element of the program is applicable.
o – indicates the particular element of the program is optional.
NA – indicates the particular element of the program shall not applicable.
4 This equipment is generally made to custom design; but manufacturing facilities may be quality assurance approved, Refer [1.2.3] of this section.

TABLE 1.1.3D : Certification Details – Fire Safety Equipment

Fire Safety Equipment (Refer note 1)		**Individual Unit Certification** (Refer note 2)	**Type Approval Program** (Refer note 3)					
			Product Design Assessment			Manufacturing Assessment		
			Design Review	Type Exam.	Type Test	AQS	RQS	PQA
1.	Fire detection and alarm system components	d, t	x	x	x	o	o	NA
2.	Fixed fire extinguishing system components	d, t	x	x	x	o	o	NA
3.	Fireman's outfit	t	x	x	x	o	o	NA
4.	Fire hoses	t	x	x	x	o	o	NA
5.	Portable fire extinguishers	t	x	x	x	o	o	NA

Notes

1 For certification details, Refer Part 5A/Chapter 13/sect 3[3.4]

2 Refer also [1.2.1.] of this section. Notations used in this column are:
d – design review by INTLREG.

s – survey at the plant of manufacture and witness acceptance tests of production unit.

t – type/prototype testing conducted on an actual sample or a prototype model is required, as applicable; or type approval by Flag Administration.

3 For description of Type Approval Program, Refer Part 1, Chapter-*1, Sec-11. Notations used in these columns are:*
x – indicates the particular element of the program is applicable.
o – indicates the particular element of the program is optional.

TABLE 1.1.3E : Certification Details – Boilers, Pressure Vessels and Fired Equipment

Boilers, Pressure Vessels and Fired Equipment (Refer note 1)		**Individual Unit Certification** (Refer note 2)	**Type Approval Program** (Refer note 3)					
			Product Design Assessment			**Manufacturing Assessment**		
			Design Review	Type Exam.	Type Test	AQS	RQS	PQA
1.	Group I boilers and pressure vessels	d, m, s	x	x	NA	o	o	NA
2.	Group II pressure vessels	d, s	x	x	NA	o	o	o
3.	Inert gas generators, incinerators	d	x	x	x	o	o	NA

Notes:

1. For grouping of boilers and pressure vessels, Refer Part 5A/Chapter-10, Sec-1/ [1.4] & [1.5].

2. Refer also [1.2.1] of this section. Notations used in this column are:

   d – design review by INTLREG
   m – material tests to be witnessed by Surveyor
   s – survey at the plant of manufacture and witness acceptance tests of production unit

3. For description of Type Approval Program, Refer Part 1, Chapter-1, Sec-11 Type Approval Programs are generally applicable to mass produced boilers and pressure vessels (Refer Pt 5A,Chapter-10, Sec-1, [1.6.2]). Notations used in these columns are:

   x – indicates the particular element of the program is applicable

   o – indicates the particular element of the program is optional

   NA – indicates the particular element of the program shall not applicable

TABLE 1.1. 3F: Certification Details – Piping System Components

Piping System Components (Refer note 1)	**Individual Unit Certification** (Refer note 2)	**Type Approval Program** (Refer note 3)					
		Product Design Assessment			**Manufacturing Assessment**		
		Design Review	Type Exam.	Type Test	AQS	RQS	PQA

1	Pumps related to propulsion diesel engines (bore >300 mm) (11.8 in.) and gas turbines and gears—fuel, cooling water, lube. Oil services	s	x	x	x	o	o	o
2	Pumps related to propulsion steam plant and gears—fuel oil, lube. Oil, condensate, main circulating, feed water services	s	x	x	x	o	o	o
3	Hydraulic pumps of steering gears, controllable pitch propellers, anchor windlass	s	x	x	x	o	o	o
4	Pumps for fire main, ballast, bilge, liquid cargoes	s	x	x	x	o	o	o
5	Air compressor s	g	x	x	x	o	o	NA
6	Steel pipes, classes I and II	m, s	x	NA	NA	o	o	o

7	Steel pipes, class III	g	x	NA	NA	x	x	NA
8	Pipe fittings—flanges, elbows, tees, flexible joints, etc., and valves; classes I & II	d-1	x	NA	NA	o	o	NA
9	Pipe fittings—flanges, elbows, tees, flexible joints, etc., and valves; class III	g	x	NA	NA	o	o	NA
10	Plastic pipes and pipe joints	d-2, t, s (Refer note 4)	x	x	x	o	o	o
11	Hoses	d-2, t	x	x	x	o	o	NA
12	Vent heads, pressure vacuum valves	d-2, t	x	x	x	o	o	NA
13	Gauges, detectors and transmitters	d-2	x	x	x	o	o	NA
14	Fluid power cylinders and systems, including valve actuators	d-1	x	x	x	o	o	NA

Notes

1 For full certification details, Refer Part5 A/ Chapter-8, Sec-1, [1.4] and Chapter-8, Sec-2 for metallic piping and Chapter-8, Sec-3 for plastic piping.

2 Refer also [1.2.1] of this section. Notations used in this column are:

d-1 – verification for compliance with recognized standard or design review by INTLREG.

d-2 – reviewed for suitability for proposed installation.

m – material tests witnessed by Surveyor.

s – survey at the plant of manufacture, including witnessing acceptance tests of production unit.

t – type/prototype testing conducted on an actual sample or a prototype model is required, as applicable. Where, for plastic pipes, the manufacturer does not have a certified quality system in accordance with Part 1, Chapter-*1, Sec-11,]11.1.3.1 b) or ISO 9001 (or equivalent), and that ensures testing is carried to demonstrate the compliance of plastic pipes, fittings and joints with Chapter-8, Sec-3, as applicable, testing shall be witnessed by Surveyor.*

g – certification by INTLREG not required; acceptance is based on manufacturer's documentation.

3 For description of Type Approval Program, Refer Part 1, Chapter-*1, Sec-11, Notations used in these columns are:*
x – indicates the particular element of the program is applicable.

o – indicates the particular element of the program is optional.

NA – indicates the particular element of the program shall not applicable.

4 Where the manufacturer does not have a certified quality system, Refer Part 5A/Chapter 8/ sec 3[3.4.2].
5 *Other than steering gear actuators.*

CHAPTER 2 PRIME MOVERS

CONTENTS

SECTION 1 INTERNAL COMBUSTION ENGINES AND REDUCTION GEARS

Contents

1.1 General

1.1.1. Construction and Installation

Internal combustion engines of 100 kW [135 horsepower (hp)] and over and associated reduction gears shall be constructed in accordance with Part 5B Chapters 2 and 3 of the *INTLREG Rules for building and Classing Steel Vessels* and installed in accordance with the following requirements to the satisfaction of the Surveyor. Engines of less than 100 kW (135 hp) and associated reduction gears shall be constructed and equipped in accordance with good commercial practice, and will be accepted subject to a satisfactory performance test conducted to the satisfaction of the Surveyor after installation.

For engines driving generators, refer to the applicable requirements of Chapter 6 ,Sect4 [4.2.9] and [4.2.10]

1.1.2. Piping Systems

In addition to requirements for the specific system in this section, piping systems are to comply with the applicable requirements in Chapter 4 of this part

1.1.3. Pressure Vessels and Heat Exchangers

Pressure vessels and heat exchangers shall be in accordance with the applicable requirements of Part 5 A /Chapter 10 pressure vessels and, Part 5A –Chapter 9-Sect 7[7.4.4] heaters of the *INTLREG Rules for Building and Classing Steel Vessel*

1.1.4. Torsional Vibration Stresses

Refer to Chapter 6,Sect1 [1.12] of this Part

1.1.5. Strengthening for Navigation in Ice

For gears designed for navigation in ice, Refer Part 7B Special type ships, Chapter 1 of the *INTLREG Rules for Building and Classing Steel Vessels*.

1.1.6. Crankcase Ventilation

1.1.6.1 General

Provision shall be made for ventilation of an enclosed crankcase by means of a small breather or by means of a slight suction not exceeding 25.4 mm (1 in.) of water. Crankcases are not to be ventilated by a blast of air. Otherwise, the general arrangements and installation shall be such as to preclude the possibility of free entry of air to the crankcase.

1.1.6.2 Piping Arrangement

Crankcase ventilation piping shall not be directly connected with any other piping system. Crankcase ventilation pipes from each engine are normally to be led independently to the weather and fitted with corrosion-resistant flame screens. However, crankcase ventilation pipes from two or more engines may lead to a common oil mist manifold.
Where a common oil mist manifold is employed, the vent pipes from each engine shall be led independently to the manifold and fitted with a corrosion-resistant flame screen within the manifold. The arrangement shall not to violate the engine manufacturer's recommendations for crankcase ventilation. The common oil mist manifold shall be accessible at all times under normal conditions and effectively vented to the weather. Where venting of the manifold to the weather is accomplished by means of a common vent pipe, the location of the manifold shall be as close as practicable to the weather

such that the length of the common vent pipe is no greater than one deck height. The clear open area of the common vent pipe shall not less than the aggregate cross-sectional area of the individual vent pipes entering the manifold, and the outlet to the weather shall be fitted with a corrosion-resistant flame screen. The manifold is also to be fitted with an appropriate draining arrangement.

1.1.7. Warning Notices

Suitable warning notices shall be attached in a conspicuous place on each engine and are to caution against the opening of a hot crankcase for a specified period of time after shutdown based upon the size of the engine, but not less than 10 minutes in any case. Such notice is also to warn against restarting an overheated engine until the cause of overheating has been remedied.

1.1.8. Bedplate/crankcase

The construction of bedplate or crankcase shall be rigid, oil tight, and it shall be provided with adequate number of bolts to secure the same to the vessel's structure. Also refer to Part 5A-Chapter 2-Sect 1[1.6.3] for seating Arrangements of diesel Engines .

1.2 Fuel Oil Pumps and Oil Heaters

1.2.1 Transfer Pumps

Refer to Chapter 4,Sect4[4.2]

1.2.2 Booster Pumps

A stand-by fuel-oil booster pump shall be provided for main engines having independently driven booster pumps. For main engines having attached fuel pumps, a complete pump may be carried as a spare in lieu of the standby pump.

The spare pump need not be provided for multiple-engine installations provided that, in the event of the loss of one engine, at least forty percent of the total rated propulsion power remains.

1.2.3 Heaters

At least two heaters of approximately equal size should be installed, when fuel oil heaters are required for propulsion engine operation. The combined capacity of the heaters shall not be less than that required by the engine(s) at rated power. Refer Part 5A/Ch**apter**-9, Sect-7 [7.4.4] for heater design requirements.

1.3 Fuel Oil Pressure Piping

In addition to complying with Part 5A/Chapter-9, Sect-7 [7.4.1], pipes from booster pump to injection pump should be seamless steel pipe of at least standard wall thickness. Pipe fittings and joints are required to be done in accordance with Part 5A/ Table 9.7.2, subject to further limitations as follows:

1.3.1 Connections to valves and equipment may be of taper-thread joints up to 50 mm (2 in.) nominal diameter; and

1.3.2 Pipe joints using taper-thread fittings and screw unions are not to be in sizes of 25 mm (1 in.) nominal diameter and over.

Spray shields should be fitted around flanged joints, flanged bonnets and any other flanged or threaded connections in fuel oil piping systems under pressure exceeding 0.18 N/mm^2 (1.84 kgf/cm^2, 26 psi) which are located above or near units of high temperature, including boilers, steam pipes, exhaust manifolds, silencers or other equipment required to be insulated by Part

5A/Chapter-9, Sect-7[7.2.2], and to avoid, as far as possible, oil spray or oil leakage into machinery air intakes or other sources of ignition. The number of joints in such piping systems should be kept to a minimum.

1.4 Fuel Oil Injection System

1.4.1 General

Strainers shall be provided in the fuel oil injection pump suction line.

For main propulsion engines, the arrangement shall be such that the strainers may be cleaned without interrupting the fuel supply to the engine. However, where multiple engines are provided, a dedicated simplex strainer may be fitted for each engine, provided the vessel can maintain at least one-half of the design speed or seven knots, whichever is less, while operating with one engine temporarily out of service until its strainer can be cleaned.

For auxiliary engines, the arrangement shall be such that the strainers may be cleaned without undue interruption of power necessary for propulsion. Multiple auxiliary engines, each fitted with a separate strainer and arranged such that changeover to a standby unit can be accomplished without loss of propulsion capability, will be acceptable for this purpose.

Where strainers are fitted in parallel to enable cleaning without disrupting the oil supply, means shall be provided to minimize the possibility of a strainer being opened inadvertently. Strainers shall be provided with suitable means for venting when being put in operation and being depressurized before being opened. Strainers shall be so located that in the event of leakage, oil cannot be sprayed on to the exhaust manifold or surfaces with temperatures in excess of 220°C (428°F).

The injection lines shall be of seamless drawn pipe. Fittings shall be extra heavy. The material used may be either steel or nonferrous, as approved in connection with the design. Also refer to Part 5A-Chapter8-Sect 4[4.2.2.7].

1.4.2 Piping Between Injection Pump and Injectors

1.4.1.1. Injection Piping

All external high pressure fuel delivery lines between the high-pressure fuel pumps and fuel injectors are required to be protected with a jacketed piping system capable of containing fuel from a high- pressure line failure. A jacketed pipe incorporates an outer pipe into which the high-pressure fuel pipe is placed, forming a permanent assembly. Metallic hose of an approved type may be accepted as the outer pipe, where outer piping flexibility is required for the manufacturing process of the permanent assembly. The jacketed piping system is to include means for collection of leakages and arrangements shall be provided for an alarm to be given of a fuel line failure.

1.4.1.2. Fuel oil Return Piping

Jacketing of the return pipes is also required, when the peak to peak pressure pulsation in the fuel oil return piping from the injectors exceeds 20 bar (20.5 kgf/cm^2, 285 psi)

1.4.1.3. High Pressure Common Rail System

Where a high pressure common rail system is fitted to an engine, the high pressure common rail is required to be done in accordance with Part 5A -Chapter-10, Sect-1 for pressure vessels, or a recognized standard as listed in part 5A Chapter-10, Sect-1[1.3]. Alternatively, the design may be verified by certified burst tests. Components

should be made of steel or cast steel. Components made of steel, other than cast steel, are to withstand not less than 4 times the maximum allowable working pressure. The cast steel common rails are to withstand not less than 5 times the maximum allowable working pressure. The use of non-ferrous materials, cast iron and nodular iron is prohibited.

Materials are required to comply with Part-2, Chapter-2.

In case of a failure of the high pressure common rail system, the high pressure common rail systems is required to be properly enclosed and provided with arrangement for leak collection and alarm, refer Part 5A /Chapter 8/Section 4 [4.2.2.7 (a)].

and Chapter 2 Sect 1[1.4.1.1] above

1.4.3 **Piping Between Booster Pump and Injection Pumps**

Spray shields shall be fitted around flanged joints, flanged bonnets and any other flanged or threaded connections in fuel oil piping systems under pressure exceeding 1.8 bar (1.84 kgf/cm^2, 26 psi) which are located above or near units of high temperature, including boilers, steam pipes, exhaust manifolds, silencers or other equipment required to be insulated by Ch 4, Sect [4.1.1.2] and to avoid as far as practicable oil spray or oil leakage into machinery air intakes or other sources of ignition. The number of joints in such piping systems shall be kept to a minimum.

1.5 Lubricating Oil Systems

1.5.1 General

The following requirements are applicable for main and auxiliary diesel engines and for reduction gears associated with diesel propulsion. Refer also Chapter 1,Sect1 [1.9] and Chapter 4,Sect4 [4.5]

1.5.2 Low Oil Pressure Alarms, Temperature and Level Indicators

Audio visual alarm devices shall be fitted to indicate any failure of the lubricating oil system on board the vessel. The lubricating oil systems shall be provided with pressure and temperature indicators to ensure proper circulation is being maintained.

1.5.3 Drain Pipes

Lubricating oil drain pipes from the engine sumps to the drain tank are required to be submerged at their outlet ends. No interconnection shall be made between the drain pipes from the crankcases of two or more engines.

1.5.4 Lubricating Oil Pumps

In cases where forced lubrication is used for propulsion engines, one independently driven standby pump shall be provided in addition to the necessary pumps for normal operation. Where the size and design of an engine is such that lubrication before starting shall not necessary and an attached lubricating pump is normally used, an independently driven standby pump shall not required if a complete duplicate of the attached pump is carried as a spare.

The spare pump need not be provided for multiple-engine installations provided that, in the event of the loss of one engine, at least forty percent of the total rated propulsion power remains.

1.5.5 Filters and Strainers

1.5.5.1 Diesel engines: An oil filter of the duplex type shall be provided or otherwise arranged so that it may be cleaned without interrupting the flow of oil. In the case of main propulsion engines which are equipped with full-flow-type filters, the arrangement should be such that the filters may be cleaned without interrupting the oil supply

1.5.5.2 Reduction gears: A magnetic strainer and a fine mesh filter are required to be fitted. In order to clean the filter and strainer without interrupting the oil flow, each of these are required to be of the duplex type or otherwise arranged

1.5.5.3 Gas turbines: A magnetic strainer and a fine mesh filter are required to be fitted in the lubricating oil piping to the turbines. In order to clean without interrupting the flow of oil, arrangements of each filter and strainer should be of the duplex type or otherwise

1.5.5.4 Safety requirements: Arrangements and location of the strainers and filters are required to be done in such a manner so that in the event of leakage, oil will not spray on the surfaces with temperature in excess of 220°C (428°F). For depressurization and venting, refer Part 5A- Chapter-9, Sect-7[7.4.5].

1.5.6 Lubricating-Oil Systems for Reduction Gears

Where a reduction gear is driven by a single engine and a common lubricating-oil system is used for both the engine and gear, then the requirements in Chapter 2, Sect1 [1.5.1] to [1.5.5] above applicable

Where a reduction gear is driven by more than one engine or any other case where a separate lubricating- oil system is provided for the reduction gear, the following requirements are applicable.

1.5.6.1 Pumps

Two lubricating-oil pumps shall be provided, at least one of which shall be independently driven. The capacity of each pump shall be sufficient for continuous operation of the main propulsion plant at its maximum rated power.

1.5.6.2 Coolers

One or more lubricating oil coolers with means for controlling the oil temperature shall be provided together with two separate cooling water pumps, at least one of which shall be independently driven. The coolers shall have sufficient capacity to maintain the required oil temperature while the main propulsion plant is operating continuously at its maximum rated power.

1.5.6.3 Indicators

The pressure and temperature at water inlet and oil outlet can be observed from the indicators fitted at corresponding locations. Gravity tanks shall be fitted with a low level alarm and a sight glass fitted in the overflow line to the sump. Pressure systems shall be fitted with a low pressure alarm. Sump and gravity tanks shall be provided with suitable gauges for determining the level of oil in the tanks.

1.5.6.4 Filters

A filter shall be provided in the lubricating-oil piping to each reduction gear. The requirements in Chapter 2,Sect 1[1.5.5] applicable

1.6 Cooling Water Systems

1.6.1 General

Means shall be provided to ascertain the temperature of the circulating water at the return from each engine and to indicate that the proper circulation is being maintained. Drain cocks shall be provided at the lowest point of all jackets. For relief valves, Refer Chapter 4, Sect1 [1.5.9]

1.6.2 Sea Suctions

At least two independent sea suctions shall be provided for supplying water to the engine jackets or to the heat exchangers. The sea suctions shall be located so as to minimize the possibility of blanking off the cooling water.

1.6.3 Strainers

Where seawater is used for direct cooling of the engines, unless other equivalent arrangements are specially approved, suitable strainers shall be fitted between the sea valves and the pump suctions. The strainers shall be either of the duplex type or otherwise arranged so they can be cleaned without interrupting the cooling water supply.

1.6.4 Circulating Water Pumps

There shall be at least two means for supplying cooling water to main and auxiliary engines, compressors, coolers, reduction gears, etc. One of these means shall be independently driven and may consist of a connection from a suitable pump of adequate size normally used for other purposes, such as a general service pump, or in the case of fresh-water circulation, one of the vessel's fresh-water pumps. Where, due to the design of the engine, the connection of an independent pump is impracticable, the independently driven stand-by pump will not be required if a complete duplicate of the attached pump is carried as a spare. For multiple propulsion engines using identical attached pumps, only one complete pump needs to be carried as a spare.

1.7 Starting Systems

1.7.1 Starting Air Systems

The design and construction of all air reservoirs shall be in accordance with the applicable requirements of Part 5A-Chapter8-Sect 4[4.5] of the *INTLREG Rules for Building and Classing Steel Vessels*. The piping system shall be in accordance with the applicable requirements of Part 5A, Chapter 8 of these Rules. To minimize the entry of oil or water into the compressed air system, provisions are required to be made. Suitable separation and drainage arrangements are required to be provided before the air enters the reservoirs The air reservoirs shall be so installed as to make the drain connections effective under extreme conditions of trim. Compressed air systems shall be fitted with relief valves and each air reservoir which can be isolated from a relief valve shall be provided with its own safety valves or equivalent. Connections are also to be provided for cleaning the air reservoir and pipe lines.

All discharge pipes from starting air compressors shall be led directly to the starting air reservoirs, and all starting pipes from the air reservoirs to main or auxiliary engines shall be entirely separate from the compressor discharge piping system.

1.7.2 Starting Air Capacity

Vessels having main engines arranged for air starting shall be provided with at least two starting-air reservoirs of equal size. The total capacity of the starting-air reservoirs shall be sufficient to provide, without recharging the air reservoirs, at least the number of starts stated below.

If other compressed air systems, such as control air, are supplied from starting air reservoirs, the capacity of the air reservoirs shall be sufficient for continued operation of these systems after the air necessary for the required number of consecutive starts has been used

1.7.2.1 Diesel Propulsion

The minimum number of consecutive starts (total) required to be provided from the starting-air reservoirs shall be based upon the arrangement of the engines and shafting systems as indicated in the following table.

	Single Propeller Vessels		Multiple Propeller Vessels	
Engine Type	One engine coupled to shaft directly or Through reduction gear	Two or more engines coupled to shaft through clutch and reduction gear	One engine coupled to each shaft directly or through reduction gear	Two or more engines coupled to each shaft through clutch and reduction gear
Reversible	12	16	16	16
Non-reversible	6	8	8	8

For arrangements of engine and shafting systems which differ from those indicated in the table, the capacity of the starting-air reservoirs will be specially considered based on an equivalent number of starts.

1.7.2.2 Diesel-electric Propulsion or turbine-electric propulsion

The minimum number of consecutive starts required to be provided from the starting-air reservoirs shall be determined from the following equation:

$S = 6 + G(G - 1)$

where

S = total number of consecutive starts

G = number of engines necessary to maintain sufficient electrical load to permit vessel transit at full seagoing power and maneuvering.The value of G need not exceed 3.

a) Other compressed air systems

If other compressed air consuming systems, such as control air, are supplied from the starting air reservoirs, the aggregate capacity of the reservoirs is required to be sufficient for continued operation of these systems after the air necessary for the required number of starts has been used.

b) Certification of Starting Air Reservoirs

Starting air reservoirs having a design pressure greater than 6.9 bar (7 kgf/cm^2, 100 psi) or with a design pressure greater than 1.0 bar (1.0 kgf/cm^2, 15 psi) and design temperature greater than 149°C (300°F) are required to be certified by INTLREG, refer Part 5A-Chapter-8, Sect-4[4.5.3].

1.7.3 Starting Air Compressors

Air starting arrangement of vessels having internal-combustion engines, there shall be two or more air compressors, at least one of which shall be driven independently of the propulsion engines , and the total capacity of air compressors driven independently of the main propulsion unit shall be not less than 50% of the total required.

The total capacity of the air compressors shall be sufficient to supply within one hour the quantity of the air need to satisfy Part 5A-Chapter8-Sect 4[4.5.2] by charging the reservoirs from atmospheric pressure. The capacity shall be approximately equally divided between the number of compressors fitted, excluding an emergency compressor, where fitted.

The arrangement for dead ship air starting shall be such that the necessary air for the first charge can be produced onboard without external aid. Refer Part 5A-Chapter1-Sect 4[4.5]

1.7.4 Protective Devices for Starting-Air Mains

In order to protect starting air mains against explosions arising from improper functioning of starting valves, an isolation non-return valve or equivalent shall be installed at the starting air supply connection to each engine. Where engine bores exceed 230 mm ($9^{1}/_{16}$ in.), a bursting disc or flame arrester shall be fitted in way of the starting valve of each cylinder for direct reversing engines having a main starting manifold or at the supply inlet to the starting-air manifold for non-reversing engines.

The above requirement is applicable to engines where the compressed air is directly injected into the cylinder. It shall not intended to apply to engines utilizing air start motors.

1.7.5 Electrical Starting

1.7.5.1 Main Engine

Where the main engine is arranged for electric starting, at least two separate batteries (or separate sets of batteries) shall be fitted. The arrangement shall be such that the batteries (or sets of batteries) cannot be connected simultaneously in parallel. Each battery (or set) shall be capable of starting the main engine when in cold and ready to start conditions. The combined capacity of the batteries shall be sufficient without recharging to provide within 30 minutes the number of starts of main engines as required for air starting in Section [1.7.2] of this chapter and if arranged also to supply starting for auxiliary engines, the number of starts required in Part 5A/ Table 8.4.4

1.7.5.2 Auxiliary Engine

Electric starting arrangements for auxiliary engines are to have at least two separate batteries (or separate sets of batteries) or may be supplied by separate circuits from the main engine batteries when such are provided. Where one auxiliary engine is arranged for electric starting, one battery (or set) may be accepted in lieu of two separate batteries (or sets). The capacity of the batteries for starting the auxiliary engines shall be sufficient for at least three starts for each engine.

1.7.5.3 Other Requirements

For starting engine’s batteries (or set of batteries) shall be used and for engine’s own control and monitoring purpose also .When the starting batteries are used for engine’s own control and monitoring purpose, the aggregate capacity of the batteries shall be sufficient for continued operation of such system in addition to the required number of starting capacity. Provisions shall be made to continuously maintain the stored energy at all times. Refer also Chapter.6,Sections 2 [2.3.11] and Sect 3 [3.2.4]

1.7.6 Hydraulic Starting

Hydraulic oil accumulators for starting the main propulsion engines are to have sufficient capacity without recharging for starting the main engines, as required in Part 5A-Chapter 8-Sect 6[6.2.3.4]

1.8 Engine Exhaust Systems

1.8.1 General

This requirement applies to internal combustion engine exhaust gas piping led to the atmosphere through the funnel

The exhaust pipes shall be water-jacketed or effectively insulated with non-combustible material. The insulation material shall not be of the oil-absorbing type unless encased in metal sheets or equivalent, in places where oil spray or leakage can occur Engine exhaust systems shall be so installed that the vessel's structure cannot be damaged by heat from the systems. Exhaust pipes of several engines are not to be connected together but shall be run separately to the atmosphere unless arranged to prevent the return of gases to an idle engine. Exhaust lines which are led overboard near the waterline shall be protected against the possibility of the water finding its way inboard.

Boiler uptakes and engine exhaust lines shall not be interconnected except when specially approved as in cases where the boilers are arranged to utilize the waste heat from the engines

To prevent excessive strain on the pipes, exhaust pipes are required to be adequately supported and fitted with means to take account of the expansion and contraction. Expansion joints or equivalent may be used.

Precautions are required to be taken in the installation of equipment and piping handling fuel oil, lubricating oil and hydraulic oil, such that any oil that may escape under pressure will not come in contact with exhaust gas piping.

1.8.2 Exhaust System Materials

Materials used in the exhaust system shall be resistant to saltwater corrosion, galvanically compatible to each other and resistant to exhaust products. Plate flanges will be considered where the specified material is suitable for exhaust piping pressures and temperatures.

1.8.3 Exhaust Gas Temperature

Propulsion engines with bores exceeding 200 mm (7.87 in.) shall be fitted with a means to display the exhaust gas temperature at the outlet of each cylinder.

1.9 Couplings

1.9.1 Flexible Shaft Couplings

Details of the various components of flexible couplings for main propulsion machinery and ship's service generator sets shall be submitted for approval.

1.9.1.1 Design

Flexible couplings intended for use in propulsion shafting shall be of approved designs. Couplings shall be designed for the rated torque, fatigue and avoidance of overheating. Where elastomeric material is used as a torque-transmitting component, it is to withstand environmental and service conditions over the design life of the coupling, taking into consideration the full range of maximum to minimum vibratory torque. Flexible coupling design will be evaluated, based on submitted engineering analyses.

1.9.1.2 Torsional Displacement Limiter

Flexible couplings with elastomer or spring type flexible members, whose failure will lead to total loss of propulsion capability of the vessel, such as that used in the line shaft of a single propeller vessel, shall be provided with a torsional displacement limiter. The device is to lock the coupling or prevent excessive torsional displacement when a pre-determined torsional displacement limit is exceeded. Operation of the vessel under such circumstances may be at reduced power. Warning notices for such reduced power shall be posted at all propulsion control stations.

1.9.1.3 Barred Range

Conditions where the allowable vibratory torque or the allowable dissipated power may be exceeded under the normal operating range of the engine shall be identified and shall be marked as a barred range in order to avoid continuous operation within this range.

1.9.1.4 Diesel Generators

Flexible couplings for diesel generator sets shall be capable of INTLREG absorbing short time impact torque due to electrical short-circuit conditions up to 6 (six) times the nominal torque.

1.9.2 Flanged Couplings and Coupling Bolts

Refer to Chapter 3 Sect1[1.11.1.3] for flanged couplings.

Elongation for auxiliary machinery coupling bolts made of steel having an ultimate tensile strength over 690 N/mm^2 (70 kgf/mm^2, 100,000 psi) will be subject to special consideration.

1.10 Testing of Pumps Associated with Engine and Reduction Gear Operation

Pumps associated with engine and reduction gear operation (oil, water, fuel) utilized with engines having bores exceeding 300 mm (11.8 in.) shall be provided with certificates issued by the Surveyor. The following tests shall be conducted to the Surveyor's satisfaction:

1.10.1 Pumps Hydrostatic Tests

Independently-driven pumps shall be hydrostatically tested to 4 bar (4 kgf/cm^2, 57 psi), but not less than 1.5*P*, where *P* is the maximum working pressure in the part concerned.

1.10.2 Capacity Tests

Tests of pump capacities shall be conducted to the satisfaction of the Surveyor with the pump operating at design conditions. Capacity tests will not be required for individual pumps produced on a production line basis, provided the Surveyor is satisfied from periodic inspections and the manufacturer's quality assurance procedures that the pump capacities are acceptable.

1.11 Trial

Before final acceptance, the entire installation shall be operated in the presence of the Surveyor to demonstrate its ability to function satisfactorily under operating conditions and its freedom from harmful vibration at speeds within the operating range. Refer also Part 5A-Chapter4-Sect 6 [6.4]. Chapter 1,Sect1 [1.17]

For conventional propulsion gear units above 1120 kW (1500 HP), a record of gear-tooth contact shall be made at the trials. To facilitate the survey of extent and uniformity of gear-tooth contact, selected bands of pinion or gear teeth on each meshing shall be coated beforehand with copper or layout dye. Refer Part 5A-Chapter3-Sect 6[6.6]

The gear-tooth examination for conventional gear units 1120 kW (1500 HP) and below and all epicyclic gear units will be subject to special consideration. The gear manufacturer's recommendations will be considered.

CHAPTER 3 PROPULSION AND MANEUVERING MACHINERY

CONTENTS

SECTION 1PROPULSION SHAFTING

Contents

1.1 General

The construction of the propellers and propulsion shafting for vessels shall be carried out in accordance with the following requirements and to the satisfaction of the Surveyor.

Definitions

For the purposes of using shaft diameter formulas in this section, the following definitions apply.

1.1.1 Tail Shaft

Tail Shaft is the part of the propulsion shaft aft of the forward end of the propeller end bearing.

1.1.2 Stern Tube Shaft

Stern Tube Shaft or *Tube Shaft* is the part of the propulsion shaft passing through the stern tube from the forward end of the propeller end bearing to the in-board shaft seal.

1.1.3 Line Shaft

Line Shaft is the part of the propulsion shaft in-board of the vessel.

1.1.4 Thrust Shaft

Thrust Shaft is that part of the propulsion shaft which transmits thrust to the thrust bearing.

1.1.5 Oil Distribution Shaft

Oil Distribution Shaft is a hollow propulsion shaft where the bore and radial holes are used for distribution of hydraulic oil in controllable pitch propeller installations.

1.2 Plans and Data to be Submitted

Plans and specifications shall be submitted in accordance with Chapter 1 ,Sect 1[1.4.10],as indicated in the following:

Detailed plans together with material specifications of the propulsion shafting, couplings, coupling bolts, propulsion shafting arrangement, tail shaft bearings and lubrication system, if oil-lubricated, shall be submitted. Calculations shall be included for flexible couplings and demountable couplings. Refer Chapter 2,Sect 1[1.9],Chapter 3, Sect 1[1.11.1.5],Chapter 3,Sect1 [1.12]

1.3 Materials and Testing

1.4.1 Material

Materials for propulsion shafts, couplings and coupling bolts, keys and clutches shall be of forged steel or rolled bars, as appropriate, in accordance with Part 2-Chapter3-Sect 7 and Part 2-Chapter3-Sect 8 of the INTLREG *Rules for Materials and Welding* or other specifications as may be specially approved with a specific design. Where materials other than those specified in the Rules are proposed, full details of chemical composition, heat treatment and mechanical properties, as appropriate, shall be submitted for approval.

1.4.1.1 Ultimate Tensile Strength

In general, the minimum specified ultimate tensile strength of steel used for propulsion shafting is to be selected within the following general limits:

a) Carbon and carbon-manganese steel – 400 to 760 N/mm^2 (41 to 77.5 kgf/mm^2)

b) Alloy steel – not exceeding 800 N/mm^2 (82 kgf/mm^2)

Where it is proposed to use alloy steel, details of the chemical composition, heat treatment and Mechanical properties are to be submitted for approval.

Where shafts may experience vibratory stresses close to the permissible stresses for transient operation, the materials are to have a specified minimum tensile strength of 500 N/mm^2 (51 kgf/mm^2).

1.4.1.2 Elongation

Carbon Steel with elongation (L_O/d = 4) of less than 16% or (L_O/d = 5) of less than 15% shall not to be used for any shafting component, with the exception that material for non-fitted alloy steel coupling bolts manufactured to a recognized standard may have elongation (L_O/d = 4) of not less than 10% or (L_O/d = 5) of not less than 9%.

Alloy steels with elongation less than (L_O/d = 4) 16% or (L_O/d = 5) 15% may be applied subject to approval.

1.4.2 Material Tests

1.4.2.1 General

Materials for all torque-transmitting parts, including shafts, clutches, couplings, coupling bolts and keys shall be tested in the presence of the Surveyor. The materials are to meet the specifications of Part 2-Chapter2-Sect 6 of the INTLREG *Rules for Materials and Welding (Part 2)* or other specifications approved in connection with the design.

1.4.2.2 Alternative Test Requirements

Materials for shafting, couplings and coupling bolts transmitting 373 kW (500 HP) or less will be accepted based on the manufacturer's certified mill tests and hardness check witnessed by the Surveyor. Bolts manufactured to a recognized standard and used as coupling bolts will not require material testing.

1.4.3 Inspection

Shafting and couplings shall be surface-examined at the manufacturer. Tail shafts in the finished machine condition shall be subjected to a nondestructive examination such as magnetic particle, dye penetrant or other nondestructive methods and shall be free of linear discontinuities greater than 3.2 mm ($^1/_8$ in.), except that in the following locations, the shafts shall be free of all linear discontinuities:

1.4.3.1 Tapered Tail Shafts

The forward one-third length of the taper, including the forward end of any keyway and an equal length of the parallel part of the shaft immediately forward of the taper.

1.4.3.2 Flanged Tail Shafts

The flange fillet area.

1.4.4 Weldability

Steel used for tail shafts is to have carbon content in accordance with Part 2-Chapter 2-Sect 6 of the INTLREG *Rules for Materials and Welding (Part 2)*.

1.5 Design and Construction

1.5.1 Shaft Diameters

Using the following equation, the minimum diameter of propulsion shafting is to be determined:

$$D = 100K \times \sqrt[3]{\frac{H}{R}\left(\frac{C1}{U+C2}\right)}$$

where

D = greater of the required solid shaft diameter as required by Sect 1[1.5.1] ,Sect 1[1.12] reflective of static and dynamic stresses), except hollow shaft in.Sect 1[1.5.2]

H = power at rated speed; kW (PS, hp) (1 PS = 735 W; 1 hp = 746 W)

K = shaft design factor, Refer Table 3.1.2 of this section

R = rated speed rpm

U = minimum specified ultimate tensile strength of shaft material (regardless of the actual minimum specified tensile strength of the material, the value of U used in these calculations is not to exceed that indicated in Part 5A/Chapter 4/sect 3/Table 4.3.3; N/mm^2 (kgf/mm^2, psi) c_1 and c_2 are given below:

	SI units	MKS units	US units
c_1	560	41.95	3.695
c_2	160	16.3	23180

Table 3.1.1

Shaft Design Factor *K* for Line Shafts, Thrust Shafts, and Oil Distribution Shafts

Propulsion Type	Design Features (1)							
	Integral Flange	Shrink Fit Coupling	Keyways (refe note2)	Radial Holes, Transverse Holes (refer note 3)	Longitudinal Slots (refer note4)	On Both Sides of Thrust Collars	In way of Axial Bearings used as Thrust Bearings	Straight Sections
Turbine Electric Drives Diesel Drives through slip couplings (electric or hydraulic)	0.95	0.95	1.045	1.045	1.14	1.045	1.045	0.95
All Other Diesel Drives	1.0	1.0	1.1	1.1	1.2	1.1	1.1	1.0

Notes:

1 Geometric features other than those listed will be specially considered

2 After a length of not less than 0.2*D* from the end of the keyway, the shaft diameter may be reduced to the diameter calculated for straight sections.

Fillet radii in the transverse section of the bottom of the keyway shall be not less than 0.0125D

3 Diameter of bore not more than 0.3D

4 Length of the slot not more than 1.4*D,* width of the slot not more than 0.2*D*, whereby *D* is calculated with *k* = 1.0

Table 3.1.2

Shaft Design Factor *K* for Tail Shafts and Stern Tube Shafts (Refer Note 1)

Propulsion Type	*Stern Tube ConfigurIon*	*Propeller Attachment Method* (2)			
		Keyed (3)	*Keyless Attachment by Shrink Fit* (4)	*Flanged* (5)	*Stern Tube Shafts (7, 8)*
All	Oil-lubricated bearings	1.26	1.22	1.22	1.15
All	Water-lubricated bearings with continuous shaft liners or equivalent	1.26	1.22	1.22	1.15
All	Water-lubricated bearings with non-continuous shaft liners(6)	1.29	1.25	1.25	1.18

Notes:

1 The tail shaft diameter may be reduced to the stern tube shaft diameter forward of the bearing supporting the propeller, and the stern tube shaft diameter reduced to the line shaft diameter inboard of the forward stern tube seal. The inboard end of tail shafts or tube shafts within the vessel, as applicable, shall be designed the same as line shafts, with shaft design factors in accordance with Table 3.1.1

2 Other attachments are subject to special consideration.

3 Fillet radii in the transverse section at the bottom of the keyway are not to be less than 0.0125*D*.

4 Refer also Chapter 3,Sect1 [1.9]

5 The fillet radius in the base of the flange for the tail shaft supporting the propeller shall be at least 0.125*D*. Special consideration will be given to fillets of multiple radii design. The fillet radius shall be accessible for nondestructive examination during tail shaft surveys. .

6 For Great Lakes service, *K* factor corresponding to continuous liner configuration may be used.

7 *K* factor applies to shafting between the forward edge of the propeller-end bearing and the inboard stern tube seal.

8 Where keyed couplings are fitted on stern tube shaft, the shaft diameters shall be increased by 10% in way of the coupling. Refer Note 2 of Table 3.1.1

1.5.2 Hollow Shafts

For hollow shafts where the bore exceeds 40% of the outside diameter, the minimum shaft diameter shall not to be less than that given by the following equation:

$$D_o = D \sqrt[3]{\frac{1}{[1-(D_i/D_o)^4]}}$$ …… to be calculated by Iteration

where

D_O = required outside diameter, in mm (in.)

D = solid shaft diameter required by Chapter 3,Sect1 [1.5] as applicable, in mm (in.)

D_i = actual shaft bore, in mm (in.)

1.5.3 Alternative Criteria

As an alternative to the design equations shown in Chapter 3 Sect1 [1.5.1] and Sect 1[1.5.2] , shafting design may be considered for approval on the basis of axial and torsional loads to be transmitted, bending moment and resistance against fatigue. A detailed stress analysis that describes a factor of safety of at least 2.0 for fatigue failure shall be submitted for approval with all supporting data.

1.6 Key

The key material shall be of equal or higher strength than the shaft material. The effective area of the key in shear shall be not less than *A,* given below. The effective area shall be the gross area subtracted by materials removed by saw cuts, set screw holes, chamfer, etc., and is to exclude the portion of the key in way of spooning of the key way

Note:In general ,keyways are not to be used in installations with slow speed,crosshead or two stroke engines with a barred speed range

$$A_{key} = \frac{D^3}{5.1 r_m} \times \frac{Y_s}{Y_k}$$

where

A_{key} = shear area of key; mm^2 (in^2)

D = line shaft diameter; mm (in.); as determined by [1.5.1] of this section

r_m = shaft radius at mid-length of the key; mm (in.)

Y_S = specified yield strength of shaft material; N/mm^2 (kgf/mm^2, psi)

Y_K = specified yield strength of key material; N/mm^2 (kgf/mm^2, psi)

1.7 Tail Shaft Liners

1.7.1 Thickness at Bearings

1.7.1.1 Bronze Liner

The thickness of bronze liners to be fitted to tail shafts or tube shafts shall not to be less than that given by the following equation:

$t = T/25 + 5.1$ mm , $t = T/25 + 0.2$ in.

where

t = thickness of liner, in mm (in.)

T = required diameter of tail shaft, in mm (in.)

1.7.1.2 Stainless Steel Liner

The thickness of stainless steel liners to be fitted to tail shafts or tube shall not to be less than one-half that required for bronze liners or 6.5 mm (0.25 inches), whichever is greater.

1.7.2 Thickness Between Bearings

The thickness of a continuous bronze liner between bearings shall be not less than three-fourths of the thickness, *t,* determined by the foregoing equation.

1.7.3 Continuous Fitted Liners

Continuous fitted liners shall be in one piece or, if made of two or more lengths, the joining of the separate pieces shall be done by an approved method of fusion through not less than two-thirds the thickness of the liner or by an approved rubber seal.

1.7.4 Fit Between Bearings

If the liner does not fit the shaft tightly between the bearing portions, the space between the shaft and liner shall be filled by pressure with an insoluble, non-corrosive compound.

1.7.5 Material and Fit

Fitted liners shall be of a high-grade composition, bronze or other approved alloy, free from porosity and other defects, and are to prove tight under hydrostatic test of 1.0 bar (1 kgf/cm^2, 15 psi). All liners shall be carefully shrunk or forced upon the shaft by pressure and they are not to be secured by pins.

1.7.6 Glass Reinforced Plastic Coating

Glass reinforced plastic coatings may be fitted on propulsion shafting when applied by an approved procedure to the satisfaction of the Surveyor. Such coatings are to consist of at least four plies of cross- woven glass tape impregnated with resin, or an equivalent process. Prior to coating, the shaft shall be cleaned with a suitable solvent and grit-blasted. The shaft shall be examined prior to coating and the first layer shall be applied in the presence of the Surveyor. Subsequent to coating, the finished shaft shall be subjected to a spark test or equivalent to verify freedom from porosity to the satisfaction of the Surveyor. In all cases where reinforced plastic coatings are employed, effective means shall be provided to prevent water having access to the shaft. Provisions shall be made for overlapping and adequately bonding the coating to fitted or clad liners. The end of the liner shall be stepped and tapered as required to protect the end of the wrapping.

1.7.7 Stainless Steel Cladding

Stainless steel cladding of shafts shall be carried out in accordance with an approved procedure. Refer Part 2/chapter 3/section 5

1.8 Tail Shaft Bearings

1.8.1 Water Lubricated Bearings

1.8.1.1 Wood Bearings (resinous, dense hardwoods)

The length of the bearing next to and supporting the propeller shall be not less than four times the required tail shaft diameter.

1.8.1.2 Synthetic Bearings (rubber, reinforced resins, plastic materials)

The length of the bearing next to and supporting the propeller shall be not less than four times the required tail shaft diameter.

For a bearing design substantiated by experimental tests to the satisfaction of INTLREG, consideration may be given to a bearing length of less than four times, but not less than two times, the required tail shaft diameter.

1.8.2 Oil Lubricated Bearings

1.8.2.1 White Metal Lined

The length of white-metal lined, oil-lubricated propeller-end bearings fitted with an approved oil- seal gland shall be on the order of two times the required tail shaft diameter. The length of the bearing may be less, provided the nominal bearing pressure shall not more than 0.80 N/mm^2 (0.0815 kgf/mm^2 116 psi) as determined by static bearing reaction calculation taking into account shaft and propeller weight which is deemed to be exerted solely on the aft bearing, divided by the projected area of the shaft. The minimum length, however, shall not to be less than 1.5 times the actual diameter.

1.8.2.2 Synthetic Bearings (rubber, reinforced resins, plastic etc.)

The length of synthetic rubber, reinforced resin or plastic oil-lubricated propeller end bearings fitted with an approved oil-seal gland shall be on the order of two times the required tail shaft diameter. The length of the bearing may be less, provided the nominal bearing pressure shall not more than

0.60 N/mm^2 (0.0611 kgf/mm^2, 87 psi), as determined by static bearing reaction calculation taking into account shaft and propeller weight which is deemed to be exerted solely on the aft bearing, divided by the projected area of the shaft. The minimum length, however, shall not to be less than 1.5 times the actual diameter. Where the material has demonstrated satisfactory testing and operating experience, consideration may be given to increased bearing pressure.

Means are to be provided to prevent rotation of the lining within the bush during operation

1.9 Tail Shaft Propeller End Design

Tail shafts shall be provided with an accurate taper fit in the propeller hub, particular attention being given to the fit at the large end of the taper.

1.9.1 Keyed

The key is to fit tightly in the keyway and be of sufficient size to transmit the full torque of the shaft, but it shall not to extend into the liner counter bore on the forward side of the hub. The forward end of the keyway shall be so cut in the shaft as to give a gradual rise from the bottom of the keyway to the surface of the shaft. Ample fillets shall be provided in the corners of the keyway and, in general, stress concentrations are to be reduced as far as practicable.

1.9.2 Keyless

Where propellers are fitted without keys, detailed stress calculations and fitting instructions shall be submitted for review.

1.10 Flexible Couplings

Refer Chapter 2, Sect1 [1.9.1]

1.11 Solid Couplings

1.11.1 Fitted Bolts

The minimum diameter of fitted shaft coupling bolts is to be determined using the equation given below. The bolts are required to be assembled with an interference fit.

$$d_b = 0.65\sqrt{\frac{{D_{shm}}^3\ (U+c)}{N\ B_{bc}\ U_b}}$$

where

B_{bc} = bolt circle diameter; mm (in.)

c = constant, as given below

	SI unit	MKS unit	US unit
c	160	16.3	23,180

d_b = diameter of bolt at joints; mm (in.)

D_{shm} = minimum required shaft diameter designed considering the largest combined torque (static and dynamic), acting at the shaft in vicinity of the respective coupling flanges; mm (in), Refer Sect1[1.12] of this chapter but not less than the minimum required line shaft diameter (Refer [1.5] of this section); mm (in.)

N = number of bolts fitted in one coupling

U = minimum specified tensile strength of shaft material, as defined in Part 5A-Chapter 4-Sect 3[3.1] of this section; N/mm^2 (kgf/mm^2, psi)

U_b = minimum specified tensile strength of bolt material; N/mm^2 (kgf/mm^2, psi), subject to the following conditions:

a) Selected bolt material is to have minimum specified tensile strength U_b at least equal to U.

Regardless of the actual minimum tensile strength, the value of U_b used in these calculations is not to exceed 1.7U nor 1000 N/mm^2 (102 kgf/mm^2, 145,000 psi)

1.11.2 Non-fitted Bolts

The diameter of pre-stressed, non-fitted coupling bolts will be considered upon the submittal of detailed preloading and stress calculations and fitting instructions. The tensile stress on the bolt due to pre-stressing and astern pull shall not to exceed 90% of the minimum specified yield strength of the bolt material. In addition, the bearing stress on any member such as the shaft, bolt, threads or nut shall not to exceed 90% of the minimum specified yield strength of the material for that member.

1.11.2.1 Power Transmitted by Pre-stress Only

Where bolts are under pure tension, the factor of safety against slip under the worst of the operating conditions, including mean transmitted torque plus vibratory torque

due to torsional loads, shall be at least as follows:

a) Inaccessible couplings (external to the hull or not readily accessible)=2.8

b) Accessible couplings (internal to the hull) =2.0

1.11.2.2 Power Transmitted by Combination Pre-stress and Shear

Where the power is transmitted by a combination of fitted bolts and pre-stressed, non-fitted bolts, the components are to meet the following criteria:

1.11.2.2(a) Fitted Bolts. The shear stress under the maximum torque corresponding to the worst loaded condition shall be not more than 50% of the minimum specified tensile yield strength of the bolt material.

1.11.2.2(b) Non-Fitted Bolts. The factor of safety against slip under the maximum torque corresponding to the worst loaded condition and the specified bolt tension shall be at least 1.6 for inaccessible couplings and 1.1 for accessible couplings.

1.11.2.2.1 Dowels Used for Transmitting Power

Dowels connecting the tail shaft flange to the controllable pitch propeller hub, utilized with non- fitted bolts to transmit power, are considered equivalent to fitted coupling bolts and are to comply with Sect 1[1.11.1] and, if applicable,Sect1 [1.11.2]The dowels shall be accurately fitted and effectively secured against axial movement. The coupling shall be satisfactory for astern condition.

1.11.3 Flanges wrong numbering

The thickness of coupling flanges integral to the shaft shall not to be less than the minimum required diameter of the coupling bolts or 0.2 times *D* (as defined in Part 5A-4-3/(3.1), whichever is greater. The fillet radius at the base of an integral flange shall not to be less than 0.08 times the actual shaft diameter. Consideration will be given to fillets of multiple radii design; and such fillet is to have a cross-sectional area of not less than that of a required single-radius fillet. The surface finish for fillet radii shall not to be rougher than 1.6 μmeters (63 μin.) RMS.

For the tail shaft flange supporting the propeller, the fillet radius at the base of the flange is to be at least 0.125D. Special consideration will be given to fillets of multiple-radius design; refer (a) above. During tailshaft surveys, the fillet radius is to be accessible for nondestructive examination.

1.11.4 Locking Arrangement

After assembly, all coupling bolts and associated nuts shall be fitted with locking arrangement.

1.11.5 Demountable Couplings

Couplings shall be made of steel or other approved ductile material. The strength of demountable couplings and keys shall be equivalent to that of the shaft. Couplings shall be accurately fitted to the shaft. Where necessary, provisions for resisting thrust loading shall be provided.

Hydraulic and other shrink fit couplings will be specially considered upon submittal of detailed preloading and stress calculations and fitting instructions. In general, the torsional holding capacity shall be at least 2.8 times the transmitted mean torque plus vibratory torque

due to torsional vibration.

For accessible couplings (internal to hull), this factor may be reduced 2.0 times. Under normal working conditions, the preload stress is based on the maximum available interference fit (or maximum pull-up length) i.e. not to exceed 70% of the minimum specified yield strength.

The following friction coefficients are to be used:

- Oil injection method of fit: 0.13
- Dry method of fit: 0.18

1.12 Propulsion Shaft Alignment and Vibration

1.12.1 General

Propulsion shafting shall be aligned with the location and spacing of the shaft bearings, being such as to give acceptable bearing reactions and shaft bending moments and also acceptable amplitudes of vibration for all conditions of vessel loading and operation.

The designer or the builder is to evaluate the propulsion shafting system, taking into consideration any forces or factors which may affect the reliability of the propulsion shafting system, including weight of the propeller and shafts, hydrodynamic forces acting on the propeller, number of propeller blades in relation to diesel engine cylinders, misalignment forces, thermal expansion, flexibility of engine and thrust bearing foundations, engine induced vibrations, gear tooth loadings, flexible couplings, effect of power take-off arrangements from the propulsion shafting system driving auxiliaries, etc., as applicable, as well as any limits for vibrations and loadings specified by the equipment manufacturers.

1.12.2 Vessels 61 m (200 ft) in Length and Over

1.12.2.1 Shaft Alignment Calculations

The requirements in Part 5A-Chapter4-Sect 4[4.2] of the *INTLREG Rules for Building and Classing Steel Vessels* shall be complied with.

1.12.2.2 Torsional Vibrations

The requirements in Part 5A-Chapter4-Sect 4[4.5]. of the *INTLREG Rules for Building and Classing Steel Vessels* shall be complied with.

1.12.2.3 Axial Vibrations

The requirements in Part 5A-Chapter4-Sect 4[4.6]. of the *INTLREG Rules for Building and Classing Steel Vessels* shall be complied with.

1.12.2.4 Lateral (Whirling) Vibrations

The requirements in Part 5A-Chapter4-Sect [4.7] of the *INTLREG Rules for Building and Classing Steel Vessels* shall be complied with.

1.12.2.5 Cast Resin Chocks

Resin chocks and their installation are to comply with the requirements in Part 5A. Chapter4-Sect 6[6.1.2] of the *INTLREG Rules for Building and Classing Steel Vessels.*

1.12.3 Vessels Below 61 m (200 ft) in Length

1.12.3.1 Torsional Vibration

For vessels fitted with an unusual propulsion arrangement or without vibration dampers, a torsional vibration analysis of the propulsion system showing compliance with Part 5A-Chapter 4-Sect 6 [6 .2.1] of the *INTLREG Rules for Building and Classing Steel Vessels* shall be submitted. This shall not required for vessels under 20 m (65 ft) in length or where the installation is essentially the same as previous designs which have been proven satisfactory.

1.13 Circulating Currents

Where means are provided to prevent circulating currents from passing between the propeller, shaft and the hull, a warning notice plate shall be provided in a visible place cautioning against the removal of such protection

1.14 Tailshaft Condition Monitoring (TCM)

1.14.1 Notation

Where requested by the Owner, the class notation TS(CM),Tailshaft Condition Monitoring may be assigned to a vessel with tail shafts specifically arranged with oil-lubricated stern tube bearings, provided the following requirements are complied with.

1.14.2 System Requirements

In addition to the requirements for propulsion shafting in Chapter 3,Sect 1 the following design requirements shall be complied with and relevant drawing(s) and data shall be submitted for review and approval prior to commencement of the initial surveys as specified in Sect1 [1.14.4.1] below

1.14.2.1 Temperature Monitoring and Alarm

The vessel shall be provided with a temperature monitoring and alarm system for the tail shaft stern tube aft bearing. The system shall be arranged with a high temperature alarm and two sensors. One easily interchangeable sensor may be installed in lieu of the two sensors. Where one interchangeable sensor is installed, one spare sensor shall be carried onboard the vessel.

The monitoring and alarm system is to have the following features:

a) The main alarm system shall be provided with a power failure alarm.

b) An alarm that indicates an open circuit, a short circuit, or an earth fault in the temperature sensor circuit shall be provided

c) An alarm indicating that the sensor's temperature signal is outside the set points of the unit shall be provided.

Temperature monitoring and the alarm system shall be located in the propulsion machinery spaces. For machinery spaces assigned with (CCS, Centralized Control Station notation), the temperature monitoring and alarm system shall be incorporated with the required control and monitoring system.

When a centralized control or monitoring station is installed, the alarms shall be activated in such a station.

1.14.2.2 Oil Seal Design

Approved type oil seals shall be used which will allow for replacement without the

shaft withdrawal or removal of the propeller.

1.14.2.3 Bearing Wear Down Measurement

Arrangements and means shall be provided for bearing wear down measurement.

1.14.3 Management of the Monitored Data

The following management of the monitored data shall be implemented.

1.14.3.1 Lubrication Oil Sampling

Stern tube bearing lubricating oil shall be sampled monthly under service conditions, and analyzed for water content using a suitable on-board test kit. Additionally, at least every six months, oil samples shall be submitted for analysis to a recognized laboratory where testing shall be conducted for the following:

a) Free water content in oil, if present

b) Bearing metals content (Pb, Fe, Cu, Al, Cr, Sn, Si, Ni)

c) Viscosity at 40°C

1.14.3.2 Stern Tube Bearings Operating Condition

Stern tube bearing temperatures shall be monitored and temperature recorded daily. The system's oil consumption shall be recorded monthly.

1.14.3.3 Recording and Analysis

The chief engineer is responsible for recording and maintaining a file of the shipboard performed lubricating oil sampling and analysis results, as well as stern tube bearings operating condition. Also, the results of the laboratory analysis shall be stored within the file onboard. All documentation shall be available to the Surveyor to allow for trend assessment of the measured parameters.

The shipboard record is to contain conclusions regarding the condition of the oil and whether it remains suitable for further use. Conclusions shall be supported by comparative parameters.

In case of oil replacement, a record containing the reason for replacement of the oil shall be maintained for Surveyor's review at the next Annual Survey.

1.14.4 Surveys

1.14.4.1 Initial Survey

All systems in Sect 1[1.14] shall be examined and tested to the satisfaction of the attending Surveyor in accordance with the approved plans.

1.14.4.2 Periodical Survey Requirements

Refer Part 1-chapter 3

SECTION 2 PROPELLERS

Contents

2.1 General

The construction of the propellers and propulsion shafting for vessels shall be carried out in accordance with the following requirements and to the satisfaction of the Surveyor. Upon satisfactory compliance with the requirements, a notation will be made in the *Record* indicating the type of propeller and the material of which it is made.

Definitions

For purpose of this section, the following definitions apply.

2.1.1 Skew Angle

Skew Angle (θ) of a propeller is the angle measured from ray 'A' passing through the tip of blade at mid-chord line to ray 'B' tangent to the mid-chord line on the projected blade outline. Refer Chapter 3 Sect 2 Figure 3.2.1

2.1.2 Highly Skewed Propeller

A *Highly Skewed Propeller* is one whose skew angle is more than 25°.

2.1.3 Propeller Rake

(a) Rake. *Rake* is the distance at the blade tip between the generating line and the line perpendicular to the propeller axis that meets the generating line at the propeller axis. Refer Chapter 3 Sect 2 Figure 3.2.2

(b) Rake Angle (∅). *Rake Angle* of a propeller is the angle measured from the plane perpendicular to shaft centerline to the tangent to the generating line at a specified radius (0.6 x radius for the purpose of this section). Refer Chapter 3 Sect 2 Figure 3.2.2

2.1.4 Wide Tipped Blade Propeller

A propeller blade shall be considered as a wide tipped blade if the maximum expanded blade cord length occurs at or above 0.8*R*, with *R* being the distance measured from the centerline of the propeller hub.

2.2 Small Conventional Propellers

For planning and semi-planning vessels, the propellers need not to be designed and constructed in accordance with these requirements, provided they do not exceed 1.5 m (60 in.) in diameter and are part of a manufacturer's standard product line. In such instances, neither the Surveyor's attendance for the material testing and inspection nor the design review will be required.

2.3 Plans and Data to be Submitted

Plans and specifications shall be submitted in accordance with Chapter 1,Sect 1[1.4.8] as indicated in the following:

2.1.5 Fixed-Pitch Propellers

Where the propeller blades are of conventional design, a propeller plan giving the design data and characteristics of the material, as required by Part 5A-Chapter 5-Sect 1[1.3],Chapter 3, Sect 1[1.4.8] shall be submitted. For skewed propellers or propeller blades of unusual design, a detailed stress analysis is also to be submitted as required by Ch 3,Sect [2.5.2] and Chapter 3[2.6.2] . For keyless propellers, Refer Chapter 3,Sect 2[2.10.2]

2.1.6 Controllable-Pitch Propellers

In addition to the plan and data required in Sect 2[2.1.5] above for the propeller blade, plans of the propeller hub, propeller blade flange and bolts, internal mechanisms, hydraulic piping control systems, and instrumentation and alarm system shall be submitted. Strength

calculations shall be included for the internal mechanism. Refer Part 5A-Chapter 5-Sect 3[3.6].Chapter 3 Sect 2[2.8]

2.4 Materials and Testing

2.1.7 Propeller Material

For propellers required to be of an approved design, Chapter 3 Sect 2/Table 3.2.1 below shows the properties of materials normally used for propellers. Refer Part 5A-Chapter 5-Sect 2[2.1] and Section Part 2-Chapter4-Sect 6 of the INTLREG *Rules for Materials and Welding (Part 2)* for full details of the materials.

Where an alternative material specification is proposed, detailed chemical composition and mechanical properties shall be submitted for approval (for example, Refer Sections Part 2-Chapter4-Sect 6 and Sect 2[2-2-8] of the above referenced Part 2). The *f* and *w* values of such materials to be used in the equations hereunder will be specially considered upon submittal of complete material specifications including corrosion fatigue data to 10^8 cycles.

TABLE 3.2.1

Propeller Materials

		Tensile Strength			*Yield Strength*			*Elongation, %*	
								Gauge Length	
Type	*Material*	*N/mm²*	*kgf/mm²*	*lb/in²*	*N/mm²*	*kgf/mm²*	*lb/in²*	*4d*	*5d*
2	Manganese bronze	450	46	65,000	175	18	25,000	20	18
3	Nickel-manganese bronze	515	53	75,000	220	22.5	32,000	18	16
4	Nickel-aluminum bronze	590	60	86,000	245	25	36,000	16	15
5	Manganese-nickel-aluminum bronze	630	64	91,000	275	28	40,000	20	18
CF-3	Stainless steel	485	49	70,000	205	21	30,000	35	32

2.1.8 Stud Materials

The material of the studs securing detachable blades to the hub shall be of at least Grade 2 forged steel or equally satisfactory material; Refer Part-2, Chapter-2, Sect-6,[6.4] for specifications of Grade 2 forged steel.

2.1.9 Material Testing

Materials of propellers cast in one piece and materials of blades, hub, studs and other load-bearing parts of controllable pitch propellers shall be tested in the presence of a Surveyor. For requirements of material testing, Refer Part-2, Chapter-4, Sect-6, [6.2] and Part-2, Chapter-2, Sect-8 and Part-2, Chapter-2, Sect-6, [6.4].

2.5 Blade Design

2.5.1 Blade Thickness

The thickness of the propeller blades of conventional design (θ ≤ 25°) should not be less than that determined by the equations given below.

Propeller blades of thrusters (as defined in Part 5A-Chapter-7, Sect-1[1.3]) and wide – tip blades of ducted propellers are required to be in accordance with the provisions of Part 5A/chapter 7

2.5.1.1 Fixed-Pitch Propellers

$$t_{0.25} = S\left[K_1\sqrt{\frac{AH}{C_n CRN}} \pm \left(\frac{C_s}{C_n}\right)\left(\frac{BK}{4C}\right)\right]$$

$$A = 1.0 + \frac{6.0}{P_{0.70}} + 4.3P_{0.25}$$

$$B = \left(\frac{4300wa}{N}\right)\left(\frac{R}{100}\right)^2\left(\frac{D}{20}\right)^3$$

$$C = (1 + 1.5P_{0.25})(Wf - B)$$

where (units of measures are given in SI (MKS, and US) units respectively

S = 1.0. for all propellers with $D \leq 6.1$ m (20 ft)

= $\sqrt{(D+24.0)/30.1}$ SI, MKS units, or

= $\sqrt{(D+79)/99}$ US units for solid propellers with $D > 6.1$ m (20 ft). S is not to exceed 1.025.

$t_{0.25}$ = required thickness at the one-quarter radius, in mm (in.)

K_1 337 (289, 13)

H power at rated speed, kW (hp, HP)

hp metric horsepower

HP US horsepower

R rpm at rated speed

N number of blades

$P_{0.25}$ = pitch at one-quarter radius divided by propeller diameter

$P_{0.7}$ = pitch at seven-tenths radius divided by propeller diameter, corresponding to the design ahead conditions

W = expanded width of a cylindrical section at the 0.25 radius, in mm (in.)

a = expanded blade area divided by the disc area

D = propeller diameter, in m (ft)

K = rake of propeller blade, in mm (in.) (positive for aft rake and negative for forward rake)

$C_S = a_S/WT$ (section area coefficient at the 0.25 or 0.35 radius). Also Refer below.

$C_n = I_o/U_f WT^2$ (section modulus coefficient at the 0.25 or 0.35 radius). Also Refer below.

I_o = moment of inertia of the expanded cylindrical section at 0.25 or 0.35 radius about a straight line through the center of gravity parallel to the pitch line or to the nose-tail line, in mm^4 (in^4)

A_S = area of expanded cylindrical section at the 0.25 or 0.35 radius, in mm^2 (in^2)

U_f = maximum normal distance from the moment of inertia axis to points on the face boundary (tension side) of the section, in mm (in.)

T = maximum thickness at the 0.25 or 0.35 radius, in mm (in.), from propeller drawing

f,w = material constants from the following table:

Type	*Representative Propeller Materials (Refer Part 2, Chapter 3)*	*SI and MKS Units*		*US Customary Units*	
		f	*w*	*f*	*w*
2	Manganese bronze	2.10	8.30	68	0.30
3	Nickel-manganese bronze	2.13	8.00	69	0.29
4	Nickel-aluminum bronze	2.62	7.50	85	0.27
5	Mn-Ni-AI bronze	2.37	7.50	77	0.27
	Cast steel	2.10	8.30	68	0.30
CF-3	Austenitic stainless steel	2.10	7.75	68	0.28

Note: The *f* values of materials not covered will be specially considered upon submittal of complete material specifications including corrosion fatigue data to 10^8 cycles.

The values of C_S and C_n, computed as stipulated above, shall be indicated on the propeller drawing. If the C_n value exceeds 0.10, the required thickness shall be computed with C_n = 0.10.

For vessels below 61 m (200 ft) in length, the required thickness may be computed with the assumed values of C_n = 0.10 and C_S = 0.69.

2.5.1.2 Controllable-Pitch Propellers

The thickness of the controllable pitch propeller blades of conventional design (θ ≤ 25°) should not be less than determined by the equations given below

$$t_{0.35} = K_2 \sqrt{\frac{AH}{C_n CRN}} \pm \left(\frac{C_s}{C_n}\right)\left(\frac{BK}{6.3C}\right)$$

$$A = 1.0 + \frac{6.0}{P_{0.70}} + 3P_{0.35}$$

$$B = \left(\frac{4900wa}{N}\right)\left(\frac{R}{100}\right)^2\left(\frac{D}{20}\right)^3$$

$$C = (1 + 0.6P_{0.35})(Wf - B)$$

Where

$t_{0.35}$ = required thickness at the 0.35 radius, in mm (in.)

K_2 = 271 (232, 10.4)

$P_{0.35}$ = pitch at 0.35 radius divided by propeller diameter, corresponding to the design ahead conditions

W = expanded width of a cylindrical section at the 0.35 radius, in mm (in.)

H, R, N, $P_{0.7}$, a, D, K, C_S, C_n, f, and w are as defined in Chapter 3,[Sect 2[2.5.1.1] above

2.5.1.3 Nozzle Propellers (Wide Tip Blades)

The minimum required blade thickness at 0.35 radius, $t_{0.35}$, is to be determined using following equations:

$$t_{0.35} = K_3 \sqrt{\left(\frac{AH}{C_n CRN}\right)} \pm \left(\frac{C_s}{C_n}\right)\left(\frac{BK}{5.6C}\right) \quad \text{mm (in.)}$$

where

A = $1.0 + (6.0/P_{0.7}) + 2.8P_{0.35}$ (free running)

= $7.2 + (2.0/P_{0.7}) + 2.8P_{0.35}$ (bollard, APS, dynamic positioning)

B = $(4625wa/N)(R/100)^2(D/20)^3$

C = $(1 + 0.6P_{0.35})(Wf - B)$

$t_{0.35}$ = required thickness at the 0.35 radius, in mm (in.)

K_3 = 288 (247, 11.1)

$P_{0.35}$ = pitch at 0.35 radius divided by propeller diameter, corresponding to the design ahead conditions

W = expanded width of a cylindrical section at the 0.35 radius, in mm (in.)

H, R, N, $P_{0.7}$, a, D, K, C_S, C_n, f, and w are as defined in 5A-7-3/3.2.2(d) and table 5.3.1 of Part 5A

A propeller blade shall be considered as a wide tipped blade if the maximum expanded blade cord length occurs at or above 0.8R, with R being the distance measured from the centerline of the propeller hub.

2.5.2 Blades of Unusual Design

Propellers of unusual design or application will be subject to special consideration upon submittal of detailed stress calculations.

2.5.3 Blade-root Fillets

Fillets at the root of the blades are not to be considered in the determination of blade thickness.

2.5.4 Built-up Blades

The required blade section shall not to be reduced in order to provide clearance for nuts. The face of the flange shall bear on that of the hub in all cases, but the clearance of the spigot in its counter bore or the edge of the flange in the recess shall be kept to a minimum.

2.6 Skewed Propeller Blades

2.6.1 Definitions

2.6.1.1 Maximum Skew Angle

Maximum skew angle (θ) is measured from ray A passing through the tip of blade to ray B tangent to the mid-chord line of the projected blade outline. Refer Figure .3.2.1

2.6.1.2 Rake Angle

Rake angle (φ) for the purpose of this Subsection is the angle measured from the plane perpendicular to shaft centerline to the tangent to generating line at 0.6 radius. Refer Figure .3.2.2

2.6.2 Application

2.6.2.1 θ ≤ 25°

The requirements in Ch3,[2.5.1]are applicable where the maximum skew angle is 25 degrees or less.

2.6.2.2 25° < θ ≤ 50°

The requirements in Sect 2 [2.6.3] may be used for fixed pitch propellers of INTLREG Type 4 material having skew angle over 25 degrees but not exceeding 50 degrees. For other material/type propellers, calculations as required in Sect 2 [2.6.2.3] shall be submitted.

2.6.2.3 θ > 50°

Propellers with the maximum skew angle exceeding 50 degrees will be subject to special consideration upon submittal of detailed stress calculations.

The maximum stress occurring during steady or transient astern operations shall not to exceed seventy percent of the minimum specified yield strength of the propeller material.

2.6.3 Propellers Over 25° up to 50° Skew Angle

This paragraph applies to fixed pitch propellers of INTLREG Type 4 material having a maximum skew angle over 25 degrees but not exceeding 50 degrees.

2.6.3.1 Blade Thickness at 0.25 Radius

The maximum thickness at 0.25 radius shall not to be less than the thickness required in Part 5A-5-3/[3.3.1] multiplied by the factor *m,* as given below:

$$m = \sqrt{1 + 0.0065\,(\theta - 25)}$$

2.6.3.2 Blade Thickness at 0.6 Radius

The maximum thickness at 0.6 radius shall be not less than that obtained from the following equation:

$$t_{0.6} = K\sqrt{(1 + C_{0.9})(1 + 2C_{0.9} / C_{0.6})[(HD\Gamma)/(RP_{0.6}Y)]^{0.5}}$$

where

$t_{0.6}$ = required thickness at the 0.6 radius, in mm (in.)

K = 12.6 (6.58, 1.19)

$C_{0.9}$ = expanded chord length at the 0.9 radius divided by propeller diameter

$C_{0.6}$ = expanded chord length at the 0.6 radius divided by propeller diameter

Γ = $[1 + (\theta - 25)/\theta][\varphi_2 + 0.16\varphi\theta P_{0.9} + 100]$

θ = skew angle in degrees (Refer Sect 2[2.6.1.1]and Figure 3.2.1)

φ = rake angle in degrees (Refer Sect [2.6.1.2] and Figure 3.2.2, positive for rake aft

$P_{0.6}$ = pitch at the 0.6 radius divided by propeller diameter

$P_{0.9}$ = pitch at the 0.9 radius divided by propeller diameter

Y = minimum specified yield strength of INTLREG Type 4 propeller material, in N/mm^2 (kgf/mm^2, psi) H, D, R are as defined in Chapter 3 Sect [2.5.1]

2.6.3.3 Blade Thickness Between 0.6 and 0.9 Radius

2.6.3.3(a) Maximum Thickness. The maximum thickness between 0.6 and 0.9 radius shall not to be less than that obtained from the following equation.

$$t_x = 3.3D + 2.5(1 - x)(t_{0.6} - 3.3D) \text{ mm}$$

$$t_x = 0.04D + 2.5(1 - x)(t_{0.6} - 0.04D) \text{ in.}$$

t_X = required maximum blade thickness at radius ratio x

$t_{0.6}$ = blade thickness at 0.6 radius, as required by Sect 2 [2.6.3.2]above

x = ratio of the radius under consideration to $D/2$, $0.6 < x \leq 0.9$

2.6.3.3(b) Trailing Edge Thickness at 0.9 Radius. The edge thickness measured at 5% of chord length from the trailing edge shall be not less than 30% of the maximum blade thickness required by Part 5A-5-3/3.3.1(d) above at that radius.

FIGURE 3.2.1

Maximum Skew Angle

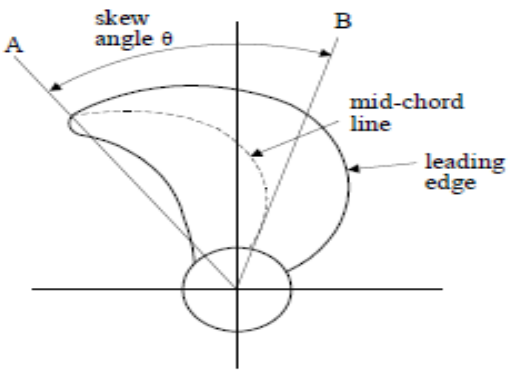

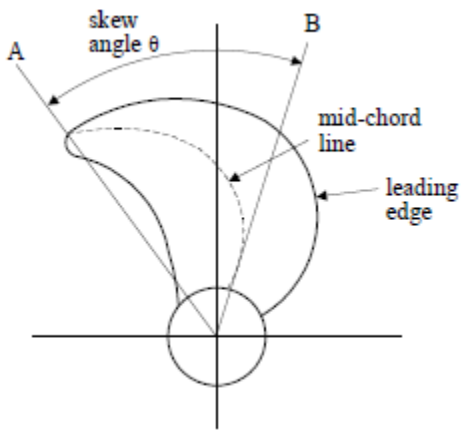

FIGURE 3.2.2

Rake Angle at the 0.6 Radius, Positive Aft

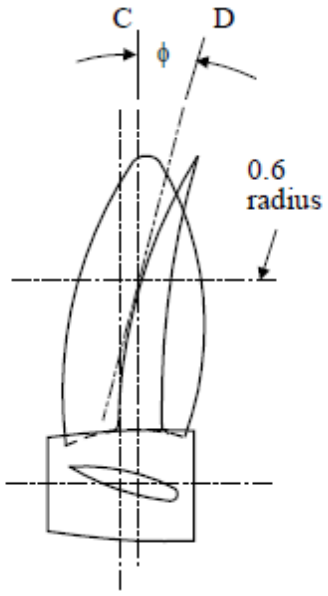

The rake angle ϕ, measured at 0.6 radius, is formed between line *D*, which is tangent to the generating line, and the line *C*, which is perpendicular to the propeller shaft centerline.

2.7 Studs

2.7.1 Stud Area

The sectional area of the studs at the bottom of the thread shall be determined by the following equation

	SI units	MKS units	US units
s	$\frac{0.056\ W\ k\ f\ t_{0.35}^{2}}{r\ n}$ mm²		$\frac{0.0018\ W\ k\ f\ t_{0.35}^{2}}{r\ n}$ in²
k	$\frac{621}{U + 207}$	$\frac{63.3}{U + 21.1}$	$\frac{90000}{U + 30000}$

Where

s = area of one stud at bottom of thread
n = number of studs on driving side of blade
r = radius of pitch circle of the studs; mm (in.)
k = material correction factor for stud materials better than IRS Grade 2 forged steel
U = ultimate tensile strength of the stud material; N/mm² (kgf/mm², psi)
$t_{0.35}$ = required minimum thickness of the thickest part of the blade section at 0.35 radius; mm (in.)
W = expanded width of a cylindrical section at 0.35 radius; mm (in.)
f = material constants from the table below:

Value of 'f'		
Material type (refer Part 5A/Ch 5/Sec-2, [2.1])	**SI and MKS units**	**US units**
2	2.1	68
3	2.13	69
4	2.62	85
5	2.37	77
CF-3	2.1	68
Note: The '**f**' values of materials not covered will be specially considered upon the submission of complete material specifications including corrosion fatigue data to 10^8 cycles.		

2.7.2 Fit of Studs and Nuts

Studs shall be fitted tightly into the hub and provided with effective means for locking. The nuts are also to have a tight-fitting thread and be secured by stop screws or other effective locking devices.

2.8 Blade Flange and Mechanisms

The strength of the propeller blade flange and internal mechanisms of controllable-pitch propellers subjected to the forces from propulsion torque shall be at least 1.5 times that of the blade at design pitch conditions.

2.9 Controllable Pitch Propeller System

2.9.1 Blade Pitch Control

2.9.1.1 Bridge Control

Where the navigation bridge is provided with direct control of propulsion machinery, it shall be fitted with means to control the pitch of the propeller.

2.9.1.2 Duplication of Power Unit

At least two hydraulic power pump units shall be provided for the pitch actuating system and arranged so that transfer between the pump units can be readily effected. For propulsion machinery spaces intended for unattended operation (**UM** notation), automatic start of the standby pump unit shall be provided. The emergency pitch actuating system [as required by Sect 2[2.9.1.3] (iii) below, may be accepted as one of the required hydraulic power pump units, provided it is no less effective.

2.9.1.3 Emergency Provisions

To safeguard the propulsion and maneuvering capability of the vessel in the event of any single failure in either the remote pitch control system or the pitch actuating system external to the propeller shaft and oil transfer device (also known as oil distribution box), the following shall be provided:

i) Manual control of pitch at or near the pitch-actuating control valve (usually the directional valve or similar).

ii) The pitch is to remain in the last ordered position until the emergency pitch actuating system is brought into operation.

iii) An emergency pitch actuating system. This system shall be independent of the normal actuating system up to the oil transfer device, provided with its own oil reservoir and able to change the pitch from full ahead to full astern.

2.9.1.4 Integral Oil Systems

Where the pitch actuating hydraulic system is integral with the reduction gear lubricating oil system and/or clutch hydraulic system, the piping shall be arranged such that any failure in the pitch actuating system will not leave the other system(s) non-operational.

2.9.1.5 Provisions for Testing

Means shall be provided in the pitch actuating system to simulate system behavior in the event of loss of system pressure. Hydraulic pump units driven by main propulsion machinery shall be fitted with a suitable by-pass for this purpose.

2.9.1.6 Multiple Propellers

For vessels fitted with more than one controllable pitch propeller, each of which is independent of the other, only one emergency pitch actuating system [as required by Sect [2.9.1.3](iii) above,need be fitted, provided it is arranged such that it can be used to provide emergency pitch-changing capability for all of the propellers.

2.9.1.7 Hydraulic Piping

Hydraulic piping should meet the requirements of Chapter 4,Sect [6.1] and Chapter 4, Sect 2[2.2.5]

2.9.2 Instrumentation and Alarms

The following instruments and alarms shall be provided.

2.9.2.1 Pitch Indicators

Each station capable of controlling the propeller pitch shall be fitted with a pitch indicator. In addition, a pitch indicator shall be fitted on the navigation bridge for vessels 500 gross tons and above.

2.9.2.2 Low Oil Pressure

Visual and audible alarms shall be provided in the engine room control station to indicate low hydraulic oil pressure.

2.9.2.3 High Oil Pressure

Visual and audible alarms shall be provided in the engine room control station to indicate high hydraulic oil pressure. The alarm shall be set below relief valve pressure.

2.9.2.4 High Temperature

Visual and audible alarms shall be provided in the engine room control station to indicate high hydraulic oil temperature.

2.9.3 Electrical Components

Electrical components are to meet the applicable requirements of Part 6, Chapter 8.

2.10 Propeller Fitting

2.10.1 Keyed Fitting

For shape of the keyway in the shaft and the size of the key, Refer Chapter 3 Sect 1[1.9.1]

2.10.2 Keyless Fitting

The formulas specified below apply to the ahead condition, but they will also provide adequate safety margin for the astern condition. The astern condition shall be considered if the astern torque exceeds the ahead torque. The formulas are applicable for solid propeller shafts only.

2.10.2.1 Design Criteria at 35°C (95°F)

The minimum required contact surface (grip) pressure, P_{min}, at 35°C (95°F) and the corresponding minimum pull-up length, δ_{min}, shall be determined by the following equations:

$$P_{min} = \frac{ST}{AB}\left[-S\tau + \sqrt{\mu^2 + B\left(\frac{F_v}{T}\right)^2}\right] \quad \text{N/mm}^2 \text{ (kgf/mm}^2\text{, psi)}$$

$$\delta_{min} = P_{min}\frac{D_s}{2\tau}\left[\frac{1}{E_b}\left(\frac{K^2+1}{K^2-1}+\nu_b\right)+\frac{1}{E_s}(1-\nu_s)\right] \quad \text{mm (in.)}$$

If the rated propeller thrust, *T,* shall not known, it can be estimated as the thrust of a free running vessel, using the following equations, whichever yields the greater value of p_{min}

$$T = \frac{c_1 H}{V} \quad \text{or} \quad T = \frac{c_2 \times 10^6 H}{PR} \quad \text{N (kgf, lbf)}$$

Design Criteria at 0°C (32°F)

The maximum permissible contact surface (grip) pressure, P_{max}, at 0°C (32°F), and the corresponding maximum permissible pull-up length, δ_{max}, shall be determined from the following equation

$$P_{max} = \frac{\sigma_E (K^2-1)}{\sqrt{3K^4+1}} \quad \text{N/mm}^2 \text{ (kgf/mm}^2\text{, psi)}$$

$$\delta_{max} = \frac{P_{max}}{P_{min}}\delta_{min} \quad \text{mm (in.)}$$

Design Criteria at Fitting Temperature

The pull-up length, δ_r , at temperature *t*, where *t* < 35°C (95°F), and the corresponding contact surface (grip) pressure, P_r, shall be determined by the

following equations:

$$\delta_t = \delta_{\min} + \frac{D_s}{2\tau}(\alpha_b - \alpha_s)(t_{ref} - t) \qquad \text{mm (in.)}$$

$$P_t = P_{\min}\frac{\delta_t}{\delta_{\min}} \qquad \text{N/mm}^2 \text{ (kgf/mm}^2\text{, psi)}$$

The minimum push-up load, W_t, at temperature t is to be as follows:

$$W_t = AP_t(\mu + \tau) \qquad \text{N (kgf, lbf)}$$

The variables and constants used are defined as follows:

c = coefficient, dependent on the type of propulsion drive

= 1.0 for turbines, geared diesel drives, electric drives and direct diesel with a hydraulic, electromagnetic or high elasticity coupling.

= 1.2 for a direct diesel drive.

Higher values may be necessary for cases where extremely high pulsating torque is expected in service.

c_1 = constant = 1760 (132, 295)

c_2 = constant = 57.3 (4.3, 0.38)

t = fitting temperature; °C (°F); $t < t_{ref}$ = 35°C (95°F)

which are the outer diameters of boss corresponding to D_S, the forward point of contact and the aft point of contact, respectively (Figure 3.2.3).

D_S = diameter of tail shaft at mid-point of the taper in axial direction, mm (in.), taking into account the exclusion of forward and aft counte rbore length and the forward and aft edge radii. (Figure 3.2.3)

E_b = modulus of elasticity for boss material, N/mm^2 (kgf/mm^2, psi). Material properties are given below.

E_S = modulus of elasticity of shaft material, N/mm^2 (kgf/mm^2, psi). Material properties are given below.

F_v = shear force at propeller/shaft interface = $\frac{2cQ}{D_s}$, N (kgf, lbf)

H = rated power, kW (PS, hp)

$K = \frac{D_b}{D_S}$

L = contact length, mm (in.), Refer (Figure 3.2.3)

P = mean propeller pitch, mm (in.)

Q = rated torque corresponding to the rated power, H, and the propeller speed, R, N-mm (kgf-mm, lbf-in)

$$= \quad 9550 \times 10^3 \frac{H}{R} \quad \text{N-mm}$$

$$= \quad 716{,}200 \frac{H}{R} \quad \text{kgf-mm}$$

$$= \quad 63{,}025 \frac{H}{R} \quad \text{lbf-in}$$

R = propeller speed at rated power, rpm

S = factor of safety against slip at 35°C (95°F). S shall be at least 2.8 under the section of rated torque (based on maximum continuous rating) plus torque due to torsional vibrations.

T = rated propeller thrust, N (kgf, lbf)

V = vessel speed at rated power, knots

α_b = coefficient of linear expansion of shaft material, mm/mm-°C (in/in-°F).

Material properties are given below.

α_S = coefficient of linear expansion of shaft material, mm/mm-°C (in/in-°F).

Material properties are given below.

μ = coefficient of friction between contact surfaces. For oil injection method of fit, μ shall be taken as no greater than 0.13 for bronze/steel propeller bosses on steel shafts. For dry method of fit using cast iron on steel shafts, μ shall be taken as no greater than 0.18.

V_b = Poisson's ratio for boss material. Material properties are given below.

V_S = Poisson's ratio for shaft material. Material properties are given below..

τ = taper of tail shaft on radius (e.g., if taper = 1/15 on diameter, τ = 1/30 on radius). τ is not to exceed 1/30.

σ_E = maximum equivalent uniaxial stress in the boss at 0°F (32°F) based on the von Mises-Hencky criterion, N/mm^2 (kgf/mm^2, psi). For the purposes of these calculations, σ_E shall be taken as 70% of the minimum specified yield strength of the material as defined in Part 2-Chapter3-Sect 1[13.3.] For cast iron, σ_E shall be taken as 30% of the minimum specified tensile strength.

The following material constants may be used:

Material	*Modulus of Elasticity, E*			*Poisson's Ratio, v*	*Coefficient of Expansion, α*	
	N/mm²	*kgf/mm²*	*psi*		*mm/mm°C*	*in./in.°F*
Cast and forged steel	20.6×10^4	2.1×10^4	29.8×10^6	0.29	12.0×10^{-6}	6.67×10^{-6}
Cast iron	9.8×10^4	1.0×10^4	14.2×10^6	0.26	12.0×10^{-6}	6.67×10^{-6}
Bronzes, Types 2 & 3	10.8×10^4	1.1×10^4	15.6×10^6	0.33	17.5×10^{-6}	9.72×10^{-6}
Bronzes, Types 4 & 5	11.8×10^4	1.2×10^4	17.1×10^6	0.33	17.5×10^{-6}	9.72×10^{-6}

FIGURE 3.2.3

Keyless Propeller – Theoretical Contact Surface Area Between Propeller Boss and Shaft

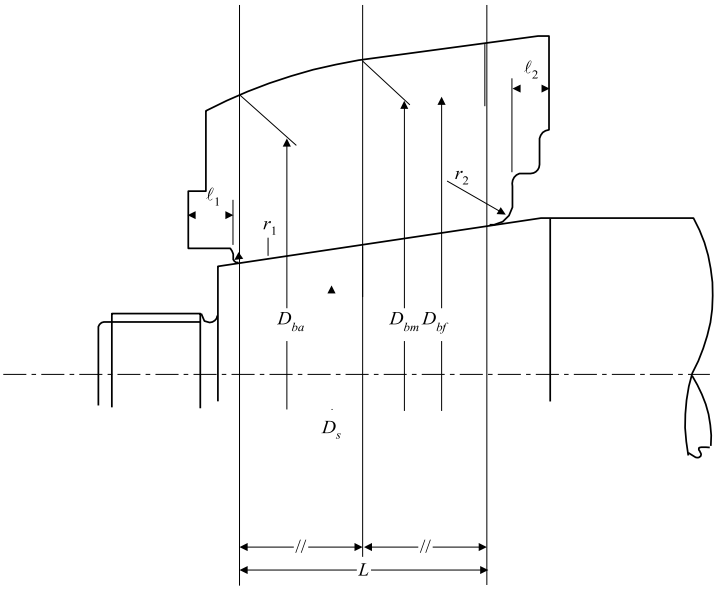

2.11 Protection Against Corrosion

2.11.1 Propeller Aft End

The exposed steel of the shaft shall be protected from the action of the water by filling all spaces between cap, hub and shaft with a suitable material. The propeller shall be fitted with a fairwater cap, acorn nut, or other suitable after end sealing arrangement which prevents sea water from having contact with the shaft taper area. Refer Figure 3.2.4 below for a typical sealing arrangement.

2.11.2 Propeller Forward End

The propeller assembly shall be sealed at the forward end with a well-fitted, soft-rubber packing ring. When the rubber ring is fitted in an external gland, the hub counter bore shall be filled with suitable material, and clearances between shaft liner and hub counter bore shall be kept to a minimum. When the rubber ring is fitted internally, ample clearance shall be provided between liner and hub and the ring is to be sufficiently oversize to squeeze into the clearance space when the propeller is driven up on the shaft; and, where necessary, a filler piece shall be fitted in the propeller hub keyway to provide a flat, unbroken seating for the ring.

The recess formed at the small end of the taper by the overhanging propeller hub shall be packed with a rust preventive compound before the propeller nut is put on.

2.11.3 Noncorrosive, Non-pitting Alloys

The sealing arrangements above are not required where the tail shaft is fabricated of corrosion-resistant, pitting-resistant alloy unless required by the manufacturer.

FIGURE 3.2.4

Propeller Hub Details

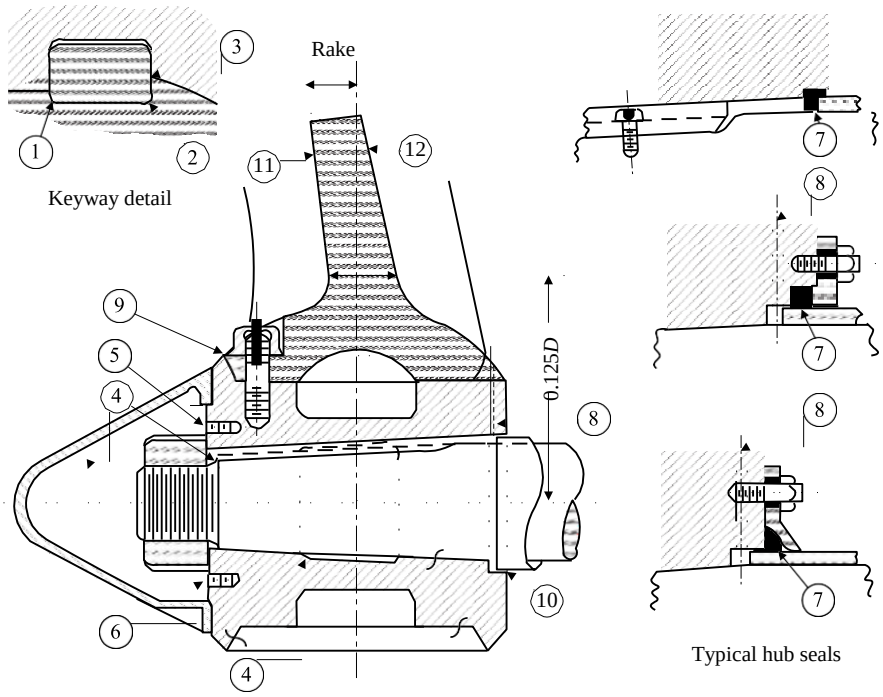

Section of typical built-up propeller

1	Liberal Fillet	7	Soft rubber ring
2	Chamfer corners of key	8	Fill and vent holes. One to be centered on keyway
3	Break sharp corners of keyway in shaft		
4	Fill with suitable sealing material	9	Refer Ch 3 Sect[2. 5.4]
		10	Refer typical hub seals
5	Locking device	11	Face (tension side)
6	Threaded holes for jack bolts	12	Back (compression side)

SECTION 3 STEERING GEAR

Contents

3.1 General

3.1.1 Application

These requirements apply to vessels which have rule-required upper rudder stock diameter less than 230 mm (9 in.). Where the rule-required upper rudder stock diameter is 230 mm (9 in.) or above, the 5A-*INTLREG Rules for Building and Classing Steel Vessels* shall be applied.

Where a rudder shall not fitted and steering is achieved by change of setting of the propulsion units, such as the use of cycloidal, azimuthing or similar type propulsion systems, Part 5A-Chapter11-Sect 5 iof the *INTLREG Rules for Building and Classing Steel Vessels* shall be applied.

3.1.2 Definitions

3.1.2.1 Main Steering Gear

Main steering gear consists of , rudder actuators, power units, ancillary equipment and the means of applying torque to the rudder stock (e.g., tiller or quadrant) necessary for effecting movement of the rudder for the purpose of steering the vessel.

3.1.2.2 Auxiliary Steering Gear

Auxiliary steering gear is the equipment other than any part of the main steering gear necessary to steer the vessel in the event of failure of the main steering gear, but not including the tiller, quadrant or components serving the same purpose.

3.1.2.3 Steering Gear Control System

Steering gear control system is the equipment by which orders are transmitted from the navigation bridge to the steering gear power actuating system. Steering gear control systems comprise transmitters, receivers, hydraulic control pumps and their associated motors, motor controllers, piping and cables required to control the steering gear power actuating system. For the purpose of the Rules, steering wheels, steering levers, and rudder angle feedback linkages are not considered to be part of the control system.

3.1.2.4 Power Units

A steering gear power unit is:

i) In the case of electric steering gears, an electric motor and its associated electrical equipment,

ii) In the case of electro-hydraulic steering gears, an electric motor and its associated electrical equipment and connected pump(s), and

iii) In the case of other hydraulic steering gears, a driving engine and connected pump(s).

3.1.2.5 Power Actuating System

Power actuating system is the hydraulic equipment provided for supplying power to turn the rudder stock, comprising a power unit or units together with the associated pipes and fittings and a rudder actuator. The power actuating systems may share common mechanical components (i.e., tiller, quadrant, rudder stock, or components serving the same purpose) Rudder Actuator

Rudder actuator is the component which directly converts hydraulic pressure into mechanical action to move the rudder. This may be a hydraulic cylinder or a hydraulic motor.

3.1.2.6 Maximum Working Pressure

Maximum working pressure is the expected pressure in the system when the steering gear is operated to comply with Chapter 3 Sect 3[3.1.5]

3.1.3 Plans and Data

Plans and data of the steering gear system to be submitted are as follows:

3.1.3.1 Plans

General arrangements of the main and auxiliary steering gears, and steering gear compartment. Assembly of upper rudder stock, tiller, tie rod, rudder actuators, etc., as applicable.

Construction details of all torque-transmitting components of steering gear, such as tiller, tiller pin, tiller/rudder stock interference fit mechanism, tie rod, rudder actuator, etc., including bill of materials, welding procedures, nondestructive testing, as applicable.

Schematic hydraulic piping diagram, incorporating hydraulic logic diagram, and including bill of materials, typical pipe to pipe joint details, pipe to valve joint details, pipe to equipment joint details, pressure rating of valves and pipe fittings and pressure relief valve settings.

Steering gear control system incorporating schematic electrical control logic diagram, instrumentation, alarm devices, etc., and including bill of materials.

Electrical power supply to power units and to steering gear control, including schematic diagram of motor controllers, feeder cables, feeder cable electrical protection.

3.1.3.2 Data

Rated torque of main steering gear.

Calculations of torque-transmitting components such as tiller, tie rod, rudder actuator, etc.

3.1.4 Power Operation

The main steering gear shall be power-operated by one or more power units if the rule-required upper rudder stock diameter is 120 mm (4.7 in.) or greater.

Notwithstanding the above, the performance requirements stated in Sect 3 [3.1.5] and [3.1.6] shall be used to determine if it is necessary for the main and auxiliary steering gears to be power-operated.

3.1.5 Main Steering Gear

3.1.5.1 General

The main steering gear shall be capable of putting the rudder from 35° on one side to 35° on the other side with the vessel running ahead at maximum continuous shaft rpm and at the summer load waterline; and under the same conditions, the travel time from 35° on either side to 30° on the other side shall not to be more than 28 seconds. For controllable pitch propellers, the propeller pitch shall be at the maximum design pitch approved for the above maximum continuous ahead rated rpm.

3.1.5.2 Tugs of an Articulated Connection

For tugs of an articulated connection, where the steering system is optimized for the integrated tug-barge (ITB) system and the required "hard over" rudder angle of 35 degrees to 35 degrees for the tug operating alone results in excessive angles of heel when tested at maximum continuous RPM, a lesser angle may be accepted with the following condition:

i) The required hard over rudder angle of 35 degrees to 35 degrees shall be demonstrated with the tug and barge coupled.

ii) For the tug operating alone, the hard over rudder angle shall be tested at the maximum angle and conditions defined by the designer. The owner shall be aware of this operating mode and the rudder angle operating restrictions.

iii) The test conditions defined in condition Sect 3 [3.1.5.2] above shall be considered as the limit for operation while the tug is alone and means shall be provided to avoid exceeding this limit; the following should be considered:

a) A warning plate indicating the maximum rudder angle and conditions for operating the tug alone shall be fitted at the navigating position.

b) An audible and visual alarm shall be fitted at the navigation bridge if the maximum rudder angle is exceeded.

The above arrangement shall be considered subject to the flag Administration approval.

3.1.6 Auxiliary Steering Gear

The auxiliary steering gear shall be capable of putting the rudder from 15° on one side to 15° on the other side in not more than 60 seconds with the vessel running ahead at half speed, or seven knots, whichever is greater.

The auxiliary steering gear shall be so arranged that the failure of the main steering gear will not render it inoperative. Likewise, failure of the auxiliary steering gear shall not to affect the main steering gear.

An auxiliary steering gear shall not required under the following conditions.

3.1.6.1 When the main steering gear comprises two or more power units, and is so arranged that after a single failure in its piping system or in one of the power units, the defect can be isolated so that the steering capability can be maintained or regained; and provided that

3.1.6.1(a) For passenger vessel, the main steering gear is capable of operating the rudder, as required in Chapter 3,Sect 3 [3.1.5] while any one of the power units is out of operation; and

3.1.6.1(b) For cargo vessel, the main steering gear shall be capable of operating the rudder, as required by Ch 3,Sect [3.1.5] while all the power units are in operation.

3.1.6.2 When the main steering gear is non-power-operated such as an orbitrol system, or consists solely of mechanical components such as sheaves, blocks, wires, chains, etc.

3.1.7 Steering Gear Compartment Unit Location

The main and the auxiliary steering gears shall be protected from weather. The power units may be located either within or outside of the compartment containing the rudder actuators. In the event of loss of hydraulic fluid and of the need to restore the operation of the main or the auxiliary steering gear, the steering gear compartment shall be provided with handrails and gratings or other non-slip surfaces to ensure suitable working conditions.

In the event of control system failure, or the need to operate the main or the auxiliary steering gear from within the steering compartment or from positions other than the navigation bridge, vessels of 500 gross tons and above shall be provided with a means to indicate the position of the rudder at these positions where emergency steering shall be conducted.

3.2 Materials

3.2.1 General

All steering gear components transmitting a force to the rudder and pressure retaining components of the hydraulic rudder actuator shall be of steel or other approved ductile material. The use of gray cast iron or other material having an elongation less than 12% in 50 mm (2 in.) shall not acceptable

3.2.2 Material Testing

Except as modified below, materials for the parts and components mentioned in Sect 3 [3.2.1] above ,shall be tested in the presence of the Surveyor in accordance with the requirements of Part 2,Chapter 2 of the INTLREG *Rules for Building and Classing Steel Vessels*.

Material tests for steering gear coupling bolts and torque transmitting keys need not be witnessed by the Surveyor. but it is required to show manufacturer's test certificates which could be traced to these components, as per his request

Material tests for commercially supplied tie-rod nuts need not be witnessed by the Surveyor, provided the nuts are in compliance with the approved steering gear drawings and are appropriately marked and identified in accordance with a recognized industry standard. Mill test reports for the tie-rod nuts to provide for the Surveyor upon request. For all non-standard tie-rod nuts, material testing is required to be performed in the presence of the Surveyor.

Material tests for forged, welded or seamless steel parts (including the internal components) and all non- ferrous parts of rudder actuators that are under 150 mm (6 in.) in internal diameter need not be carried out in the presence of the Surveyor. Such parts are to comply with the requirements of Chapter 2 of the above referenced Part 2, or such other appropriate material specifications as may be approved in connection with a particular design, and will be accepted on the basis of presentation of mill certificates to the Surveyor for verification.

3.3 Design

3.3.1 Power Gear Stops

The steering gear is required to be fitted with arrangements, such as limit switches, for stopping the steering gear before the structural rudder stops Refer Part 5A-Chapter12-Sect 1[1.1.6] or positive mechanical stops within the steering gear are reached. These arrangements shall be synchronized with the rudder stock or position of the steering gear itself and may be an integral part of the rudder actuator. Arrangements to satisfy this requirement through the steering gear control system are not permitted

3.3.2 Mechanical Components

All steering gear parts transmitting force to or from the rudder, such as tillers, quadrants, rams, pins, tie rods and keys, shall be proportioned to have strength equivalent to that of the rule-required upper rudder stock diameter

3.3.3 Steering Gear Torque

3.3.3.1 Minimum Required Rated Torque

The rated torque of the steering gear shall not to be less than the expected torque, as defined in Part 5A- Chapter-12, Sect-1[1.1.5].

3.3.3.2 Maximum Allowable Torque

The transmitted torque, T_{max}, of the steering gear shall not to be greater than the maximum allowable torque, T_{ar}, based on the actual rudder stock diameter.

3.3.3.2(a) *Transmitted torque.* The transmitted torque, T_{max}, shall be based on the relief valve setting and to be determined in accordance with the following equations:

For ram type actuator:

$T_{max} = P \cdot N \cdot A \cdot L_2 / (C \cdot \cos^2 \theta)$ kN-m (tf-m, Ltf-ft)

For rotary vane type actuator:)

$T_{max} = P \cdot N \cdot A \cdot L_2 / C$ kN-m (tf-m, Ltf-ft)

For linked cylinder type actuator:

$T_{max} = P \cdot N \cdot A \cdot L_2 \cos \theta / C$ kN-m (tf-m, Ltf-ft)

where

P = *steering gear relief valve setting pressure, bar (kgf/cm2, psi)*

N = *number of active pistons or vanes*

A = *area of piston or vane, mm2 (cm2, in2)*

L2 = *torque arm, equal the distance from the point of application of the force on the arm to the center of the rudder stock at 0 deg of the rudder angle, m (ft)*

C = *factor, 10000 (1000, 2240)*

θ = *maximum permissible rudder angle (normally 35 degrees)*

3.3.3.2(b) Maximum allowable torque for rudder stock. The maximum allowable torque "Tar" for the actual rudder stock diameter shall be determined in accordance with the following equation:

Tar = *2.0(Dr/Nu)3/Ks kN-m (tf-m, Ltf-ft)*

Ks = *material factor for rudder stock*

Dr = *actual rudder stock diameter at minimum point below the tiller or the rotor, mm (in.)*

Nu = *factor, 42.0 (89.9, 2.39)*

3.3.4 Tiller

Tillers are to comply with the following requirements. All terms in the formulae are to have consistent units.

3.3.4.1

Depth of the tiller hub shall not to be less than the rule-required upper rudder stock diameter.

3.3.4.2

Thickness of the tiller hub shall not to be less than one third of the rule-required upper rudder stock diameter.

3.3.4.3

Notwithstanding [3.3.4.2] above, the polar section modulus of the tiller hub shall not to be less than:

$$0.196 \times S^3 \times \frac{K_h}{K_s}$$

where

S = rule-required upper rudder stock diameter.

K_S = material factor of the rudder stock

K_h = material factor of the hub

3.3.4.4

The shear area of the tiller key shall not to be less than

$$\frac{0.196\ S^3}{r} \times \frac{K_t}{K_s}$$

where

r = mean radius of the rudder stock in way of the key

K_k = material factor of the key

3.3.4.5

Bearing stress of the tiller and rudder stock keyways are not to be more than 0.9 times the material yield stress.

3.3.4.6 Keyless Coupling

Hydraulic or shrink fitted keyless coupling should be based on preload stress calculations and fitting procedures. The calculated torsional holding capacity shall be at least 2.0 times the transmitted torque based on the steering gear relief valve setting. The coefficient of friction for the oil injection method of fit is to be taken as no greater than 0.13 and that for dry method is to be taken as no greater than 0.18. Preload stress shall not exceed 70% of the minimum yield strength

3.3.4.7

Section modulus of the tiller arm at any point within its length shall not to be less than:

$$\frac{0.167\ S^3(L_2-L_1)}{L_2} \times \frac{K_t}{K_s}$$

Where

L_2 = *distance from the point of application of the force on the tiller to the centre of Rudder stock*

L_1 = distance between the section of the tiller arm under consideration and the center of the rudder stock

K_t = material factor of the tiller or quadrant arm

Other symbols are defined above.

3.3.4.8 Split or semi-circular tiller or quadrant hubs assembled by bolting are to have bolts on each side having a total cross-sectional area not less than that given below (use a consistent system of units):

$$\frac{0.196\ S^3}{L_3} \times \frac{K_b}{K_s}$$

L_3 = distance between the center of the bolts and the center of the rudder stock

K_b = material factor of bolt

Other symbols are as defined above.

The thickness of the bolting flange shall not to be less than the minimum required diameter of the bolt.

3.3.4.9

Where the tiller is of welded construction, weld design and weld sizes shall be proportioned such that they are commensurate with the strength of the tiller.

3.3.5 Pin

Shear area of the tiller pin shall not to be less than

$$\frac{0.196\ S^3}{L_2} \times \frac{K_p}{K_s}$$

Where

K_p = material factor of the pin

Other symbols are defined above.

3.3.6 Tie Rod (Jockey Bar)

The buckling strength of the tie rod shall not to be less than:

$$\frac{0.113\ S^3\ U_R}{L_2}$$

Where

U_R = ultimate tensile strength of the rudder stock

Other symbols are defined above.

3.3.7 Rudder Actuators

3.3.7.1 Design

Rudder actuators should be designed accordingly to the requirements of pressure vessels in Part 5A,Chapter 10, Sec-1, except that the maximum allowable stress S is not allowed to exceed the lower of the following;

$$\frac{U}{A} \quad \text{or} \quad \frac{Y}{B}$$

where

U = minimum specified tensile strength of material at room temperature

Y = minimum specified yield point or yield strength

Values of the factor A and *B are given below*

Factor	Rolled or Forged Steel	Cast Steel	Nodular Cast Iron
A	3.5	4	5
B	1.7	2	3

3.3.7.2 Oil Seals

Oil seals between non-moving parts forming the external boundary shall be of the pressure seal type. Oil seals between moving parts forming the external pressure boundary shall be fitted in duplicate so that the failure of one seal does not render the actuator inoperative. Alternative seal arrangement may be acceptable, provided equivalent protection against leakage can be ensured.

3.3.8 Mechanical Steering Gear

Where mechanical steering systems are permitted, the following are applicable.

3.3.8.1 Steering Chains and Wire Ropes

Steering chains and wire rope shall be tested as required by Sections Part 2/chapter 2 of the INTLREG *Rules for Materials and Welding (Part 2)*, respectively.

3.3.8.2 Sheaves

Sheaves shall be of ample size and so placed as to provide a fair lead to the quadrant and avoid acute angles. Parts subjected to shock are not to be of cast iron. Guards shall be placed around the sheaves to protect against injury. For sheaves intended for use with ropes, the radius of the grooves shall be equal to that of the rope plus 0.8 mm ($^{1}/_{32}$ in.), and the sheave diameter shall be determined on the basis of wire rope flexibility. For 6 x 37 wire rope, the sheave diameter shall be not less than 18 times that of the rope. For wire ropes of lesser flexibility, the sheave diameter shall be increased accordingly. Sheave diameters for chain shall be not less than 30 times the chain diameter.

3.3.8.3 Buffers

Steering gears other than the hydraulic type shall be designed with suitable buffer arrangement to relieve the gear from shocks to the rudder.

3.4 Hydraulic System

3.4.1 Pipes, Valves and Fittings

Pipes, valves and fittings are to meet the requirements of Chapter 4,Sect [6.1], as applicable. The design pressure of piping components subject to internal hydraulic pressure shall be at least 1.25 times the maximum working pressure of the system. Arrangements for bleeding air from the hydraulic system shall be provided, where necessary.

3.4.2 Relief Valves

Relief valves shall be provided for the protection of the hydraulic system at any part which can be isolated and in which pressure can be generated from the power source or from external forces. Each relief valve shall be capable of relieving not less than 110% of the full flow of the pump(s) which can discharge through it. With this flow condition, the maximum pressure rise shall not to exceed 10% of the relief valve setting, taking into consideration increase in oil viscosity for extreme ambient conditions.

The relief valve setting shall be at least 1.25 times the maximum working pressure (Refer Chapter 3 Sect 3 [3.1.2.5]), but shall not to exceed the maximum design pressure .Refer Chapter 3, Sect 3 [3.4.1]

3.4.3 Filtration

A means shall be provided to maintain cleanliness of the hydraulic fluid.

3.4.4 Single Failure

Where multiple power units are provided and an auxiliary steering gear shall not fitted, the steering gear hydraulic system shall be designed so that after a single failure in its piping system, one of the power units, or mechanical connection to the power units, the defect can be isolated so that the integrity of the remaining part of the system will not be impaired and the steering capability can be maintained or regained. For this purpose, the piping system associated with each power unit shall be independent of that of the other units as far as practicable and connections shall be made only where necessary. Isolation valves shall be fitted, as necessary, to allow any single failure in the piping system to be isolated and the steering gear to be operated with the remaining intact part of the system. Isolation valves shall be fitted at the pipe connections to rudder actuators. Where a non-duplicated rudder actuator is employed, the isolation valves shall be mounted directly on the actuator. Piping systems shall be so arranged that transfer between power units can be readily affected.

3.4.5 Storage Tank and Hydraulic Oil Reservoir

A fixed hydraulic oil storage tank independent of the reservoir is required to be provided in addition to the power unit reservoir. The storage tank should have sufficient capacity to recharge at least one power actuating system, including the power unit reservoir. The tank is to be permanently connected by piping in such a manner so that the system can be readily recharged from a position within the steering gear compartment. An approved level indicating system is to be provided for the storage tank.

Also refer Part 5A Chapter 8, Sect-6 [6.2.2] for arrangements of the power unit reservoir and the storage tank.

3.5 Power Units

If the rule required upper rudder stock diameter is 120 mm (4.7 in.) or greater, power units shall be tested and certified in accordance with the following requirements. If the rule-required upper rudder stock diameter is less than 120 mm (4.7 in.), and if the vessel is 500 gross tons or greater, power

units shall be tested and certified in accordance with Part 5A-Chapter6-Sect 9 [9.3] only. For vessels less than 500 gross tons, power units may be accepted based on manufacturer's guarantee for suitability for the intended purpose and subject to satisfactory functional tests after installation.

Power units are to be certified by INTLREG. Refer Chapter 3, Sect 3 [3.5.2]

3.5.1 Prototype Test

A prototype of each new design power unit pump shall be shop-tested for a duration of not less than 100 hours. The testing shall be carried out in accordance with an approved agenda and is to include the following as a minimum.

3.5.1.1

The pump and stroke control (or directional control valve) shall be operated continuously from full flow and relief valve pressure in one direction through idle to full flow and relief valve pressure in the opposite direction.

3.5.1.2

Pump suction conditions are to simulate lowest anticipated suction head. The power unit shall be checked for abnormal heating, excessive vibration or other irregularities. Following the test, the power unit pump shall be disassembled and inspected in the presence of a Surveyor.

3.5.2 Production Unit Test

Each power unit pump is to meet the hydrostatic and capacity tests in accordance with Chapter 4 Sec t2 [2.1], as applicable.

3.6 Steering Gear Control System

3.6.1 Locations of Control

3.6.1.1 Main Steering Gear

The main steering gear shall be provided with control from the navigation bridge and local control from within the steering gear compartment. However, if the power unit is located in a space other than the steering compartment, the local control shall be provided in that space instead of the steering compartment. For the purpose of local control from the steering gear compartment (or the space containing the power unit), a means shall be provided in the steering compartment (or the space containing the power unit) to disconnect any control system from the navigation bridge. Such means for disconnecting shall be operable by a single person without the need for tools.

3.6.1.2 Auxiliary Steering Gear

The auxiliary steering gear shall be operable from a space in which the operation of the auxiliary steering gear can be effectively carried out, or from within the steering compartment. However, if power operated, it shall be provided with control from the navigation bridge also.

3.6.1.3 Duplicate Power Units

Where duplicate (or more) power units are provided and an auxiliary steering gear shall not fitted, two independent systems of control shall be provided. Each of these systems is to meet the requirements of the control system of the main steering gear .Refer Sect 3 [3.6.1.1]. above Where the control system consists of a hydraulic telemotor, a second independent system need not be fitted.

3.6.1.4 Manual Means

If the steering gear is operated by manual means only, such as by means of a steering wheel through a mechanical or a non-power-operated hydraulic system, only the requirements of Sections 3[3. 6.4] and [3.6.5.1] Rudder position indicator of this section

3.6.2 General

3.6.2.1 Main and Auxiliary Steering Gears

Control systems of the main and the auxiliary steering gears shall be independent of each other in all respects. The independent control systems are to meet the following requirements.

(a) Redundancy. These control systems shall be independent in all respects and are to provide on the navigation bridge all necessary apparatus and arrangements for the starting and stopping of steering gear motors and the rapid transfer of steering power and control between units.

The control cables and piping shall be separated throughout their length as widely as is practicable.
Wires, terminals and the components for duplicated steering gear control systems installed in units, control boxes, switchboards or bridge consoles shall be separated throughout their length as widely as is practicable. Where physical separation shall not practicable, separation may be achieved by means of a fire retardant plate.

(b) Duplication. All electric components of the steering gear control system shall be duplicated. This does not require duplication of a steering wheel or steering lever.

(c) Steering Mode Selector Switch. If a joint steering mode selector switch (uniaxial switch) is employed for both steering gear control systems, the connections for the circuits of the control systems shall be divided accordingly and separated from each other by an isolating plate or by air gap.

(d) Follow-up Amplifier. In the case of double follow-up control, the amplifiers shall be designed and fed so as to be electrically and mechanically separated. In the case of non-follow-up control and follow-up control, the follow-up amplifiers shall be protected selectively.

(e) Additional Control Systems. Control circuits for additional control systems (e.g., steering lever or autopilot) shall be designed for all-pole disconnection.

(f) Feed-back Units and Limit Switches. The feed-back units and limit switches, if any, for the steering gear control systems shall be separated electrically and mechanically connected to the rudder stock or actuator separately.

(g) Hydraulic Control Components. Hydraulic system components in the power actuating or hydraulic servo systems controlling the power systems of the steering gear, (e.g., solenoid valves, magnetic valves) shall be considered as part of the steering gear control system and shall be duplicated and separated.

Hydraulic system components in the steering gear control system that are part of a power unit may be regarded as being duplicated and separated when there are two or more separate power units provided and the piping to each power unit can be isolated.

3.6.2.2 Duplicate Power Units

If the main steering gear consists of duplicated (or more) power units and an auxiliary steering shall not fitted, the two independent means of control are to comply with the requirements of Sect 3 [3.6.2.1] of above

3.6.2.3 Single Power Units

If the main steering gear consists of a single power unit and the auxiliary steering gear shall not power operated, only one control system for the main steering gear need be provided.

3.6.2.4 Computer-based Systems

Steering control systems that are computer-based systems are to comply with Section Part-6, Chapter-8, Sect-1[1.3.2] of the *INTLREG Rules for Building and Classing Steel Vessels* and shall be considered Category III.

3.6.3 Control System Power Supply

Electrical power for the steering gear control system shall be derived from the motor controller of the power unit that it is controlling, or from the main switchboard at a point adjacent to the supply to the power unit.

3.6.4 Communication

A means of communication shall be provided between the navigation bridge and all other locations where steering can be effected, such as the steering gear compartment, the space where the power units are located and the space where auxiliary steering gear shall be operated, as applicable.

3.6.5 Instrumentation and Alarms

The following instruments and alarms shall be provided. The audible and visual alarms are to have provisions for testing.

3.6.5.1 Rudder Position Indicator

The angular position of the rudder shall be indicated on the navigational bridge and all other locations where steering can be effected, such as the steering gear compartment, the space where the power units are located and the space where auxiliary steering gear shall be operated, as applicable. The rudder angle indication shall be independent of the steering gear control system.

3.6.5.2 Autopilot

Where autopilot is fitted, a visual and audible alarm shall be provided on the navigation bridge to indicate its failure.

Where a power unit is provided and steering is controlled from Navigation Bridge, the following are applicable:

3.6.5.3 Motor Alarm

A visual and audible alarm shall be given on the navigation bridge and the engine room control station to indicate an overload condition of the steering gear power unit motor. Where three phase electrical power is used, a visual audible alarm shall be installed which indicates failure of any one of the supply phases. The operation of these alarms shall not to interrupt the circuit.

3.6.5.4 Motor Running Indicators

Indicators for running indication of motors shall be installed on the navigation bridge and the engine room control station.

3.6.5.5 Power Failure

A visual and audible alarm shall be given on the navigation bridge and engine room control station to indicate a power failure to any one of the steering gear power units.

3.6.5.6 Control Power Failure

A visual and audible alarm shall be given on the navigation bridge and the engine room control station to indicate an electrical power failure in any steering gear control circuit or remote control circuit.

In addition, hydraulic power operated steering gear shall be provided with the following:

3.6.5.7 Low Oil Level Alarm

A visual and audible alarm shall be given on the navigation bridge and engine room control station to indicate a low oil level in any power unit reservoir.

3.6.5.8 Hydraulic Lock

Where the arrangement is such that a single failure may cause hydraulic lock and loss of steering, an audible and visual hydraulic lock alarm which identifies the failed system or component shall be provided on the navigation bridge. The alarm shall be activated upon steering gear failure if:

- Position of the variable displacement pump control system does not correspond to the given order, or
- Incorrect position of the 3-way full flow valve or similar in the constant delivery pump system is detected.

Alternatively, an independent steering failure alarm for follow-up control systems complying with the following requirements may be provided in lieu of a hydraulic lock alarm.

Where an independent steering failure alarm is installed for follow-up control systems it is to comply with the following:

(a) The steering failure alarm system is to actuate an audible and visible alarm in the wheelhouse when the actual position of the rudder differs by more than 5 degrees from the rudder position ordered by the follow-up control systems for more than:

- 30 seconds for ordered rudder position changes of 70 degrees;
- 6.5 seconds for ordered rudder position changes of 5 degrees; and

The time period calculated by the following formula for ordered rudder positions changes between 5 degrees and 70 degrees:

$t = (R/2.76) + 4.64$

where:

t = maximum time delay in seconds

R = ordered rudder change in degrees

(b) The steering failure alarm system must be separate from, and independent of, each steering gear control system, except for input received from the steering wheel shaft.

(c) Each steering failure alarm system shall be supplied by a circuit that:

i) Is independent of other steering gear system and steering alarm circuits.

ii) Is fed from the emergency power source through the emergency distribution panel in the wheelhouse, if installed; and

iii) Has no overcurrent protection except short circuit protection

3.6.5.9 Autopilot Override

(a) Steering gear systems provided with an autopilot system are to have a device at the primary steering station to completely disconnect the autopilot control to permit change over to manual operation of the steering gear control system. A display shall be provided at the steering station to ensure that the helmsman can readily and clearly recognize which mode of steering control (autopilot or manual) is in operation.

(b) In addition to the changeover device as in (a), for primary steering stations, where fitted with an automatic autopilot override to change over from autopilot control to manual operation, the following shall be provided.

i) The automatic override of the autopilot is to occur when the manual helm order is 5 degrees of rudder angle or greater.

ii) An audible and visual alarm shall be provided at the primary steering station in the event that the automatic autopilot override fails to respond when the manual helm order is 5 degrees of rudder angle or greater. The alarm shall be separate and distinct from other bridge alarms and is to continue to sound until it is acknowledged.

iii) An audible and visual alarm that is immediately activated upon automatic autopilot override actuation shall be provided at the primary steering station. The alarm shall be distinct from other bridge alarms and is to continue to sound until it is acknowledged.

The following instrumentation and alarms shall be provided.

3.6.5.10 Loop Failures

A visual and audible alarm shall be given on the navigation bridge to indicate a loop failure.

Note: Monitoring shall be provided for short circuit, broken connections and earth faults for command and feedback loops. Monitoring for loop failures shall not required, when a steering failure alarm system is provided. Refer Chapter 3, Sect 3 [3.6.5.8] a),b).c)

3.6.5.11 Computer-based System Failure

For steering control systems that are computer-based systems, a visual and audible alarm shall be given on the navigation bridge to indicate a computer-based system failure.

Note: Monitoring shall be provided for data communication errors, computer hardware failures and software failure. Monitoring for computer-based system failures shall not required, when a steering failure alarm system is provided. Refer Part 5A-Chapter 6-Sect 5 [5.1.3](a), (b) and (c)] Chapter 3, Sect 3 [3.6.5.8] a),b).c)

3.6.6 Operating Instructions

Appropriate operating instructions with a block diagram showing the change-over procedures for steering control systems and steering gear power units shall be permanently posted at a conspicuous location on the navigation bridge and in or near the steering gear compartment. Where system failure alarms are provided, appropriate instructions shall be permanently posted on the navigation bridge to shut down the failed system.

3.7 Electrical Power Supply

Electrical power circuits are to meet the requirements of Chapter 6,Sect 2 [2.3.2.5] and Chapter 6 Sect 2 [2.6]

3.8 Testing and Trials

3.8.1 Testing of Piping System

The following tests shall be performed in the presence of the Surveyor.

3.8.1.1 Shop Tests

After fabrication, each component of the steering gear piping system, including the power units, hydraulic cylinders and piping, shall be hydrostatically tested at the plant of manufacture to 1.5 times the relief valve setting.

3.8.1.2 Installation Tests

After installation in the vessel, the complete piping system, including power units, hydraulic cylinders and piping, shall be subjected to a hydrostatic test equal to 1.1 times the relief valve setting, including a check of the relief valve operation.

3.8.2 Trials

The steering gear shall be tried out on the trial trip in order to demonstrate to the Surveyor's satisfaction that the requirements of the Rules have been met. The trial is to include the operation of the following:

3.8.2.1

The main steering gear, including demonstration of the performance requirements of Ch 3,Sect [3.1.5]or with the rudder fully submerged. Where full rudder submergence cannot be obtained in ballast conditions, steering gear trials shall be conducted at a displacement as close as reasonably possible to full-load displacement as required by Section 6.1.2 of ISO 19019:2005 on the conditions that either the rudder is fully submerged (zero speed waterline) and the vessel is in an acceptable trim condition, or the rudder load and torque at the specified trial loading condition have been predicted and extrapolated to the full load condition.

In any case for the main steering gear trial, the speed of the vessel corresponding to the number of maximum continuous revolution of main engine and maximum design pitch applies.

3.8.2.2

The auxiliary steering gear, if required, including demonstration to the performance requirements of Chapter 3,Sect 3 [3.1.6] and transfer between main and auxiliary steering gear.

3.8.2.3

The power units, including transfer between power units.

3.8.2.4

The emergency power supply required by Chapter 6,Sect 2 [2.3.2.5]

3.8.2.5

The steering gear controls, including transfer of control and local control.

3.8.2.6

The means of communications, as required by Chapter 3, Sect 3 [3.6.4]

3.8.2.7

The alarms and indicators required by Chapter 3,Sect 3 [3.6.5] (test may be done at dockside).

3.8.2.8

The storage and recharging system contained in Chapter 3,Sect 3 [3.4.5] (test may be done at dockside).

3.8.2.9

The isolating of one power actuating system and checking for regaining steering capability are required by Chapter3,Sect 3 [3.4.4] if applicable (test may be done at dockside).

3.8.2.10

Where the steering gear is designed to avoid hydraulic locking, this feature shall be demonstrated.

SECTION 4 WATERJETS

Contents

4.1 Waterjets

4.1.1 General

Full details shall be submitted for the force transmitting parts of waterjet units, including material specifications. For vessels over 24 m (79 ft), the units shall be manufactured under Surveys. Mill certificates shall be provided for the components of the steering section. The material tests for the impellers, shafts and couplings shall be witnessed by the Surveyor. Hydraulic cylinders shall be manufactured and inspected in accordance with the requirements of Chapter 4, Sect 6 [6.2] The use of galvanically dissimilar metallic materials shall be considered in the waterjet design.

4.1.2 Design

Design basis stress calculations for the impellers, shafting, steering mechanism and reversing mechanism shall be submitted to substantiate the suitability and strength of component parts for the intended service. For the purpose of design review, the stress calculations are to cover the “worst case” condition for each component. The factor of safety for the above components shall not to be less than 2.0 when determined by the following equation

$$(1 \div FS) = (S_s \div U) + (S_a \div E)$$

nor less than 4.0 when determined by the following equation:

$$FS = \frac{U}{S_s}$$

where

FS	=	factor of safety
S_S	=	steady stress of low cycle alternating stress
S_a	=	alternating stress
U	=	ultimate tensile strength of material
E	=	corrected fatigue strength of material (based on 10^8 cycles)

4.1.3 Housings

Calculations or test results to substantiate the suitability and strength of the pressure and suction housing shall be submitted for review. The condition with the inlet of the suction blocked is also to be considered. A factor of safety of not less than four based on the ultimate tensile strength of the material (or two based on the yield strength) shall be maintained at each point in the housing. Housing shall be hydrostatically tested to 1.5 times the maximum working pressure or to 3.4 bar (3.5 kgf/cm^2, 50 psi), whichever is greater.

4.1.4 Reversing Mechanisms

Astern thrust shall be provided in sufficient amounts to secure proper control of the vessel in all normal circumstances. The reversing mechanism is to provide for reversing at full power.

4.1.5 Impeller Bearings

Antifriction bearings are to have a B10 life of at least 80,000 hours.

SECTION 5 PROPULSION REDUNDANCY

Contents

5.1 General

5.1.1 Application

The requirements in this Section apply to vessels equipped with propulsion and steering systems designed to provide enhanced reliability and availability through functional redundancy. Application of the requirements of this Section is optional. When a vessel is designed, built and surveyed in accordance with this Section, and when found satisfactory, a classification notation, as specified in,Chapter 3,Sect 5 [5.2] as appropriate, may be granted.

5.1.1.1 It is a prerequisite that the vessels are also to be classed to CCS or UM notation, as per Part 6, Chapter 8, Sect-1[1.2]

5.1.2 Objective

The objective of this Section is to provide requirements which reduce the risk to personnel, the vessel, other vessels or structures, the environment and the economic consequences due to a single failure causing loss of propulsion or steering capability. This is achieved through varying degrees of redundancy based upon the vessel's Classification Notations, as described in Chapter 3, Sect 5[5.2]

The requirements in this Section are intended so that, following a single failure, the vessel is capable of either:

i) Maintaining course and maneuverability at reduced speeds without intervention by other vessels, or

ii) Maintaining position under adverse weather conditions, as described in Chapter 3, Sect 5 [5.4.1] to avoid uncontrolled drift and navigating back to safe harbor when weather conditions are suitable.

In addition, this Section addresses aspects which would reduce the detrimental effects to the propulsion systems due to a localized fire in the machinery spaces.

5.1.3 Definitions

For the purpose of this Section, the following definitions are applicable:

5.1.3.1 Auxiliary Services System

All support systems (e.g., fuel oil system, lubricating oil system, cooling water system, compressed air and hydraulic systems, etc.) which are required to run propulsion machinery and propulsors.

5.1.3.2 Propulsion Machinery Space

Any space containing machinery or equipment forming part of the propulsion systems.

5.1.3.3 Propulsion Machine

A device (e.g., diesel engine, turbine, electrical motor, etc.) which develops mechanical energy to drive a propulsor.

5.1.3.4 Propulsion System

A system designed to provide thrust to a vessel, consisting of one or more propulsion machines, one or more propulsors, all necessary auxiliaries and associated control, alarm and safety systems.

5.1.3.5 Propulsor

A device (e.g., propeller, waterjet) which imparts force to a column of water in order to propel a vessel, together with any equipment necessary to transmit the power from the propulsion machinery to the device (e.g., shafting, gearing, etc.).

5.1.3.6 Steering System

A system designed to control the direction of movement of a vessel, including the rudder, steering gear, etc.

5.1.4 Plans and Data to be Submitted

In addition to the plans and data required by the Rules, the following shall be submitted:

i) Results of computations showing that, upon any single failure in the propulsion and steering systems, the vessel is able to meet the capability requirements of Chapter 3, Sect 5 [5.4.1] if applicable, with details of the computational methods used. Alternatively, the results of model testing are acceptable as evidence.

ii) A Failure Mode and Effect Analysis (FMEA) or equivalent. The integrity of the propulsion systems, steering systems and auxiliary service systems shall be verified by means of a Failure Mode and Effect Analysis (FMEA) or equivalent method and is to show that a single failure will not compromise the criteria as specified in section 4 of this chapter

iii) A Testing Plan to cover the means whereby verification of the redundancy arrangements will be accomplished.

iv) A general arrangement detailing locations of all machinery and equipment necessary for the correct functioning of the propulsion and steering systems, including the routing of all associated power, control and communication cables.(Required IR_1-S and IR_2-S only)

v) Operating Manual, as required in Chapter 3, Sect 5 [5.7]

5.2 Classification Notations

Where requested by the Owner, propulsion and steering installations which are found to comply with the requirements specified in this Section and which have been constructed and installed under survey by the Surveyor may be assigned with the following class notations, as appropriate.

i) **IR_1** A vessel fitted with multiple propulsion machines but only a single propulsor and steering system will be assigned the class notation **IR_1**

ii) **IR_2** A vessel fitted with multiple propulsion machines and also multiple propulsors and steering systems (hence, multiple propulsion systems) will be assigned the class notation **IR_2**

iii) **IR_1-S** A vessel fitted with only a single propulsor but having the propulsion machines arranged in separate spaces such that a fire or flood in one space would not affect the propulsion machine(s) in the other space(s) will be assigned the class notation **IR_1-S**

iv) **IR_2S** A vessel fitted with multiple propulsors (hence, multiple propulsion systems) which has the propulsion machines and propulsors, and associated steering systems arranged in separate spaces (propulsion machinery space and steering gear flat) such that a fire or flood in one space would not affect the propulsion machine(s) and propulsor(s), and associated steering systems in the other space(s) will be assigned the class notation **IR_2-S** Example arrangements for each of the above notations are shown in

Figure .3.5.1

v) **+** (Plus Symbol) The mark **+** will be affixed to the end of any of the above class notations (e.g., **IR_1+, IR_2-S+**) to denote that the vessel's propulsion capability is such that, upon a single failure, propulsive power can be maintained or immediately restored to the extent necessary to withstand adverse weather conditions without drifting, in accordance with Chapter 3,Sect 5 [5.4.2] The lack of the mark **+** after the class notation indicates that the vessel shall not intended to withstand the adverse weather conditions in Chapter 3, Sect 5[5.4.2]. but can maintain course and maneuverability at a reduced speed under normal expected weather conditions, in accordance with Chapter 3,Sect 5[5.4.1] Figure 3.5.1

Figure 3.5.1
Arrangements of Propulsion Redundancy

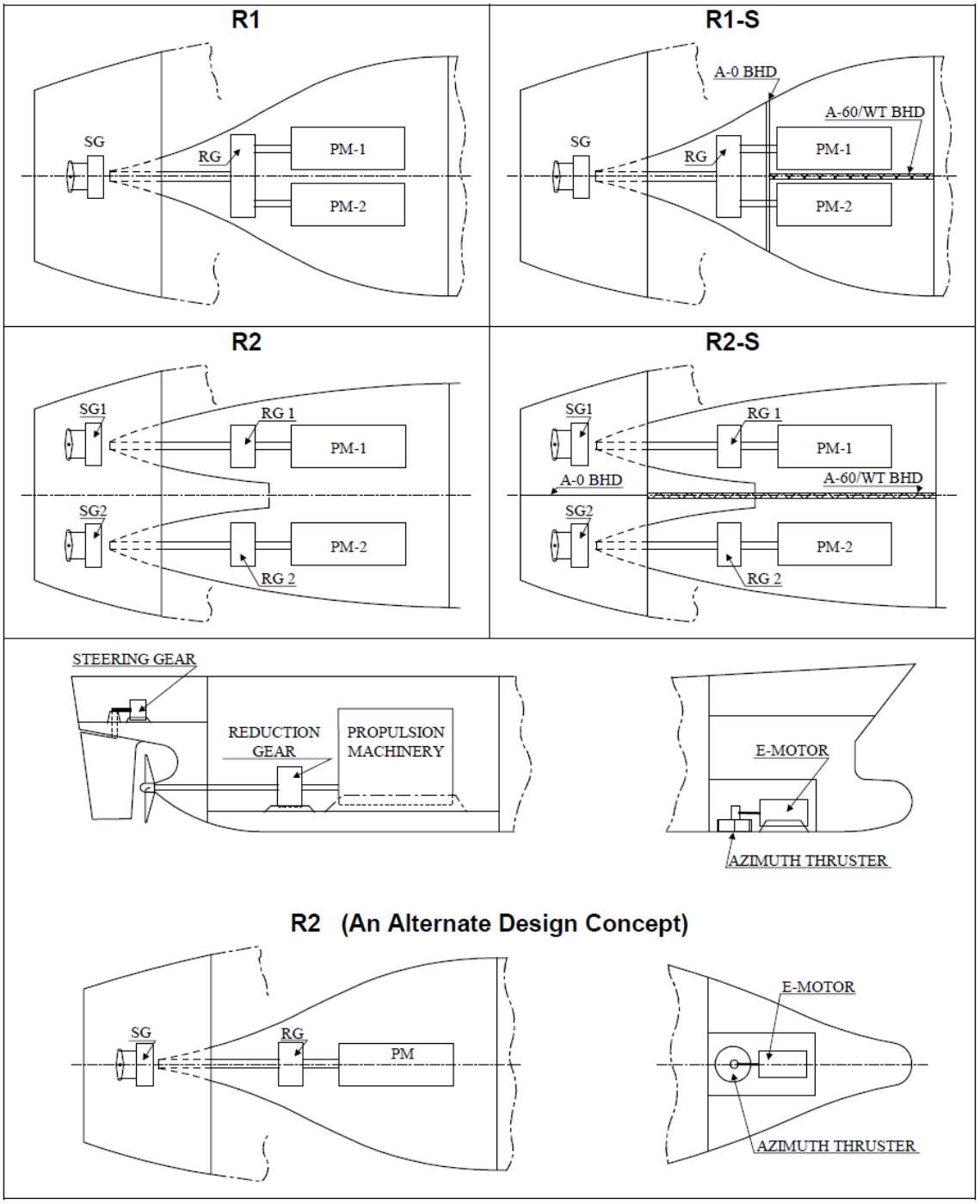

5.3 Single Failure Concept

The degree of redundancy required to meet the objectives of this Section is based upon a single failure concept. The concept accepts that failures may occur but that only one such failure is likely at any time. The final consequence of any single failure shall not to compromise the propulsion and steering capability required in Sect [5.4] below, unless otherwise specified.

5.3.1 Single Failure Criteria

5.3.1.1 **IR_1** Notation

For **IR_1** , the single failure criterion is applied to the propulsion machines, its auxiliary service systems and its control systems. The notation does not consider failure of the propulsor or rudder, or total loss of the propulsion machinery space or steering gear flat due to fire or flood.

5.3.1.2 **IR_2** Notation

For **IR_2,** single failure criterion is applied to the propulsion machines, propulsors, auxiliary service systems, control systems and steering systems. The notation does not consider total loss of the propulsion machinery space or steering gear flat due to fire or flood.

5.3.1.3 **IR_1-S** Notation

For **IR_1-S**, the single failure criterion is applied as for **IR_1 ,** but a fire or flood in one of the propulsion machinery spaces is also considered.

5.3.1.4 **IR_2-S** Notation

For **IR_2-S**, the single failure criterion is applied as for **IR_2** , but a fire or flood in one of the propulsion machinery spaces or steering gear flats is also considered.

5.4 Propulsion and Steering Capability

5.4.1 Vessels Without + in Class Notation

It is required that upon a single failure, the propulsion system shall be continuously maintained or restored within two (2) minutes (for alternate standby propulsion as per Sect [5.4.2] below, such that the vessel is capable of advancing at a speed of at least one-half its design speed or seven knots, whichever is less, for at least 36 hours when the vessel is fully loaded. Adequate steering capability is also to be maintained at this speed.

5.4.2 Vessels with + in Class Notation

In addition to Sect 5 [5.4.1] above, upon a single failure, the propulsion and steering system shall be continuously maintained or immediately restored within two (2) minutes, as is done when an alternate standby type of propulsion is provided, (e.g., electric motor, diesel engine, waterjet propulsion, etc.) such that the vessel is capable of maneuvering into an orientation of least resistance to the weather, and once in that orientation, maintaining position such that the vessel will not drift for at least 36 hours. This may be achieved by using all available propulsion and steering systems including thrusters, if provided. This shall be possible in all weather conditions up to a wind speed of 17 m/s (33 knots) and significant wave height of 4.5 m (15 ft) with 7.3 seconds mean period, both of which are acting concurrently in the same direction. The severest loading condition for vessel's maneuverability is also to be considered for compliance with this weather criterion. Compliance with these capability requirements shall be verified by computational simulations, and the detailed results shall be submitted for

approval. The estimated optimum capability shall be documented in the operating manual, as required in Chapter 3,Sect 5 [5.7]

5.5 System Design

5.5.1 Propulsion Machinery and Propulsors

At least two independent propulsion machines shall be provided. As appropriate, a single failure in any one propulsion machine or auxiliary service system shall not to result in propulsion performance inferior to that required by Chapter 3, Sect 5 [5.4.1] or Chapter 3 Sect 5 [5.4.2] as applicable.

5.5.1.1 IR_1 Notation

For **R1** notation, the propulsion machines and auxiliary service systems may be located in the same propulsion machinery space and the propulsion machines may drive a single propulsor.

5.5.1.2 IR_2 Notation

For IR_2 notation, at least two propulsors shall be provided such that a single failure of one will not result in propulsion performance inferior to that required by Ch 3, Sect [5.4.1] or Chapter 3 Sect 5 [5.4.2] as applicable. The propulsion machines and auxiliary service systems may, however, be located in the same propulsion machinery space.

5.5.1.3 IR_1-S Notation

IR_1-S notation, the propulsion machines and auxiliary service systems shall be separated in such a way that total loss of any one propulsion machinery space (due to fire or flood) will not result in propulsion performance inferior to that required by Chapter 3, Sect 5 [5.4.1] or Chapter 3 Sect 5 [5.4.2], as applicable. The propulsion machines may, however, drive a single propulsor, and the main propulsion gear or main power transmitting gear shall be located outside the propulsion machinery spaces separated by a bulkhead meeting the criteria as per Sect [5.5.2]. below

5.5.1.4 **R2-S** Notation5

IR_2-S notation, at least two propulsors shall be provided, and the propulsion systems shall be installed in separate spaces such that a single failure in one propulsor or a total loss of any one propulsion machinery space (due to fire or flood) will not result in propulsion performance inferior to that required by Chapter 3, Sect [5.4.1] or Chapter 3 Sect 5 [5.4.2], as applicable.

5.5.2 System Segregation

Where failure is deemed to include loss of a complete propulsion machinery space due to fire or flooding (IR_1-S and IR_2-S notations), redundant components and systems shall be separated by watertight bulkheads with an A-60 fire classification.

Service access doors which comply Part 4/Chapter 6/sect 2[2.3] may be provided between the segregated propulsion machinery spaces. A means of clear indication of open/closed status of the doors shall be provided in the bridge and at the centralized control station. Unless specially approved by the flag Administration, these service access doors are not to be accounted for as the means of escape from the machinery space Category A required by the requirements of Regulation II-2/13 of SOLAS 1974, as amended.

5.5.3 Steering Systems

An independent steering system shall be provided for each propulsor. Regardless of the type and the size of vessel, each steering system is to meet the requirements of Regulation II-1/29.16 of SOLAS 1974, as amended.

The rudder design shall be such that the vessel can turn in either direction with one propulsion machine or one steering system inoperable.

For **IR$_2$-S** notation, the steering systems shall be separated such that a fire or flood in one steering compartment will not affect the steering system(s) in the other compartment(s), and performance in accordance with Chapter 3, Sect 5 [5.4.1] or Chapter 3 Sect 5 [5.4.2], as applicable, is maintained.

For I**R2** and I**R2-S** notations, in the event of steering system failure, means shall be provided to secure rudders in the amidships position.

5.5.4 Auxiliary Service Systems

At least two independent auxiliary service systems, including fuel oil service tanks, shall be provided and arranged such that a single failure will not result in propulsion performance inferior to that required by Chapter 3, Sect 5 [5.4.1] or Chapter 3 Sect 5 [5.4.2],as applicable. However, a single failure in the vital auxiliary machinery (e.g., pumps, heaters, etc.), excluding failure of fixed piping, shall not to result in reduction of the full propulsion capability. In order to meet this requirement, it will be necessary to either cross-connect the auxiliary service systems and size the components (pumps, heaters, etc.) to be capable of supplying two or more propulsion machines simultaneously, or provide duplicate components (pumps, heaters, etc.) in each auxiliary system in case one fails.

With the exception of the fuel oil service tank venting system, interconnections between auxiliary service systems will be considered, provided that the same are fitted with means (i.e., valves) to disconnect or isolate the systems from each other.

For I**R1-S** and I**R2-S** notations, the above-mentioned independent auxiliary service systems shall be segregated in the separate propulsion machinery spaces. With the exception of fuel oil service tank venting systems, interconnections of auxiliary service systems will be acceptable, provided that the required disconnection or isolation means are fitted at both sides of the bulkhead separating the propulsion machinery spaces. Position status of the disconnection or isolation means shall be provided at the navigation bridge and the centralized control station. Penetrations in the bulkhead separating the propulsion machinery spaces and steering gear flats (as in the case of I**R2-S** notation) are not to compromise the fire and watertight integrity of the bulkhead.

5.5.5 Electrical Distribution Systems

Electrical power generation and distribution systems shall be arranged such that following a single failure in the systems, the electrical power supply is maintained or immediately restored to the extent that the requirements in Chapter 3, Sect 5 [5.4] are met.

Where the vessel's essential equipment is fed from one main switchboard, the bus bars shall be divided into at least two sections. Where the sections are normally connected, detection of a short circuit on the bus bars is to result in automatic separation. The circuits supplying equipment essential to the operation of the propulsion and steering systems shall be divided between the sections such that a loss of one section will not result in performance inferior to

that defined in Chapter 3, Sect 5 [5.4]. A fully redundant power management system shall be provided so that each section of the switchboard can function independently.

For I**R1-S** and I**R2-S** notations, the ship service power generators, their auxiliary systems, the switchboard sections and the power management systems shall be located in at least two machinery spaces separated by watertight bulkheads with an A-60 fire classification. The power distribution shall be so arranged that a fire or flooding of one machinery space shall not to result in propulsion capability inferior to that defined in section 4 of this chapter. Where an interconnection is provided between the separate propulsion machinery spaces, a disconnection or isolation means shall be provided at both sides of the bulkhead separating the propulsion machinery spaces. Position status of the disconnection or isolation means shall be provided at the navigation bridge and the centralized control station. Fire or flooding of one machinery space shall not to result in propulsion capability inferior to that defined in Chapter 3, Sect 5 [5.4] . The power cables from the service generator(s) in one propulsion machinery space are not to pass through the other propulsion machinery space containing the remaining service generator(s).

Additionally, for I**R1-S** and I**R2-S** notations, subject to approval by the Administration, the requirements for self-contained emergency source of power may be considered satisfied without an additional emergency source of electrical power, provided that:

i) All generating sets and other required sources of emergency source of power are designed to function at full rated power when upright and when inclined up to a maximum angle of heel in the intact and damaged condition, as determined in accordance with relevant IMO/SOLAS Regulations In no case need the equipment be designed to operate when inclined more than 22.5° about the longitudinal axis and/or when inclined 10° about the transverse axis of the vessel.

ii) The generator set(s) installed in each machinery space is of sufficient capacity to meet the requirements of Chapter 6 Sections 2 [2.2.]and [2.3]

iii) The arrangements required in each machinery space are equivalent to those required by Chapter 6,Sections 2 [2.3.3[, [2.3.5] and Chapter 6,Sect 2 [2.3.8] so that a source of electrical power is available at all times for the services required by Chapter 6,Sect 2 [2.3]

5.5.6 Control and Monitoring Systems

The control systems shall be operable both independently and in combination from the bridge or the centralized control station. The mode of operation shall be clearly indicated at each position from which the propulsion machinery may be controlled.

It shall be possible to locally control the propulsion machinery and the propulsor.

For **R1-S** and **R2-S** notations, the control and monitoring system for the propulsor (e.g., controllable pitch propeller control), including all associated cabling, shall be duplicated in each space, and fire or flooding of one space shall not to adversely affect operation of the propulsor from the other space.

5.5.7 Communication Systems

The requirements of Chapter 6,Sect 2 [2.8] shall be complied with for all installed propulsion control positions.

For I**R1-S** and I**R2-S** notations, the communications cables to each control position are not to be routed through the same machinery space.

5.6 Fire Precautions

The requirements of this section apply to Category A machinery spaces only.

For I**R1** and I**R2** notations, the following requirements shall be complied with in order to minimize the risk of common damage due to a localized fire in the machinery space.

i) Each auxiliary services system shall be grouped and separated as far as practicable.

ii) Electrical cables supplying power to redundant equipment are to exit the switchboard and be routed to the equipment, as far apart as practicable.

5.7 Operating Manual

An operating manual, which is consistent with the information and criteria upon which the classification is based, shall be placed aboard the vessel for the guidance of the operating personnel. The operating manual is to give clear guidance to the vessel's crew about the vessel's redundancy features and how they may be effectively and speedily put into service in the event that the vessel's normal propulsion capability is lost. The operating manual is to include the following, as a minimum:

i) Vessel's name and INTLREG ID number
ii) Simplified diagram and descriptions of the propulsion systems in normal condition
iii) Simplified diagram and descriptions of the propulsion redundancy features
iv) Reduced propulsion capability in terms of estimated worst sea-states which the vessel may withstand without drifting (for vessels with **+** in the Class Notation)
v) Test results for the vessel's maneuverability at reduced speed (for vessels without **+** in the Class Notation).
vi) Step-by-step instructions for the use of the redundancy features
vii) Description of the communication systems
viii) Detailed instructions for local propulsion machinery control

The operating manual shall be submitted for review by INTLREG solely to verify the presence of the above information, which shall be consistent with the design information and limitations considered in the vessel's classification. INTLREG shall not responsible for the operation of the vessel.

Any modifications made to the existing propulsion systems shall be approved by INTLREG. The operating manual shall be updated accordingly and submitted to INTLREG for review.

5.8 Test and Trial

During the sea trial, the propulsion and steering capability shall be tested in accordance with an approved test program to verify compliance with this Section.

5.8.1 Fault Simulation Test

Simulation tests for the redundancy arrangements shall be carried out to verify that, upon any single failure, the propulsion and steering systems remain operational, or the back-up propulsion and steering systems may be speedily brought into service.

5.8.2 Communication System Test

The effectiveness of the communication systems, as required in Chapter 3,Sect 5 [5.5.7] , shall be tested to verify that local control of the propulsion systems may be carried out satisfactorily.

5.9 Survey After Construction

The surveys after construction shall be in accordance with the applicable requirements as contained in the INTLREG *Rules for Surveys Periodical Survey Part 1/Chapter 3*

SECTION 6 CONTRA-ROTATING PROPELLERS

Contents

6.1 General

6.1.1 Application

Contra-rotating propeller units having a rated power of 100 kW (135 hp) and over, intended for propulsion or for auxiliary services essential for propulsion, maneuvering and safety (Refer Chapter 1,Sect 1 [1.2.1] of the vessel, shall be designed, constructed, certified and installed in accordance with the provisions of this section.

Contra-rotating propeller systems having a rated power less than 100 kW (135 hp) are not required to comply with the provisions of this Section but shall be designed, constructed and equipped in accordance with good commercial and marine practice. Acceptance of such systems will be based on the manufacturer's affidavit, verification of nameplate data and subject to a satisfactory performance test after installation conducted in the presence of the Surveyor.

6.1.2 Basic Principles

Contra-rotating propeller systems may be designed using either of two arrangements:

i) One arrangement consists of a gear to effect opposing rotation between the two shafts, shafting and two propellers of opposite hand. The gear divides the power provided by the prime mover to the two propulsion shafts which rotate in opposite directions with one of the shafts rotating inside the bore of the other shaft. The outer shaft drives the forward propeller while the inner shaft drives the after propeller.

ii) Another arrangement consists of two prime movers arranged in line such that the propulsion shaft from the forward prime mover rotates inside the hollow propulsion shaft of the after prime mover.

For either arrangement discussed, the contra-rotating aftermost propeller is designed to recover rotational energy from the slipstream shed from the forward propeller and convert to additional thrust.

6.1.3 Definitions

Definitions pertaining to the various components and subsystems of a contra-rotating propeller system are listed as follows:

- Gears, Refer Part 5A-Chapter3-Sect 1[1.2] of the *INTLREG Rules for Building and Classing Steel Vessels.*
- Shafting, Refer Chapter 3, Sect 1 [1.2]
- Propellers, Refer Chapter 3, Sect 2 [2.1]

6.1.4 Plans and Particulars to be Submitted

Plans and particulars to be submitted for review are listed as follows:

- Gears, Refer Part 5A-Chapter3-Sect 1 [1.3] of the *INTLREG Rules for Building and Classing Steel Vessels*
- Shafting, Refer Chapter 3,Sect 1 [1.3]
- Propellers, Refer Chapter 3 Sect 2 [2.3]

6.2 Materials

Material requirements and testing for the various components and subsystems shall be in accordance with the following:

- Gears, Refer Part 5A-Chapter3-Sect 2 of the *INTLREG Rules for Building and Classing Steel Vessels*.
- Shafting, Refer Chapter 3,Sect 1 [1.4]
- Propellers, Refer Chapter 3, Sect 2 [2.4]

6.3 Design

6.3.1 Gears

The gear design shall be in accordance with the requirements in Part 5A-Chapter3-Sect 3 of the *Steel Vessels Rules*.

6.3.1.1 Gears with Multiple Prime Mover Inputs/Multiple Outputs

For single helical gears with arrangements utilizing multiple prime mover inputs, and multiple outputs (e.g., the contra-rotating shafts), the following analyses for all operating modes shall be conducted:

6.3.1.1.1 All bearing reactions

6.3.1.1.2 Tooth modifications

6.3.1.1.3 Load distributions on the gear teeth

6.3.1.1.4 Contact and tooth root bending stresses

A summary of the results of these analyses for each operating mode shall be submitted for review.

6.3.2 Shaft Diameters

The shaft design shall be in accordance with the requirements of Chapter 3,Sect 1 [1.4]

6.3.2.1 Alternative Criteria

As an alternative to the design equations shown in Chapter 3,Sect 1 [1.5.1] and [1.5.2] shafting design may be considered for approval on the basis of axial and torsional loads to be transmitted, bending moment and resistance against fatigue. A detailed stress analysis showing a factor of safety of at least 2.0 for fatigue failure shall be submitted for approval with all supporting data.

6.3.3 Propeller-end Seals

Effective means shall be provided to prevent water having access to either shaft at the part between the after end of the liner and the propeller hub on the outer shaft forward propeller and between the inner shaft and outer shaft and the after propeller hub and inner shaft.

6.3.4 Couplings and Clutches

The requirements for the following components, if installed are:

- Demountable couplings, Refer Chapter 3, Sect [1.11.1.4]
- Flexible couplings, Refer Chapter 2,Sect [1.9]
- Clutches, Refer Part 5A-Chapter4-Sect 3[3.10.6] of the *INTLREG Rules for Building and Classing Steel Vessels*
- Clutches intended for use in propulsion shafting shall be of an approved design

- Locking arrangements, Refer Chapter 3,Sect 1 [1.11.1.4]
- After assembly, all coupling bolts and associated nuts shall be fitted with locking arrangement.

6.3.5 Propulsion Shaft Vibrations

Torsional vibration calculations shall be submitted in accordance with Chapter 3,Sect1 [1.12]

Additional torsional vibration calculations shall be performed for shaft arrangements where the contra- rotating shafts are coupled through a gear. The calculations are to confirm for the two modes of operation when either the forward or the after propeller is isolated from the prime mover the shafting is free from the deleterious effects of torsional vibrations.

6.3.6 Propellers

The propeller designer is to provide the power absorbed at rated speed for both propellers. The propellers shall be designed in accordance with the requirements of .Chapter 3,Sect 2 [2.5] Arrangements shall be provided in the event of damage to either propeller or failure of one of the prime movers' auxiliary functions to be isolated from the propulsion system to permit the remaining propeller to continue to function.

6.3.7 Access for Inspection

Adequate access covers shall be provided to permit inspection of gear train without disassembling contra- rotating propeller unit.

6.3.8 Shaft Alignment

The alignment and each bearing load relative to the inner and outer shafts are dependent upon one another. An evaluation shall be submitted for the shafting system taking into consideration relative inclining angle between the inner and outer shafts, additional stresses in the shafting system resulting from the shaft alignment in relation to the location and spacing of the shaft bearings, Refer Chapter 3,Sect 1 [1.12]

6.3.9 Shaft Lubrication

The lubrication system shall be designed to provide all bearings, gear meshes and other parts requiring lubrication oil with an adequate amount of oil for both lubrication and cooling purposes. This shall be maintained under all operating conditions.

6.3.9.1 Anti-friction Bearings

If anti-friction bearings are installed, bearing lifetime calculations shall be submitted for review. In general, the bearing design shall be based on the bearing lifetime of 65,000 hours. Loading profile of the bearing used for the calculation shall be indicated in the calculations. The bearing lifetime must exceed the 5-years time between surveys; Refer INTLREG Part 1-Chapter 3

6.3.9.2 Oil-lubricated Bearings

If oil-lubricated bearings are installed, load carrying capacity calculations for white metal bearings shall be submitted or bearing lifetime calculations shall be submitted for roller bearings or similar. In general, the bearing design shall be based on the bearing lifetime of 65,000 hours. Loading profile of the bearing used for the calculation shall be indicated in the calculations. The bearing lifetime must exceed the 5-years time between surveys; Refer INTLREG Part 1-Chapter 3

6.3.9.3 Oil-lubricating System Sampling Arrangements

An arrangement for readily obtaining accurate oil samples shall be provided. The sampling point shall be taken from the lowest point in the oil lubricating system, as far as practicable. Also, the arrangements shall be such as to permit the effective removal of contaminants from the oil lubricating system.

6.3.10 Propeller Fitting

The requirements for propellers fitted to the tail shaft by a keyed fitting are in Ch 3,Sect [2.10]

Bolted to Tail Shaft

For propellers whose attachment method to the tail shaft is by a bolted connection, calculations shall be submitted for review. The strength of the bolted connection subjected to the forces from propulsion torque shall be at least 1.5 times that of the blade at design pitch conditions.

6.3.10.1 Keyless Fitting

For propellers whose attachment method to the tail shaft is by a keyless fitting refer to Chapter 3,Sect 2 [2.10.2] In addition, for the tail shaft supporting the forward propeller, calculations shall be submitted for review to verify stresses on the shaft inner surface do not exceed 70% of the minimum specified yield strength.

6.4 Controls and Instrumentation

The forward and aft propellers shall be provided with arrangements to be isolated from their power source. The power source may be a single unit or multiple units.

Individual visual and audible alarms shall be provided at the engine room control station to indicate:

i) Rpm for inner and outer shafts

ii) Lubricating oil pressure

iii) Lubricating oil tank low level

iv) High temperature lubricating oil

v) High bearing temperature for bearings inner shaft bearings and outer shaft bearings

a) For journal bearing arrangements, high bearing temperature for both the inner shaft bearings and outer shaft bearings, or

b) For anti-friction bearing (roller bearing) arrangements, high contamination level of metal particles in the lubricating oil for inner shaft roller bearings.

Control, monitoring and alarms shall be provided for local manual control and at the centralized control station. If **CCS** or **UM** notation is requested, remote control shall be provided on the navigation bridge as per Sections Part 6-8-3 and Part 6-8-4, as applicable.

6.5 Certification and Trial

Contra-rotating propeller units and associated equipment shall be inspected, tested and certified by INTLREG in accordance with the following requirements, as applicable:

- Diesel engines: Part 5A-Chapter 2-Sect 1 of the *INTLREG Rules for Building and Classing Steel Vessels*
  Gas turbines: Part 5A-Chapter 2-Sect 3 of the *INTLREG Rules for Building and Classing Steel Vessels*
- Electric motors: Chapter 6 Sect 4

- Gears: Part 5A-Chapter 3-Sect 1 of the *INTLREG Rules for Building and Classing Steel Vessels*
- Shafting: Chapter 3,Sect 1
- Propellers: Chapter 3,Sect 2

Upon completion of the installation, performance tests shall be carried out in the presence of a Surveyor in a sea trial. This is to include but not limited to running tests at intermittent or continuous rating, vessel turning tests and vessel maneuvering tests. The gear design shall be in accordance with the requirements in Part 5A-Chapter 3-Sect 3 of the *INTLREG Rules for Building and Classing Steel Vessels*.

CHAPTER 4 PUMPS AND PIPING SYSTEMS

CONTENTS

SECTION 1GENERAL

Contents

1.1 Construction and Installation

1.1.1 General Requirements

All vessels shall be provided with the necessary pumps and piping systems for safe and efficient operation in the service for which they are intended. Materials and workmanship shall be in accordance with good marine practice and to the satisfaction of the Surveyor. The arrangements and details are to comply with the following requirements which are applicable to all oceangoing vessels but which may be modified for vessels classed for limited service.

1.1.2 Piping Groups

To distinguish between detail requirements for the various systems, the piping on shipboard is divided into two groups.

Group I, in general, includes all piping intended for working pressures or temperatures in various services, as follows:

Service	*Pressure bar (kgf/cm^2, psi)*	*Temperature °C (°F)*
Vapor and Gas	over 10.3 (10.5, 150)	over 343 (650)
Water	over 15.5 (15.8, 225)	over 177 (350)
Lubricating Oil	over 15.5 (15.8, 225)	over 204 (400)
Fuel Oil	over 10.3 (10.5, 150)	over 66 (150)
Hydraulic Fluid	over 15.5 (15.8, 225)	over 204 (400)

Group II includes all piping intended for working pressures and temperatures below those stipulated under Group I. Group II also includes cargo-oil and tank cleaning piping in cargo area on oil carriers, and open- ended lines such as drains, overflows, engine exhausts, boiler escape pipes, and vents, regardless of the working pressures or temperatures.

1.2 Plans and Data to be Submitted

1.2.1 Plans

Before proceeding with the work, plans in accordance with Chapter 1,Sect 1[1.4] shall be submitted, showing clearly the diagrammatic details or arrangement of the equipment.

1.2.2 All Piping Systems

The plans are to consist of a diagrammatic drawing of each system accompanied by lists of material giving size, wall thickness, maximum working pressure and material of all pipes and the type, size, pressure rating and material of valves and fittings.

1.2.3 Booklet of Standard Details

A booklet of standard piping practices and details, including such items as bulkhead, deck and shell penetrations, welding details including dimensions, pipe joining details, etc., shall be submitted. Pipe welding details are to comply with Chapter 3 of the INTLREG *Rules for Materials and Welding (Part 2)*.

1.3 Material Tests and Inspection

1.3.1 Specifications and Purchase Orders

The appropriate material to be used for the various pipes, valves and fittings is indicated in this section. The material shall be made in accordance with the requirements of Chapter 3 of the INTLREG *Rules for Materials and Welding (Part 2)*, except that tests of material for valves, fittings, fluid power cylinders and Group II piping need not be witnessed by the Surveyor. Where electric resistance welding is used, the requirements of Chapter 3 of the above referenced Part 2 are also applicable. Copies in duplicate of the purchase orders for material requiring test and inspection at the mills or place of manufacture shall be forwarded to INTLREG for the information of the Surveyor.

1.3.2 Special Materials

If it is desired to use special alloys or other materials not covered by the Rules, the use of such materials will be specially considered for approval.

1.4 Definitions

1.4.1 Piping/Piping Systems

The terms *Piping* and *Piping Systems* include the pipe, fittings, system joints, method of joining and any internal or external liners, coverings and coatings required to comply with the performance criteria. For example, if the basic material needs a fire protective coating to comply with the fire endurance requirements, then the piping should be manufactured and tested with both the basic material and coating attached, and details shall be submitted to INTLREG for approval.

1.4.2 Joints

The term *Joint* refers to the method of connecting pipes by adhesive bonding, brazing, welding, bolted flanging, threading, etc.

1.4.3 Fittings

Pipe Fittings refer to piping components such as sleeves, bends, tees, elbows, flanges, etc., which are used to join together the sections of the pipe.

1.4.4 Positive Closing Valves

Positive Closing Valves are valves that are capable of maintaining a set position under all operating conditions.

1.4.5 Recognized Standard of Construction

Recognized Standards of Construction are published construction standards from organizations, such as but not limited to the American Society of Mechanical Engineers (ASME), American Society of Testing and Materials (ASTM), Department of Transportation (DOT), Japanese Industrial Standard (JIS), German Design Standard (DIN), British Standard Code of Practice (BSI), which are recognized by INTLREG as being acceptable standards for a specific purpose or service. Each standard shall be used independently and in a consistent manner.

1.4.6 Standard or Extra-Heavy Pipe

Pipe thickness referred to as *Standard* or *Extra-Heavy* are the equivalent of American National Standards Institute Schedule 40 and Schedule 80 pipe up to a maximum wall thickness of 9.5 mm (0.375 in.) and 12.5 mm (0.5 in.), respectively.

1.5 General Installation Details

1.5.1 Protection

Pipes, valves and operating rods shall be effectively secured and adequately protected from mechanical damage. These protective arrangements shall be fitted so that they may be removed to enable examination of the pipes, valves and operating rods.

1.5.2 Pipes Near Switchboards

The pipes leading in the vicinity of switchboards shall be avoided as far as possible. When such leads are necessary, care shall be taken to fit no flanges or joints over or near the switchboards unless provision is made to prevent any leakage from damaging the equipment.

1.5.3 Expansion or Contraction Stresses

Provision shall be made to take care of expansion or contraction stresses in pipes due to temperature changes or working of the hull. Suitable provisions include, but are not limited to, piping bends, elbows, offsets, changes in direction of the pipe routing or expansion joints. Slip joints of an approved type may be used in systems and locations where possible leakage will not be hazardous

Where expansion joints are used, the following requirements apply:

- *Pipe support.* Adjoining pipes shall be suitably supported so that the expansion joints do not carry any significant pipe weight.
- *Alignment.* Expansion joints are not to be used to make up for piping misalignment errors. Misalignment of an expansion joint reduces the rated movements and can induce severe stresses into the joint material, thus causing reduced service life. Alignment shall be within tolerances specified by the expansion joint manufacturer.
- *Anchoring.* Expansion joints shall be installed as close as possible to an anchor point. Where an anchoring system shall not used, control rods may be installed on the expansion joint to prevent excessive movements from occurring due to pressure thrust of the line.
- *Mechanical damage.* Where necessary, expansion joints shall be protected against mechanical damage.
- *Accessible location.* Expansion joints shall be installed in accessible locations to permit regular inspection and/or periodic servicing.
- *Mating flange.* Mating flanges shall be clean and usually of the flat faced type. When attaching beaded end flange expansion joints to raised face flanges, the use of a ring gasket is permitted. Rubber expansion joints with beaded end flange are not to be installed next to wafer type check or butterfly valves. Serious damage to the rubber flange bead can result due to lack of flange surface and/or bolt connection.

1.5.4 Molded Expansion Joints

Molded expansion joints may be Type Approved. Refer Part 1-Chapter1-Sect 11 of the INTLREG *Rules and Regulations for Classification of Steel Vessels (Part 1)*.

1.5.4.1 Circulating Water Systems

In machinery spaces molded expansion fittings of reinforced rubber or other suitable materials may be used circulating water piping systems . Such fittings shall be oil-resistant. The maximum working pressure shall not to be greater than 25% of the hydrostatic bursting pressure of the fitting as determined by a prototype test.

Manufacturer's name and the month and year of manufacture shall be embossed or otherwise permanently marked on the outside edge of one of the flanges or other easily examined area of all flexible expansion joints intended for use in seawater piping systems over 150 mm (6 in.). Plans of the molded or built-up flexible expansion joints in seawater piping systems over 150 mm (6 in.), including details of the internal reinforcement arrangements, shall be submitted for approval.

1.5.4.2 Oil Systems

Where molded expansion joints of composite construction utilizing metallic material, such as steel or stainless steel or equivalent material, with rubberized coatings inside and/or outside or similar arrangements are proposed for use in oil piping systems (fuel, lubricating, or hydraulic oil), the following requirements apply:

(a) Expansion joint ratings for temperature, pressure, movements and selection of materials shall be suitable for the intended service.

(b) The maximum allowable working pressure of the system shall not to be greater than 25% of the hydrostatic bursting pressure determined by a burst test of a prototype expansion joint. Results of the burst test shall be submitted.

(c) The expansion joints are to pass the fire-resistant test specified in Part 5A-Chapter 8-Sect 2[2.3.5]

(d) The expansion joints shall be permanently marked with the manufacturer's name and the month and year of manufacture.

1.5.4.3 Fire-Resistant Test

In order for a molded expansion joint of composite construction utilizing metallic material, as referenced in Sect1 [1.5.4.2] above, to be considered fire-resistant, a prototype of the molded expansion joint shall be subjected to a fire test for at least 30 minutes at a temperature of not less than 800°C (1472°F) while water at the maximum service pressure is circulated inside. The temperature of the water at the outlets shall not to be less than 80°C (176°F) during the test. The tested molded expansion joint shall be complete with end fittings and no leakage shall be recorded during or after the test. In lieu of maximum service pressure, the fire test may be conducted with the circulating water at a pressure of at least 5 bar (5.1 kgf/cm^2, 72.5 lb/in^2), and with a subsequent pressure test to twice the design pressure.

1.5.5 Bulkhead, Deck or Tank Top Penetrations

1.5.5.1 Watertight Integrity

Where it is necessary for pipes to penetrate watertight bulkheads, decks or tank tops, the penetrations shall be made by methods which will maintain the watertight integrity. For this purpose, bolted connections are to have bolts threaded into the plating from one side; through bolts are not to be used. Welded connections are either to be welded on both sides or to have full penetration welds from one side.

1.5.5.2 Fire tight Integrity

Where pipes penetrate bulkheads, decks or tank-tops which are required to be fire tight or smoke tight, the penetrations shall be made by approved methods which will maintain the same degree of fire tight or smoke tight integrity.

1.5.6 Damage Stability Consideration

Where installed within zones of assumed damage under damage stability conditions, piping that serves tanks and dry spaces, is also to be considered damaged. Damage to such piping shall not to lead to progressive flooding of spaces not assumed damaged. If it shall not practicable to route piping outside the zone of assumed damage, then means shall be provided to prevent progressive flooding. Such means, for example, may be the provision of a remotely operated valve in the affected piping. Alternatively, intact spaces that can be so flooded shall be assumed flooded in the damage stability conditions.

In addition, where open ended piping systems are located below the bulkhead deck and penetrate watertight subdivision bulkheads, means operable from above the bulkhead deck shall be provided to prevent progressive flooding through those piping systems which remain intact following damage to the vessel.

1.5.7 Collision Bulkhead Penetrations

1.5.7.1 Allowed Penetrations

A collision bulkhead may be penetrated only as follows:

i) Except as provided in Sect 1 [1.5.7.1] ii), the collision bulkhead may be pierced below the bulkhead deck by not more than one pipe for dealing with fluid in the forepeak tank, provided that the pipe is fitted with a screw down or butterfly valve capable of being operated from above the bulkhead deck; the valve chest being secured to the collision bulkhead inside the forepeak.

ii) If the forepeak is divided to hold two kinds of liquids, the collision bulkhead may be pierced below the margin line by two pipes, each of which is fitted as required by Sect 1 [1.5.7.1] i) provided there is no practical alternative to the fitting of such a second pipe and that, having regard to the additional subdivision provided in the forepeak, the safety of the vessel is maintained.

iii) The valve in Sect 1 [1.5.7.1 ii] may be fitted of on the after side of the collision bulkhead provided that the valve is readily accessible under all service conditions and the space in which they are located shall not a cargo space. Local operation of the valve is acceptable.

1.5.7.2 Penetrations Details

Piping penetrating collision bulkheads is to comply with the following requirements:

i) Cast iron shall not to be used for these valves. The use of nodular iron, also known as ductile iron or spheroidal-graphite iron, will be accepted, provided the material has an elongation not less than 12% in 50 mm (2 in.).

ii) Tanks forward of the collision bulkhead are not to be arranged for the carriage of oil or other liquid substances that are flammable.

1.5.8 Sluice Valves and Cocks

No valve or cock for sluicing purposes shall be fitted on a collision bulkhead. Sluice valves or cocks may be fitted only on other watertight bulkheads, where they are accessible for examination at all times. The control rods shall be operable from the bulkhead deck and shall be provided with an indicator to show whether the valve or cock is open or closed. The control rods are also to be properly protected from injury and their weight shall not to be supported by the valve or cock.

1.5.9 Relief Valves

All systems which may be exposed to pressures greater than that for which they are designed shall be safeguarded by suitable relief valves or the equivalent. Pressure containers such as evaporators, heaters, etc., which may be isolated from a protective device in the line are required such devices either directly on the shell or between the shell and the isolation valve.

1.5.9.1 Exceptions

In pumping systems such as oil piping and fire main, where relief valves are ordinarily required at the pump, such valves need not be fitted when the system is served only by centrifugal pumps so designed that the pressure delivered cannot exceed that for which the piping is designed.

1.5.10 Instruments

1.5.10.1 Temperature.

Thermometer wells are required to be used, where thermometers or other temperature sensing devices are fitted in piping systems, so that the devices can be removed without impairing the integrity of the pressurized system

1.5.10.2 Pressure.

Valves are to be provided, where pressure gauges or other pressure sensing devices are fitted in piping systems, so that the devices can be isolated and removed without impairing the integrity of the pressurized system.

1.5.10.3 Tanks

Pressure, temperature and level sensing devices installed on tanks at locations where they are subjected to a static head of liquid shall be fitted with valves or arranged such that they may be removed without emptying the tank.

1.5.11 Flexible Hoses

1.5.11.1 Definition

A flexible hose assembly is a short length of metallic or non-metallic hose normally with prefabricated end fittings ready for installation.

1.5.11.2 Scope

The requirements of Sections 1.[1.5.11.3] to [1.5.11.6] apply to flexible hoses of metallic or non-metallic material intended for a permanent connection between a fixed piping system and items of machinery. The requirements may also be applied to temporary connected flexible hoses or hoses of portable equipment.

Flexible hose assemblies as defined in Sect 1[1.5.11.1.1] are acceptable for use in oil fuel, lubricating, hydraulic and thermal oil systems, fresh water and sea water cooling systems, compressed air systems, bilge and ballast systems. The flexible hoses are acceptable for steam systems with pressure below 7 bar (7.1 kgf/cm^2, 101.5 psi) and temperature below 150°C (302°F), where they comply with Sect1 [1.5.11]

Flexible hoses are not acceptable in high pressure fuel oil injection systems.

These requirements for flexible hose assemblies are not applicable to hoses intended to be used in fixed fire extinguishing systems.

1.5.11.3 Design and Construction

(a) Hose material. Flexible hoses shall be designed and constructed in accordance with recognized National or International standards acceptable to INTLREG. Flexible hoses constructed of rubber or plastics materials and intended for use in bilge, ballast, compressed air, oil fuel, lubricating, hydraulic and thermal oil systems are to incorporate a single or double closely woven integral wire braid or other suitable material reinforcement. Where rubber or plastics materials hoses shall be used in oil supply lines to burners, the hoses are to have external wire braid protection in addition to the integral reinforcement. Flexible hoses for use in steam systems shall be of metallic construction.

(b) Hose end fittings. Flexible hoses shall be complete with approved end fittings in accordance with manufacturer's specification. Flanged end connections are to comply with Ch 4, Sect [2.9] and threaded end connections with Chapter 4 Sect 2 [2.7.1] as applicable and each type of hose/fitting combination shall be subject to prototype testing to the same standard as that required by the hose with particular reference to pressure and impulse tests.

The use of hose clamps and similar types of end attachments shall not acceptable for flexible hoses in piping systems for steam, flammable media, starting air or for sea water, where failure may result in flooding*. In other piping systems, the use of hose clamps may be accepted where the working pressure is less than 5 bar (5.1 kgf/cm^2, 72.5 psi) and provided there are double clamps at each end connection. The hose clamps shall be at least 12 mm (0.5 in.) wide and are not to be dependent upon spring tension to remain fastened.

* *Note:* For sea water systems, where flooding can be prevented by the installation of a readily accessible shutoff valve immediately upstream of the hose, double clamps at each end connection may be accepted.

(c) Fire resistance. Flexible hose assemblies constructed of non-metallic materials intended for installation in piping systems for flammable media and sea water systems where failure may result in flooding shall be of a fire-resistant type**. Fire resistance shall be demonstrated by testing to ISO 15540 and ISO 15541.

** *Note:* The installation of a shutoff valve immediately upstream of a sea water hose does not satisfy the requirement for fire resistant type hose.

(d) Hose application. Flexible hose assemblies shall be selected for the intended location and application taking into consideration ambient conditions, compatibility with fluids under working pressure and temperature conditions consistent with the manufacturer's instructions and other relevant requirements of this Section.

Flexible hose assemblies intended for installation in piping systems where pressure pulses and/or high levels of vibration are expected to occur in service, shall be designed for the maximum expected impulse peak pressure and forces due to vibration. The tests required by Sect1 [1.5.11.5] below are to take into consideration the maximum anticipated in-service pressures, vibration frequencies and forces due to installation.

1.5.11.4 Installation

In general, flexible hoses shall be limited to a length necessary to provide for relative movement between fixed and flexibly mounted items of machinery, equipment or systems.

Flexible hose assemblies are not to be installed where they may be subjected to torsion deformation (twisting) under normal operating conditions.

The number of flexible hoses, in piping systems shall be kept to minimum and shall be limited for the purpose stated in Sect 1 [1.5.11.2] above

Where flexible hoses are intended to be used in piping systems conveying flammable fluids that are in close proximity of heated surfaces the risk of ignition due to failure of the hose assembly and subsequent release of fluids shall be mitigated as far as practicable by the use of screens or other similar protection.

Flexible hoses shall be installed in clearly visible and readily accessible locations (i.e., the hose shall be located such that inspection can be accomplished without the need to remove any bolted inspection plate or similar obstruction. A mirror or other means may be used for inspection where space is limited).

The installation of flexible hose assemblies shall be in accordance with the manufacturer's instructions and use limitations with particular attention to the following:

- Orientation
- End connection support (where necessary)
- Avoidance of hose contact that could cause rubbing and abrasion
- Minimum bend radii

1.5.11.5 Tests

(a) Test procedures. Acceptance of flexible hose assemblies is subject to satisfactory prototype testing. Prototype test programs for flexible hose assemblies shall be submitted by the manufacturer and shall be sufficiently detailed to demonstrate performance in accordance with the specified standards.

The tests are, as applicable, to be carried out on different nominal diameters of hose type complete with end fittings for pressure, burst, impulse resistance and fire resistance in accordance with the requirements of the relevant standard. The following standards shall be used as applicable.

- ISO 6802 – Rubber and plastics hoses and hose assemblies – Hydraulic pressure impulse test without flexing.
- ISO 6803 – Rubber and plastics hoses and hose assemblies – Hydraulic pressure impulse test with flexing.
- ISO 15540 – Ships and marine technology – Fire resistance of hose assemblies – Test methods.
- ISO 15541 – Ships and marine technology – Fire resistance of hose assemblies – Requirements for test bench.
- ISO 10380 – Pipework – Corrugated metal hoses and hose assemblies.
- Other standards may be accepted where agreed.

(b) Burst test. All flexible hose assemblies shall be satisfactorily prototype burst tested to an international standard to demonstrate they are able to withstand a pressure not less than four (4) times its design pressure without indication of failure or leakage.

*Note:*The international standards (e.g., EN or SAE for burst testing of non-metallic hoses) require the pressure to be increased until burst without any holding period at 4 x MWP.

1.5.11.6 Marking

Flexible hoses shall be permanently marked by the manufacturer with the following details:

- Hose manufacturer's name or trademark.
- Date of manufacture (month/year).
- Designation type reference.
- Nominal diameter.
- Pressure rating
- Temperature rating.

Where a flexible hose assembly is made up of items from different manufacturers, the components shall be clearly identified and traceable to evidence of prototype testing.

1.5.12 Control of Static Electricity.

In order to prevent dangerous build-up of static charges resulting from the flow of fluid in piping, the following items are to be earthed (grounded) to the hull such that the resistance between any point on the piping and the hull (across joints, pipe to hull) does not exceed 1 MΩ:

- Piping and independent tanks containing fluids having flash point of 60°C (140°F) or less.
- Piping that is routed through hazardous areas.

This can be achieved if the items are directly, or via their supports, either welded or bolted to the hull. Bonding straps are required for items not permanently connected to the hull, for example:

- Independent cargo tanks
- Piping which is electrically insulated from the hull
- Piping which has spool pieces arranged for removal

Bonding straps are to be:

- Installed in visible locations
- Protected from mechanical damage
- Made of corrosion-resistant material

This requirement does not apply to tank containers.

1.5.13 Leakage Containment

For areas where leakage may be expected, such as oil burners, purifiers, oil drains, valves under day tanks, etc., means of containing the leakage shall be provided. Where drain pipes are fitted for collected leakages, they shall be led to a suitable oil drain tank not forming part of an overflow system

SECTION 2 PUMPS, PIPES, VALVES AND FITTINGS

Contents

2.1 Pumps

2.1.1 General

For self-propelled vessels 500 gross tons and above, the following pumps are to meet the test requirements of Sections 2 [2.1.2] ,[2.1.3], [2.1.4]

- Fire pump, including emergency fire pump
- Other fire fighting service pumps, such as, pumps for fixed water-based systems, or equivalent, local application fire-fighting systems, sprinkler systems, deck foam systems, etc.
- Bilge pump
- Ballast pump
- Hydraulic pumps for steering gears, anchor windlasses and variable pitch propellers
- Pumps associated with inert gas systems, i.e.: Fuel oil pumps for boilers/inert gas generators Cooling water pumps for flue gas scrubber

The tests shall be carried out at the manufacturer's plant in the presence of the Surveyor. The capacity test will not be required nor will the hydrostatic test need to be witnessed by the Surveyor for individual pumps assembled on a production line basis, provided the Surveyor is satisfied from periodic inspections and from the manufacturer's quality assurance procedures that the pump capacities are acceptable and that hydrostatic testing is being performed. Refer Chapter 1,Sect 1 [1.2] For pumps associated with reciprocating internal combustion engines and reduction gears, Refer Chapter 2,Sect 1 [1.10]

2.1.2 Hydrostatic Test

All pumps shall be hydrostatically tested to 1.5*P*, but not less than 3.9 bar (4 kgf/cm^2, 57 psi), where *P* is the maximum working pressure of the part concerned. When the suction and discharge sides of the pump are tested independently, the pump suction shall be tested to 1.5 times P_S, but not less than 3.9 bar (4 kgf/cm^2, 57 psi), where P_S is the maximum pressure available from the system at the suction inlet. For steering gear pumps, also Refer Chapter 3,Sect 3 [3.8.1].

2.1.3 Capacity Test

Pump capacities shall be checked with the pump operating at design conditions (rated speed and pressure head). For centrifugal pumps, the pump characteristic (head capacity) design curve shall be verified to the satisfaction of the Surveyor.

2.1.4 Relief Valve Capacity Test

For positive displacement pumps with an integrated relief valve, the valve's setting and full flow capacity corresponding to the pump maximum rating shall be verified. The operational test for relief valve capacity may be waived if previous satisfactory tests have been carried out on similar pumps.

2.2 Pressure Tests

2.2.1 General

In addition to the testing and inspection of materials, as required in Chapter 3 of the INTLREG *Rules for Materials and Welding (Part 2)*, the following tests on the fabricated piping shall be witnessed by the Surveyor after bending and the attachment of flanges.

Small bore pipes and tubes of less than 15 mm outside diameter may be exempted from the required hydrostatic tests.

2.2.2 Fuel Oil Service System

Pressure lines shall be tested before installation to 1.5 times the design pressure of the system, but not less than 3.4 bar (3.5 kgf/cm^2, 50 psi).

2.2.3 Fuel Oil Suction and Transfer Lines

Transfer systems and fuel oil suction lines shall be tested before installation to 3.4 bar (3.5 kgf/cm^2, 50 psi).

2.2.4 Starting Air Piping

Piping in starting-air systems shall be tested, preferably before installation, to 1.5 times the design pressure of the system.

2.2.5 Hydraulic Power Piping

After fabrication, the hydraulic power piping system or each piping component shall be tested to 1.5 times the design pressure. For steering gear piping tests, Refer Part 5A-Chapter 6-Sect 5 [5.3]. For controllable pitch propeller system piping, a test, including a check of relief valve operation, shall be performed after installation in the presence of the Surveyor.

2.2.6 All Piping

After installation, all piping shall be tested under working conditions.

Where it shall not possible to carry out the required hydrostatic tests for all segments of pipes and integral fittings before installation, the remaining segments, including the closing seams, may be so tested after installation. Or, where it is intended to carry out all of the required hydrostatic tests after installation, such tests may be conducted in conjunction with those required by this paragraph. In both of these respects, testing procedures shall be submitted to the Surveyor for acceptance.

2.2.7 Specific Systems

2.2.7.1 Gas and Liquid Fuel Systems and Heating Coils in Tanks

The following piping systems shall be hydrostatically tested in the presence of the Surveyor to 1.5*P*, but not less than 4 bar (4.1 kgf/cm^2, 58 psi), after installation:

i) Gas and liquid fuel systems

ii) Heating coils in tanks

2.2.8 Hydrostatic Tests of Shell Valves

All valves intended for installation on the side shell at or below the load waterline, including those at the sea chests, shall be hydrostatically tested before installation and in the presence of the Surveyor to a pressure of at least 5 bar (5.1 kgf/cm^2, 72.5 psi).

2.2.9 Pneumatic Tests in Lieu of Hydrostatic Tests

In general, a pneumatic test in lieu of a hydrostatic test shall not permitted. Where it is impracticable to carry out the required hydrostatic test, a pneumatic test may be considered. In such cases, the procedure for carrying out the pneumatic test, having regard to safety of personnel, shall be submitted to the applicable INTLREG THO Office for special consideration.

2.3 Metallic Pipes

2.3.1 Test and Inspection of Group I Piping

Pipes intended for use in Group I piping systems shall be tested in the presence of and inspected by the Surveyor in accordance with Chapter 3 of the INTLREG *Rules for Materials and Welding (Part 2)* or such other appropriate material specification as may be approved in connection with a particular design. Refer Part 5A-Chapter8-Sect 6 [6.2.3] for pipe used in hydraulic systems.

2.3.2 Steel Pipe

2.3.2.1 Seamless Pipe

Seamless-drawn steel pipe may be used for all purposes.

2.3.2.2 Welded Pipe

Electric-resistance-welded steel pipe may be used for temperatures up to 343°C (650°F).

Consideration will be given to the use of electric-resistance-welded (ERW) pipe for use above 343°C (650°F) where the material is shown to be suitable for the intended service (i.e. in a non- corrosive environment where the design temperature is below the lowest graphitization temperature specified for the material, etc.). Furnace butt-welded pipe up to and including 115 mm O.D. (4 in. NPS) may be used for Group II piping for temperatures up to 232°C (450°F), but shall not to be used for flammable or combustible fluids.

2.3.3 Copper Pipe

Seamless-drawn and welded copper pipe, unless otherwise prohibited, may be used for all purposes where the temperature does not exceed 208°C (406°F) and within the limitations specified in the material specification.

2.3.4 Brass Pipe

Seamless-drawn brass pipe, unless otherwise prohibited, may be used where the temperature does not exceed 208°C (406°F).

2.3.5 Other Materials

Piping containing flammable fluids shall be constructed of steel or other materials approved by INTLREG. Other equivalent material with a melting point above 930°C (1706°F) and with an elongation above 12% may be accepted. Aluminum and aluminum alloys which are characterized by low melting points, below 930°C (1706°F), are considered heat sensitive materials and are not to be used to convey flammable fluids, except for such piping as arranged inside cargo tanks or heat exchangers or as otherwise permitted for engine attached filters, Refer Part 5A-Chapter 8-Sect 2 [2.2.4]of the *INTLREG Rules for Building and Classing Steel Vessels*.

On oil tankers and chemical tankers aluminized pipes are prohibited in cargo tanks, cargo deck tank area, pump rooms, cofferdams, or other areas where cargo vapor may accumulate. Aluminized pipes may be permitted in ballast tanks, in inerted cargo tanks, and, provided the pipes are protected from accidental impact, in hazardous areas on open deck.

2.3.6 Design

2.3.6.1 Maximum Allowable Working Pressure and Minimum Thickness

The maximum allowable working pressure and the minimum thickness of pipes shall be determined by the following equations, with due consideration being given to the reduction in thickness at the outer radius of bent pipes:

$$W = \frac{KS(t-C)}{D-M(t-C)} \qquad t = \frac{WD}{KS+MW} + C$$

where

W = maximum allowable working pressure, in bar, kgf/cm^2 (psi). Refer Note 1.

t = minimum thickness of pipe, in mm (in.). Refer Note 5.

K = 20 (200, 2)

D = actual external diameter of pipe, in mm (in.)

S = maximum allowable fiber stress, in N/mm^2 (kgf/mm^2, psi) from Part 5B-Chapter4-Sect 2/Table 4.2.1.

Refer Note 2.

M = factor from Part 5B-4-2/Table 4.2.1

C = allowance for threading, grooving or mechanical strength

= 1.65 mm (0.065 in.) for plain-end steel or wrought-iron pipe or tubing up to 115 mm O.D. (4 in. NPS). Refer Note 3.

= 0.00 mm (0.000 in.) for plain-end steel or wrought-iron pipe or tubing up to 115 mm O.D. (4 in. NPS) used for hydraulic piping systems. Refer Note 3.

= 0.00 mm (0.000 in.) for plain-end steel or wrought-iron pipe or tubing 115 mm

O.D. (4 in. NPS) and larger. Refer Note 3.

= 1.27 mm (0.05 in.) for all threaded pipe 17 mm O.D. ($^3/_8$ in.) and smaller

= depth of thread, *h,* for all threaded pipe over 17 mm O.D. ($^3/_8$ in.). Refer Note 4.

= depth of groove for grooved pipe

= 0.00 mm (0.000 in.) for plain-end nonferrous pipe or tubing. Refer Note 3.

Notes:

1 The value of *W* used in the equations shall be not less than 8.6 bar (8.8 kgf/cm^2, 125 psi), except that for suction and other low-pressure piping of nonferrous material, the actual working pressure may be applied if a suitable addendum is provided against erosion and outside damage. However, in no case is the value of *W* to be less than 3.4 bar (3.5 kgf/cm^2, 50 psi) for use in the equations.

2 Values of *S* for other materials are not to exceed the stress permitted by ASME B31.1 Code for Pressure Piping, Power Piping.

3 Plain-end pipe or tubing includes those joined by any method in which the wall thickness shall not reduced.

4 The depth of thread, *h,* may be determined by the equation $h = 0.8/n$ where n is the number of threads per inch, or in metric units by the equation $h = 0.8n$ where n is the number of mm per thread.

5 If pipe is ordered by its nominal wall thickness, the manufacturing tolerance on wall thickness shall be taken into account.

2.3.6.2 Pipe Bending

Pipe bending shall be in accordance with Part 2-Chapter 2-Sect 17 [17.13] of the INTLREG *Rules for Materials and Welding (Part 2)*. Alternatively, bending in accordance with a recognized standard (e.g., ASME B31.1- Section 129.1 and 129.3) or other approved specification to a radius that will result in a surface free of cracks and substantially free of buckles may be acceptable.

2.3.7 Working Pressure and Thickness – Alternative Consideration

Consideration will be given to the maximum allowable working pressure and the minimum thickness of piping determined from criteria of applicable recognized standards.

TABLE 4.2.1

Allowable Stress Values *S* for Steel Piping N/mm^2 (kgf/mm^2, psi)

INTLREG.Gr.ASTM (Grade) Nominal Composition	Tensile Strength	Service Temperature—Degrees C (F)			
		-29°C (20°F)to 334°C (650°F)	372°C (700°F)	399°C (750°F)	427°C (800°F)
M		M = 0.8	M = 0.8	M = 0.8	M = 0.8
(Gr. 1) Elec. res. Carbon Steel	310 (31.5, 45000)	46.9 (4.78, 6800)	46.6 (4.75, 6500)		
(Gr. 2) Elec. res. Carbon Steel	330 (33.7, 48000)	70.3 (7.17, 10200)	68.3 (6.96, 9900)	62.8 (6.40, 9100)	53.1 (5.41, 7700)
Seamless Carbon Steel	330 (33.7, 48000)	82.8 (8.44, 12000)	80.6 (8.22, 11700)	73.7 (7.52, 10700)	62.1 (6.33, 9000)
(Gr. 3) Elec. res. Carbon Steel	415 (42, 60000)	88.3 (9.0, 12800)	84.1 (8.58, 12200)	75.8 (7.73, 11000)	63.4 (6.47, 9200)
Seamless Carbon Steel	415 (42, 60000)	103.5 (10.55, 15000)	99.2 (10.12, 14400)	89.6 (9.14, 13000)	74.4 (7.59, 10800)
(Gr. 4) Carbon Steel	330 (33.7, 48000)	82.8 (8.44, 12000)	80.7 (8.23, 11700)	73.7 (7.52, 10700)	62.1 (6.33, 9000)
(Gr. 5) Carbon Steel	415 (42, 60000)	103.5 (10.55, 15000)	99.2 (10.12, 14400)	89.6 (9.14, 13000)	74.4 (7.59, 10800)

Notes:

1 Intermediate values of *S* may be determined by interpolation.

2 For grades of piping other than those given in Table 4.2.1 *S* values are not to exceed those permitted by ASME B31.1 Code for Pressure Piping

3 Consideration shall be given to the possibility of graphite formation in carbon steel at temperatures above 425°C (800°F).

2.4 Plastic Pipes

2.4.1 General

Pipes and piping components made of thermoplastic or thermosetting plastic materials with or without reinforcement may be used in piping systems referred to in Table 4.2.2 subject to compliance with the following requirements. For the purpose of these Rules, “plastic” means both thermoplastic and thermosetting plastic materials with or without reinforcement, such as polyvinyl chloride (PVC) and fiber reinforced plastics (FRP). Plastic includes synthetic rubber and materials of similar thermo/mechanical properties.

2.4.2 Plans and Data to be Submitted

Rigid plastic pipes shall be in accordance with a recognized national or international standard acceptable to INTLREG. Specification for the plastic pipe, including thermal and mechanical properties and chemical resistance, shall be submitted for review together with the spacing of the pipe supports.

The following information for the plastic pipes, fittings and joints shall be submitted for approval.

2.4.2.1 General Information

i) Pipe and fitting dimensions

ii) Maximum internal and external working pressure

iii) Working temperature range

iv) Intended services and installation locations

v) Level of fire endurance

vi) Electrically conductive

vii) Intended fluids

viii) Limits on flow rates

ix) Serviceable life

x) Installation instructions

xi) Details of marking

2.4.2.2 Drawings and Supporting Documentation

i) Certificates and reports for relevant tests previously carried out.

ii) Details of relevant standards.

iii) All relevant design drawings, catalogues, data sheets, calculations and functional descriptions.

iv) Fully detailed sectional assembly drawings showing pipe, fittings and pipe connections.

2.4.2.3 Materials

i) Resin type.

ii) Catalyst and accelerator types and concentration employed in the case of reinforced polyester resin pipes or hardeners where epoxide resins are employed.

iii) A statement of all reinforcements employed where the reference number does not identify the mass per unit area or the text number of a roving used in a filament winding process, these shall be detailed.

iv) Full information regarding the type of gel-coat or thermoplastic liner employed during construction, as appropriate.

v) Cure/post-cure conditions. The cure and post-cure temperatures and times employ for given resin/reinforcement ratio.

vi) Winding angle and orientation.

2.4.3 **Design**

2.4.3.1 Internal Pressure

A pipe shall be designed for an internal pressure not less than the design pressure of the system in which it will be used. The maximum internal pressure, P_{int}, for a pipe shall be the lesser of the following:

$$P_{\text{int}} = \frac{P_{sth}}{4} \qquad P_{\text{int}} = \frac{P_{lth}}{2.5}$$

where

P_{sth} = short-term hydrostatic test failure pressure

P_{lth} = long-term hydrostatic test failure pressure (> 100,000 hours) The hydrostatic tests shall be carried out under the following standard conditions:

- Atmospheric pressure = 1 bar (1 kgf/cm^2, 14.5 psi)
- Relative humidity = 30%
- Fluid temperature = 25°C (77°F)

The hydrostatic test failure pressure may be verified experimentally or determined by a combination of testing and calculation methods which shall be submitted to INTLREG for approval.

2.4.3.2 External Pressure

External pressure shall be considered for any installation which may be subject to vacuum conditions inside the pipe or a head of liquid on the outside of the pipe. A pipe shall be designed for an external pressure not less than the sum of the pressure imposed by the maximum potential head of liquid outside the pipe plus full vacuum, 1 bar (1 kgf/cm^2, 14.5 psi), inside the pipe. The maximum external pressure for a pipe shall be determined by dividing the collapse test pressure by a safety factor of 3.

The collapse test pressure may be verified experimentally or determined by a combination of testing and calculation methods which shall be submitted to INTLREG for approval.

2.4.3.3 Axial Strength

2.4.3.3(a) The sum of the longitudinal stresses due to pressure, weight and other dynamic and sustained loads shall not to exceed the allowable stress in the longitudinal direction.

When determining the longitudinal stresses in the system, forces due to thermal expansion, contraction and external load are required to be considered, wherever applicable.

2.4.3.3(b) In the case of fiber reinforced plastic pipes, the sum of the longitudinal stresses shall not to exceed one-half of the nominal circumferential stress derived from the maximum internal pressure determined according to Sect 2 [2.4.3 unless the allowable longitudinal stress is verified experimentally or by a combination of testing and calculation methods.

2.4.3.4 Temperature

The maximum allowable working temperature of a pipe shall be in accordance with the manufacturer's recommendations, but in each case, it shall be at least 20°C (36°F) lower than the minimum heat distortion temperature of the pipe material determined according to ISO 75 method A or equivalent. The minimum heat distortion temperature shall not to be less than 80°C (176°F). This minimum heat distortion temperature requirement shall not applicable to pipes and pipe components made of thermoplastic materials, such as polyethylene (PE), polypropylene (PP), polybutylene (PB) and intended for non-essential services.

Where low temperature services are considered, special attention shall be given with respect to material properties.

2.4.3.5 Impact Resistance

Plastic pipes and joints are to have a minimum resistance to impact in accordance with a recognized national or international standard such as ASTM D2444 or equivalent. After the impact resistance is tested, the specimen shall be subjected to hydrostatic pressure equal to 2.5 times the design pressure for at least one hour.

2.4.3.6 Fire Endurance

Table 4.2.2 specifies fire endurance requirements for pipes based upon system and location. Pipes and their associated fittings whose functions or integrity are essential to the safety of the vessel are to meet the indicated fire endurance requirements which are described below.

i) *Level 1* will ensure the integrity of the system during a full scale hydrocarbon fire and is particularly applicable to systems where loss of integrity may cause outflow of flammable liquids and worsen the fire situation. Piping having passed the fire endurance test specified in Chapter 4,Sect 2 [2.4.7] for a duration of a minimum of one hour without loss of integrity in the dry condition is considered to meet Level 1 fire endurance standard (L1).

Level 1W – Piping systems similar to Level 1 systems except these systems do not carry flammable fluid or any gas and a maximum 5% flow loss in the system after exposure is acceptable. The flow loss must be taken into account when dimensioning the system.

ii) *Level 2* intends to ensure the availability of systems essential to the safe operation of the vessel, after a fire of short duration, allowing the system to be restored after the fire has been extinguished. Piping having passed the fire endurance test specified in Chapter 4,Sect 2[2.4.7] for a duration of a minimum of 30 minutes without loss of integrity in the dry condition is considered to meet Level 2 fire endurance standard (L2).

Level 2W – Piping systems similar to Level 2 systems except a maximum 5% flow loss in the system after exposure is acceptable. The flow loss must be taken into account when dimensioning the system.

iii) *Level 3* is considered to provide the fire endurance necessary for a water filled piping system to survive a local fire of short duration. The system's functions are capable of being restored after the fire has been extinguished. Piping having passed the fire endurance test specified in Ch 4, Sect 2[2.4.8] for a duration of a minimum of 30 minutes without loss of integrity in the wet condition is considered to meet Level 3 fire endurance standard (L3).

Where a fire protective coating of pipes and fittings is necessary for achieving the fire endurance standards required, the following requirements apply.

i) Pipes are generally to be delivered from the manufacturer with the protective coating applied, with on-site application limited to that necessary for installation purposes (i.e., joints). Refer Chapter 4,Sect 2 [2.4.4.7] regarding the application of the fire protection coating on joints.

ii) The fire protection properties of the coating are not to be diminished when exposed to salt water, oil or bilge slops. It shall be demonstrated that the coating is resistant to products likely to come in contact with the piping.

iii) In considering fire protection coatings, such characteristics as thermal expansion, resistance against vibrations and elasticity shall be taken into account.

iv) The fire protection coatings are to have sufficient resistance to impact to retain their integrity.

v) Random samples of PIPE shall be tested to determine the adhesion qualities of the coating to the pipe.

2.4.3.7 Flame Spread

2.4.3.7(a) *Plastic Pipes.* All pipes, except those fitted on open decks and within tanks, cofferdams, void spaces, pipe tunnels and ducts, are to have low flame spread characteristics. The test procedures in IMO Resolution A.653(16) *Recommendation on Improved Fire Test Procedures for Surface Flammability of Bulkhead, Ceiling, and Deck Finish Materials*, modified for pipes as indicated in Sect 2 [2.4.3.9] of this section, shall be used for determining the flame spread characteristics. Piping materials giving average values for all of the surface flammability criteria not exceeding the values listed in Resolution A.653(16) are considered to meet the requirements for low flame spread.

Alternatively, flame spread testing in accordance with ASTM D635 may be used in lieu of the IMO flame spread test, provided such test is acceptable to the Administration.

2.4.3.7(b) Multi-core Metallic Tubes Sheathed by Plastic Materials . The multi-core tubes in "bundles" made of stainless steel or copper tubes covered by an outer sheath of plastic material are to comply with the flammability test criteria of IEC 60332-3-22 or 60332-3-21, for Category A or A F/R, respectively. Alternatively, the tube bundles complying with at least the flammability test criteria of IEC 60332-1-2 or a test procedure equivalent thereto are acceptable provided they are installed in compliance with approved fire stop arrangements.

2.4.3.8 Electrical Conductivity

2.4.3.8(a) Piping conveying fluids with a conductivity less than 1000 pico-siemens per meter shall be electrically conductive.

2.4.3.8(b) Regardless of the fluid being conveyed, plastic pipes shall be electrically conductive if the piping passes through a hazardous area.

2.4.3.8(c) Where electrically conductive pipe is required, the resistance per unit length of the pipes and fittings shall not to exceed 1×10^5 Ohm/m (3×10^4 Ohm/ft). Refer also Part Sect 2 [2.4.4.4]

2.4.3.8(d) If the pipes and fittings are not homogeneously conductive, the conductive layers shall be protected against the possibility of spark damage to the pipe wall.

2.4.3.9 Marking

In accordance with a recognized standard, pipes and other components are required to be permanently marked with identification.. Identification is to include pressure ratings, the design standard that the pipe or fitting is manufactured in accordance with, the material with which the pipe or fitting is made, and the date of fabrication.

2.4.4 Installation of Plastic Pipes

2.4.4.1 Supports

2.4.4.1(a) Selection and spacing of pipe supports in shipboard systems shall be determined as a function of allowable stresses and maximum deflection criteria. Support spacing shall not to be greater than the pipe manufacturer's recommended spacing. The selection and spacing of pipe supports are to take into account pipe dimensions, length of the piping, mechanical and physical properties of the pipe material, mass of pipe and contained fluid, external pressure, operating temperature, thermal expansion effects, loads due to external forces, thrust forces, water hammer and vibrations to which the system may be subjected. Combinations of these loads shall be checked.

2.4.4.1(b) Each support is to evenly distribute the load of the pipe and its contents over the full width of the support. Measures shall be taken to minimize wear of the pipes where they contact the supports.

2.4.4.1(c) Heavy components in the piping system such as valves and expansion joints shall be independently supported.

2.4.4.1(d) The supports are to allow for relative movement between the pipes and the vessel's structure, having due regard for the difference in the coefficients of thermal expansion and deformations of the vessel's hull and its structure.

2.4.4.1(e) When calculating the thermal expansion, the system working temperature and the temperature at which assembling is performed shall be taken into account

2.4.4.2 External Loads

When installing the piping, allowance shall be made for temporary point loads, where applicable. Such allowances are to include at least the force exerted by a load (person) of 980 N (100 kgf, 220 lbf) at mid-span on any pipe more than 100 mm (4 in.) nominal diameter.

Pipes shall be protected from mechanical damage where necessary.

2.4.4.3 Plastic Pipe Connections

2.4.4.3(a) The strength of fittings and joints shall not to be less than that of the piping they connect.

2.4.4.3(b) Pipes may be joined using adhesive-bonded, welded, flanged or other joints.

2.4.4.3(c) Tightening of flanged or mechanically coupled joints shall be performed in accordance with manufacturer's instructions.

2.4.4.3(d) Adhesives, when used for joint assembly, shall be suitable for providing a permanent seal between the pipes and fittings throughout the temperature and pressure range of the intended application.

Joining techniques shall be in accordance with manufacturer's installation guidelines. Personnel performing these tasks shall be qualified to the satisfaction of INTLREG, and each bonding procedure shall be qualified before shipboard piping installation commences. Requirements for joint bonding procedures are in accordance with Sect 2 [2.4.6]

2.4.4.4 Electrical Conductivity

Where electrically conductive pipe is required by Chapter 4,Sect 2 [2.4.3.8] , installation of the pipe shall be in accordance with the following:

2.4.4.4(a) The resistance to earth (ground) from any point in the system shall not to exceed 1 meg- ohm. The resistance shall be checked in the presence of the Surveyor.

2.4.4.4(b) Pipes and fittings with conductive layers shall be protected against a possibility of spark damage caused by a different conductivity of the conductive layers.

2.4.4.4(c) Where used, earthing wires or bonding straps shall be accessible for inspection. The Surveyor is to verify that they are in visible locations.

2.4.4.5 Shell Connections

Where plastic pipes are permitted in systems connected to the shell of the vessel, the valves and the pipe connection to the shell shall be metallic. The side shell valves shall be arranged for remote control from outside the space in which the valves are located. For further details of the shell valve installation, their connections and material, refer to Chapter 4, Sect 2 [2.10]

2.4.4.6 Bulkhead and Deck Penetrations

2.4.4.6(a) The integrity of watertight bulkheads and decks shall be maintained where plastic pipes pass through them.

2.4.4.6(b) Where plastic pipes pass through "A" or "B" class divisions, arrangements shall be made to ensure that the fire endurance shall not impaired. These arrangements shall be tested in accordance with IMO Resolution. A 754 (18), Recommendation on Fire Resistance Tests for "A", "B" and "F" Class Divisions, as amended.

2.4.4.6(c) If the bulkhead or deck is also a fire division and destruction by fire of plastic pipes may cause inflow of liquid from a tank, a metallic shut-off valve operable from above the bulkhead deck shall be fitted at the bulkhead or deck.

2.4.4.7 Application of Fire Protection Coatings

Fire protection coatings shall be applied on the joints, where necessary for meeting the required fire endurance criteria in Chapter 4 Sect 2 [2.4.3.6] after performing hydrostatic pressure tests of the piping system Refer Chapter 4 Sect 2 [2.4.10]. The fire protection coatings shall be applied in accordance with the manufacturer's recommendations, using a procedure approved in each particular case.

2.4.5 Manufacturing of Plastic Pipes

In accordance with Part-1, Chapter-1, Sect-11 or ISO 9001 (or equivalent), the manufacturer is required to have a quality system and are to be certified The quality system is to consist of elements necessary to ensure that pipes and components are produced with consistent and uniform mechanical and physical properties in accordance with recognized standards and including testing to demonstrate the compliance of plastic pipes, fittings and joints Chapter 4 Sect 2 [2.4.3.1]through Sect 2 [2.4.3.8] and Sect 2 [2.4.10] , as applicable.

Where the manufacturer does not have a certified quality system in accordance with Part-1, Chapter-1, Sec-11, or ISO 9001 (or equivalent)~~,~~ the tests in Chapter 4,Sect 2 [2.4.3.1] through Sect 2 [2.4.3.8] Sect 3 [3.6] and, as applicable, will be required using samples from each batch of pipes being supplied for use aboard the vessel and shall be carried out in the presence of the Surveyor.

Each length of pipe and each fitting shall be tested at the manufacturer's production facility to a hydrostatic pressure not less than 1.5 times the maximum allowable internal pressure of the pipe in Sect 2 [2.4.3.1]. Alternatively, for pipes and fittings not employing hand layup techniques, the hydrostatic pressure test may be carried out in accordance with the hydrostatic testing requirements stipulated in the recognized national or international standard to which the pipe or fittings are manufactured, provided that there is an effective quality system in place.

Depending upon the intended application, INTLREG reserves the right to require the hydrostatic pressure testing of each pipe and/or fitting.

The production testing is required to be witnessed by the Surveyor if the facility does not have a certified quality system according to Part-1, Chapter-1, Sect-11 or ISO 9001 (or equivalent

The manufacturer is to provide documentation certifying that all piping and piping components supplied are in compliance with the requirements of Section 3 of this chapter

2.4.6 Plastic Pipe Bonding Procedure Qualification

2.4.6.1 Procedure Qualification Requirements

2.4.6.1(a) To qualify joint bonding procedures, the tests and examinations specified herein shall be successfully completed. The procedure for making bonds is to include the following:

i) Materials used

ii) Tools and fixtures

iii) Environmental requirements

iv) Joint preparation requirements

v) Cure temperature

vi) Dimensional requirements and tolerances

vii) Test acceptance criteria for the completed assembly

2.4.6.2(b) Any change in the bonding procedure which will affect the physical and mechanical properties of the joint will require the procedure to be to be qualified again

2.4.6.2 Procedure Qualification Testing

2.4.6.2(a) A test assembly shall be fabricated in accordance with the procedure to be qualified and it is to consist of at least one pipe-to-pipe joint and one pipe-to-fitting joint. When the test assembly has been cured, it shall be subjected to a hydrostatic test pressure at a safety factor of 2.5 times the design pressure of the test assembly for not less than one hour. No leakage or separation of joints shall be allowed. The test shall be conducted so that the joint is loaded in both the longitudinal and circumferential direction.

2.4.6.2(b) Selection of the pipes used for test assembly shall be in accordance with the following:

i) When the largest size to be joined is 200 mm (8 in.) nominal outside diameter or smaller, the test assembly shall be the largest pipe size to be joined.

ii) When the largest size to be joined is greater than 200 mm (8 in.) nominal outside diameter, the size of the test assembly shall be either 200 mm (8 in.) or 25% of the largest piping size to be joined, whichever is greater.

2.4.6.2(c) When conducting performance qualifications, each bonder and each bonding operator are to make up test assemblies, the size and number of which shall be as required above.

2.4.7 Tests by the Manufacturer – Fire Endurance Testing of Plastic Piping in the Dry Condition (For Level 1 and Level 2)

2.4.7.1 Test Method

2.4.7.1(a) The specimen shall be subjected to a furnace test with fast temperature increase similar to that likely to occur in a fully developed liquid hydrocarbon fire. The time/temperature shall be as follows:

at the end of 5 minutes	945°C	(1733°F)
at the end of 10 minutes	1033°C	(1891°F)
at the end of 15 minutes	1071°C	(1960°F)
at the end of 30 minutes	1098°C	(2008°F)
at the end of 60 minutes	1100°C	(2012°F)

2.4.7.1(b) The accuracy of the furnace control shall be as follows:

i) During the first 10 minutes of the test, variation in the area under the curve of mean furnace temperature shall be within ±15% of the area under the standard curve.

ii) During the first 30 minutes of the test, variation in the area under the curve of mean furnace temperature shall be within ±10% of the area under the standard curve.

iii) For any period after the first 30 minutes of the test, variation in the area under the curve of mean furnace temperature shall be within ± 5% of the area under the standard curve.

iv) At any time after the first 10 minutes of the test, the difference in the mean furnace temperature from the standard curve shall be within ±100°C (±180°F).

2.4.7.1(c) The locations where the temperatures are measured, the number of temperature measurements and the measurement techniques shall be approved by INTLREG.

2.4.7.2 Test Specimen

2.4.7.2(a) The test specimen shall be prepared with the joints and fittings intended for use in the proposed application.

2.4.7.2(b) The number of specimens shall be sufficient to test typical joints and fittings including joints between non-metal and metal pipes and metal fittings to be used.

2.4.7.2(c) The ends of the specimen shall be closed. One of the ends is to allow pressurized nitrogen to be connected. The pipe ends and closures may be outside the furnace.

2.4.7.2(d) The general orientation of the specimen shall be horizontal and it shall be supported by one fixed support with the remaining supports allowing free movement. The free length between supports shall not to be less than 8 times the pipe diameter.

2.4.7.2(e) Most materials will require a thermal insulation to pass this test. The test procedure is to include the insulation and its covering.

2.4.7.2(f) If the insulation contains or is liable to absorb moisture, the specimen shall not to be tested until the insulation has reached an air dry-condition, defined as equilibrium with an ambient atmosphere of 50% relative humidity at 20 ± 5°C (68 ± 9°F). Accelerated conditioning is permissible, provided the method does not alter the properties of the component material. Special samples shall be used for moisture content determination and conditioned with the test specimen. These samples shall be so constructed in such a way so that represent the loss of water vapor from the specimen having similar thickness and exposed faces.

2.4.7.3 Test Condition

A nitrogen pressure inside the test specimen shall be maintained automatically at 0.7 ± 0.1 bar (0.7 ± 0.1 kgf/cm^2, 10 ± 1.5 psi) during the test. Means shall be provided to record the pressure inside the pipe and the nitrogen flow into and out of the specimen in order to indicate leakage.

2.4.7.4 Acceptance Criteria

2.4.7.4(a) During the test, no nitrogen leakage from the sample shall occur during the test.

2.4.7.4(b) After termination of the furnace test, the test specimen together with fire protective coating, if any, shall be allowed to cool in still air to ambient temperature and then tested to the maximum allowable pressure of the pipes Chapter 4,Sect 2 [2.4.3.1] and Sect 2 [2.4.3.2] The pressure shall be held for a minimum of 15 minutes. Pipes without leakage qualify as Level 1 or 2 depending on the test duration. Pipes with negligible leakage (i.e., not exceeding 5% flow loss) qualify as Level 1W or Level 2W depending on the test duration. Where practicable, the hydrostatic test shall be conducted on bare pipe (i.e., coverings and insulation removed) so that any leakage will be apparent.

2.4.7.4(c) Alternative test methods and/or test procedures considered to be at least equivalent, including open pit testing method, may be accepted in cases where the pipes are too large for the test furnace.

2.4.8 Test by Manufacturer – Fire Endurance Testing of Water-Filled Plastic Piping (For Level 3)

2.4.8.1 Test Method

2.4.8.1(a) A propane multiple burner test with a fast temperature increase shall be used.

2.4.8.1(b) For piping up to and including 152 mm (6 in.) O.D., the fire source is to consist of two rows of five burners, as shown in Figure 4.2.1. A constant heat flux averaging 113.6 kW/m^2 (36,000 BTU/hr-ft^2) ± 10% shall be maintained 12.5 ± 1 cm (5 ± 0.4 in.) above the centerline of the burner array. This flux corresponds to a pre-mix flame of propane with a fuel flow rate of 5 kg/hr (11 lb/hr) for a total heat release of 65 k ± W (3700 BTU/min.). The gas consumption shall be measured with an accuracy of at least ± 3% in order to maintain a constant heat flux. Propane with a minimum purity of 95% shall be used.

2.4.8.1(c) For piping greater than 152 mm (6 in.) O.D., one additional row of burners shall be included for each 51 mm (2 in.) increase in pipe diameter. A constant heat flux averaging

kW/m^2 (36,000 BTU/hr-ft^2) ± 10% is still to be maintained at the 12.5 ± 1 cm (5 ± 0.4 in.) height above the centerline of the burner array. The fuel flow shall be increased as required to maintain the designated heat flux.

2.4.8.1(d) The burners shall be type “Sievert No. 2942” or equivalent which produces an air mixed flame. The inner diameter of the burner heads shall be 29 mm (1.14 in.).Figure .4.2.1 The burner heads shall be mounted in the same plane and supplied with gas from a manifold. If necessary, each burner shall be equipped with a valve in order to adjust the flame height.

2.4.8.1(e) The height of the burner stand is also to be adjustable. It shall be mounted centrally below the test pipe with the rows of burners parallel to the pipe’s axis. The distance between the burner heads and the pipe shall be maintained at 12.5 ± 1 cm (5 ± 0.4 in.) during the test. The free length of the pipe between its supports shall be 0.8 ± 0.05 m (31.5 ± 2 in.). Refer Figure 4.2.2

FIGURE- 4.2.1

Fire Endurance Test Burner Assembly

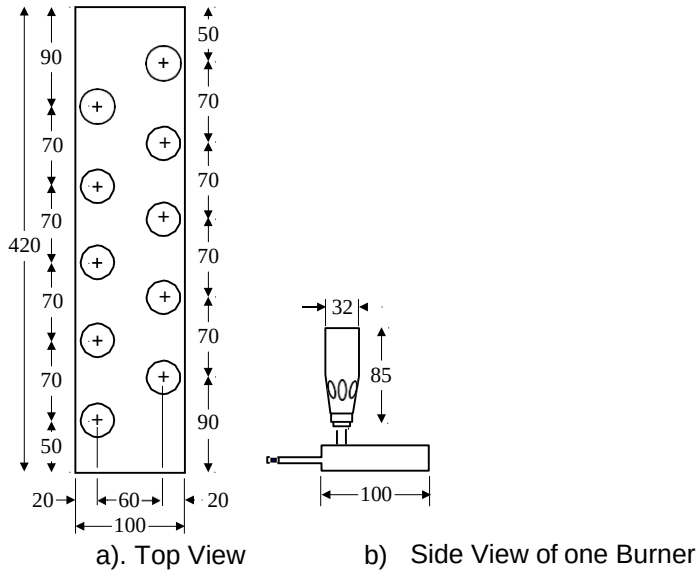

FIGURE 4.2.2

Fire Endurance Test Stand with Mounted Sample

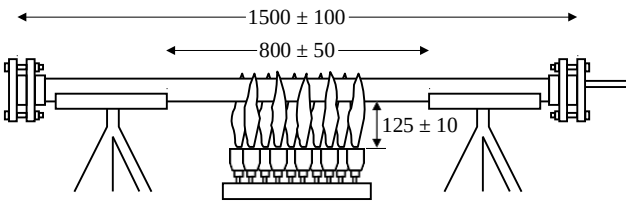

2.4.8.2 Test Specimen

2.4.8.2(a) Each pipe is to have a length of approximately 1.5 m (5 ft).

2.4.8.2(b) The test pipe shall be prepared with permanent joints and fittings intended to be used. Only valves and straight joints versus elbows and bends shall be tested as the adhesive in the joint is the primary point of failure.

2.4.8.2(c) The number of pipe specimens shall be sufficient to test all typical joints and fittings.

2.4.8.2(d) The ends of each pipe specimen shall be closed except to allow pressurized water and air vent to be connected.

2.4.8.2(e) If the insulation contains or is liable to absorb moisture, the specimen shall not to be tested until the insulation has reached an air dry-condition, defined as equilibrium with an ambient atmosphere of 50% relative humidity at 20 ± 5°C (68 ± 9°F). Accelerated conditioning is permissible, provided the method does not alter the properties of the component material. Special samples shall be used for moisture content determination and conditioned with the test specimen. These samples shall be so constructed as to represent the loss of water vapor from the specimen having similar thickness and exposed faces.

2.4.8.2(f) The pipe samples are to rest freely in a horizontal position on two V-shaped supports. The friction between pipe and supports shall be minimized. The supports may consist of two stands, as shown in Figure 4.2.2

2.4.8.2(g) A relief valve shall be connected to one of the end closures of each specimen.

2.4.8.3 Test Conditions

2.4.8.3(a) The test shall be carried out in a sheltered test site in order to prevent any draft influencing the test.

2.4.8.3(b) Each pipe specimen shall be completely filled with deaerated water to exclude air bubbles.

2.4.8.3(c) The water temperature shall not to be less than 15°C (59°F) at the start and shall be measured continuously during the test. The water shall be stagnant and the pressure maintained at 3 ± 0.5 bar (3.1 ± 0.5 kgf/cm^2, 43.5 ± 7.25 psi) during the test.

2.4.8.4 Acceptance Criteria

2.4.8.4(a) During the test, no leakage from the sample(s) is to occur except that slight weeping through the pipe wall may be accepted.

2.4.8.4(b) After termination of the burner test, the test specimen together with fire protective coating, if any, shall be allowed to cool to ambient temperature and then tested to the maximum allowable pressure of the pipes, as defined in Chapter 4,Sections 2 [2.4.3.1]and [2.4.3.2] The pressure shall be held for a minimum of 15 minutes without significant leakage [i.e., not exceeding 0.2 1/min. (0.05 gpm)]. Where practicable, the hydrostatic test shall be conducted on bare pipe (i.e., coverings and insulation removed) so that any leakage will be apparent.

2.4.9 Tests by Manufacturer – Flame Spread

2.4.9.1 Test Method

Flame spread of plastic piping shall be determined by IMO Resolution A.653(16) entitled, “Recommendation on Improved Fire Test Procedures for Surface Flammability of Bulkhead, Ceiling, and Deck Finish Materials” with the following modifications.

2.4.9.1(a) Tests shall be made for each pipe material and size.

2.4.9.1(b) The test sample shall be fabricated by cutting pipes lengthwise into individual sections and then assembling the sections into a test sample as representative as possible of a flat surface. A test sample is to consist of at least two sections. The test sample shall be at least 800 ±5 mm (31.5 ±0.2 in.) long. All cuts shall be made normal to the pipe wall.

2.4.9.1(c) The number of sections that must be assembled together to form a test sample shall be that which corresponds to the nearest integral number of sections which makes up a test sample with an equivalent linearized surface width between 155 mm (6 in.) and 180 mm (7 in.). The surface width is defined as the measured sum of the outer circumference of the assembled pipe sections that are exposed to the flux from the radiant panel.

2.4.9.1(d) The assembled test sample is to have no gaps between individual sections.

2.4.9.1(e) The assembled test sample shall be constructed in such a way that the edges of two adjacent sections coincide with the centerline of the test holder.

2.4.9.1(f) The individual test sections shall be attached to the backing calcium silicate board using wire (No. 18 recommended) inserted at 50 mm (2 in.) intervals through the board and tightened by twisting at the back.

2.4.9.1(g) The individual pipe sections shall be mounted so that the highest point of the exposed surface is in the same plane as the exposed flat surface of a normal surface.

2.4.9.1(h) The space between the concave unexposed surface of the test sample and the surface of the calcium silicate backing board shall be left void.

2.4.9.1(i) The void space between the top of the exposed test surface and the bottom edge of the sample holder frame shall be filled with a high temperature insulating wool if the width of the pipe segments extend under the side edges of the sample holding frame.

2.4.10 Testing By Manufacturer

Testing is to demonstrate the compliance of plastic pipes, fittings and joints for which approval, in accordance with Part 5A Chapter 8 Section 3 , is requested. These tests shall be in compliance with the requirements of relevant standards as per Table 4-2.3 and 4.2.4

2.4.11 Testing Onboard After Installation

Piping systems shall be subjected to a hydrostatic test pressure of not less than 1.5 times the design pressure to the satisfaction of the Surveyor.

For piping required to be electrically conductive, earthing shall be checked and random resistance testing shall be conducted to the satisfaction of the Surveyor.

TABLE 4.2.2

Fire Endurance Requirements Matrix for Plastic Pipes

PIPING SYSTEMS		LOCATION										
		A	B	C	D	E	F	G	H	I	J	K
CARGO (Flammable cargoes with flash point □60°C (140°F)												
1	Cargo lines	NA	NA	L1	NA	NA	0	NA	0 (10)	0	NA	L1 (2)
2	Crude oil washing lines	NA	NA	L1	NA	NA	0	NA	0 (10)	0	NA	L1 (2)
3	Vent lines	NA	NA	NA	NA	NA	0	NA	0 (10)	0	NA	X
INERT GAS												
4	Water seal effluent line	NA	NA	0 (1)	NA	NA	0 (1)	0 (1)	0 (1)	0 (1)	NA	0
5	Scrubber effluent line	0 (1)	0 (1)	NA	NA	NA	NA	NA	NA	0 (1)	NA	0
6	Main line	0	0	L1	NA	NA	NA	NA	NA	0	NA	L1 (6)
7	Distribution lines	NA	NA	L1	NA	NA	0	NA	NA	0	NA	L1 (2)
FLAMMABLE LIQUIDS (flash point > 60°C (140°F)												
8	Cargo lines	X	X	L1	X	X	NA (3)	0	0 (10)	0	NA	L1
9	Fuel oil	X	X	L1	X	X	NA (3)	0	0	0	L1	L1
10	Lubricating oil	X	X	L1	X	X	NA	NA	NA	0	L1	L1
11	Hydraulic oil	X	X	L1	X	X	0	0	0	0	L1	L1
SEA WATER (Refer Note 1)												
12	Bilge main and branches	L1 (7)	L1 (7)	L1	X	X	NA	0	0	0	NA	L1
13	Fire main and water spray	L1	L1	L1	X	NA	NA	NA	0	0	X	L1
14	Foam system	L1W	L1W	L1W	NA	NA	NA	NA	NA	0	L1W	L1W
15	Sprinkler system	L1W	L1W	L3	X	NA	NA	NA	0	0	L3	L3
16	Ballast	L3	L3	L3	L3	X	0 (10)	0	0	0	L2W	L2W
17	Cooling water, essential services	L3	L3	NA	NA	NA	NA	NA	0	0	NA	L2W
18	Tank cleaning services,fixed machines	NA	NA	L3	NA	NA	0	NA	0	0	NA	L3 (2)
19	Non-essential systems	0	0	0	0	0	NA	0	0	0	0	0
FRESH WATER												
20	Cooling water, essential services	L3	L3	NA	NA	NA	NA	0	0	0	L3	L3
21	Condensate return	L3	L3	L3	0	0	NA	NA	NA	0	0	0
22	Non-essential systems	0	0	0	0	0	NA	0	0	0	0	0
SANITARY/DRAINS/SCUPPERS												
23	Deck drains (internal)	L1W (4)	L1W (4)	NA	L1W (4)	0	NA	0	0	0	0	0
24	Sanitary drains (internal)	0	0	NA	0	0	NA	0	0	0	0	0
25	Scuppers and discharges (overboard)	0 (1,8)	0 (1,8)	0 (1,8)	0 (1,8)	0 (1,8)	0	0	0	0	0(1,8)	0
VENTS/SOUNDING												
26	Water tanks/dry spaces	0	0	0	0	0	0 (10)	0	0	0	0	0

27	Oil tanks (flashpoint 60°C (140°F))	X	X	X	X	X	X (3)	0	0 (10)	0	X	X
MISCELLANEOUS												
28	Control air	L1 (5)	L1 (5)	L1 (5)	L1 (5)	L1 (5)	NA	0	0	0	L1 (5)	L1 (5)
29	Service air (non-essential)	0	0	0	0	0	NA	0	0	0	0	0
30	Brine	0	0	NA	0	0	NA	NA	NA	0	0	0
31	Auxiliary low pressure steam (pressure ≤ 7 bar (7 kgf/cm2, 100 psi))	L2W	L2W	0 (9)	0 (9)	0 (9)	0	0	0	0	0 (9)	0 (9)

Locations Abbreviations

A-.Category A machinery

B -Other machinery spaces

C-Cargo pump rooms

D-Ro/Ro cargo holds

E-Other dry cargo holds

F.-Cargo tanks

G Fuel oil tanks

H Ballast water tanks

I Cofferdams, void spaces, pipe tunnels and ducts

J Accommodation, service and control spaces

K Open decks

L1- Fire endurance test in dry conditions, 60 minutes, in accordance with Ch 4, Sect 2 [2.4.7]

L2- Fire endurance test in dry conditions, 30 minutes, in accordance with Ch 4, Sect 2 [2.4.7

L3- Fire endurance test in wet conditions, 30 minutes, in accordance with Ch 4, Sect 2 [2.4.8

0- No fire endurance test required

NA- Not applicable

X- Metallic materials having a melting point greater than 925°C (1700°F)

TABLE 4.2. 2 (continued)

Fire Endurance Requirements Matrix for Plastic Pipes

1 Where non-metallic piping is used, remotely controlled valves shall be provided at the vessel's side. These valves shall be controlled from outside the space.

2 Remote closing valves shall be provided at the cargo tanks.

3 When cargo tanks contain flammable liquids with a flash point greater than 60°C (140°F), "0" may replace "NA" or "X".

For drains serving only the space concerned, "0" may replace "L1W".

4 When controlling functions are not required by statutory requirements, “0” may replace “L1”.

5 For pipe between machinery space and deck water seal, “0” may replace “L1”.

6 For passenger vessels, “X” is to replace “L1”.

7 Scuppers serving open decks in positions 1 and 2, as defined in Regulation 13 of the International Convention on Load Lines, 1966, shall be “X” throughout, unless fitted at the upper end with the means of closing capable of being operated from a position above the freeboard deck in order to prevent down flooding.

8 For essential services such as fuel oil tank heating and ship’s whistle, “X” is to replace “0”.

9 For tankers where compliance with Regulation 19.3.6 of Annex I of MARPOL 73/78 is required, “NA” is to replace “0”.

TABLE 4-2.3

Standards for Plastic Pipes – Typical Requirements for All Systems

	Test	Typical Standard	Notes
1	Internal pressure (1)	Chapter 4 Sect 2 [2.4.3.1] ASTM D 1599, ASTM D 2992 ISO 15493 or equivalent	Top, Middle, Bottom (of each pressure range) Tests shall be carried out on pipe spools made of different pipe sizes, fittings and pipe connections.
2	External pressure (1)	Chapter 4 Sect 2[2.4.3.2] ISO 15493 or equivalent	As above, for straight pipes only.
3	Axial strength (1)	Chapter 4,Sect 2 [2.4.3.3]	As above.
4	Load deformation	ASTM D 2412 or equivalent	Top, Middle, Bottom (of each pressure range)
5	Temperature limitations (1)	Chapter 4,Sect 2 [2.4.3.4] ISO 75 Method A GRP piping system: HDT test on each type of resin acc. to ISO 75 method A. Thermoplastic piping systems: ISO 75 Method AISO 306 Plastics – Thermoplastic materials – Determination of Vicat softening temperature (VST) VICAT test according to ISO 2507 Polyesters with an HDT below 80°C should not be used.	Each type of resin
6	Impact resistance (1)	Chapter 4,Sect 2 [2.4.3.5] ISO 9854: 1994, ISO 9653: 1991 ISO15493 ASTM D 2444, or equivalent	Representative sample of each type of construction

7	Ageing	Manufacturer's standard ISO 9142:1990	Each type of construction
8	Fatigue	Manufacturer's standard or service experience.	Each type of construction
9	Fluid absorption	ISO 8361:1991	
10	Material compatibility (2)	ASTM C581 Manufacturer's standard	

Notes:

1 Where the manufacturer does not have a certified quality system, test to be witnessed by the Surveyor. Refer Chapter 4,Sect 2 [2.4.5]

2 If applicable.

TABLE 4.2.4

Standards for Plastic Pipes – Additional Requirements Depending on Service and/or Location of Piping

	Test	*Typical Standard*	*Notes*
1	Fire endurance (1,2)	Ch 4, Sect 2[2.4.3.6]	Representative samples of each type of construction and type of pipe connection.
2	Flame spread (1,2)	Chapter 4,Sect 2 [2.4.3.7]	Representative samples of each type of construction.
3	Smoke generation (2)	IMO Fire Test Procedures Code	Representative samples of each type of construction.
4	Toxicity (2)	IMO Fire Test Procedures Code	Representative samples of each type of construction.
5	Electrical conductivity (1,2)	Chapter 4,Sect 2[2.4.3.8] ASTM F1173-95 or ASTMD 257, NS 6126/ 11.2 or equivalent	Representative samples of each type of construction

1 Where the manufacturer does not have a certified quality system, test to be witnessed by the Surveyor. Refer Chapter 4,Sect 2[2.4.5]

2 If applicable.

3 Test items 1, 2 and 5 in this Table are optional. However, if not carried out, the range of approved applications for the pipes will be limited accordingly .Refer Table 4.2.2

2.5 Material of Valves and Fittings

2.5.1 General

The physical characteristics of such material shall be in accordance with the applicable requirements of Chapter 3 of the INTLREG *Rules for Materials and Welding (Part 2)* or other such appropriate material specifications as may be approved in connection with a particular design for the stresses and temperatures to which they may be exposed. Manufacturers are to make physical tests of each melt and, upon request, are to submit the results of such tests

to INTLREG.

2.5.2 Forged or Cast Steel

In any system, forged or cast steel may be used in the construction of valves and fittings for all pressures and temperatures. Consideration shall be given to the possibility of graphite formation in the following steels: Carbon steel above 425°C (800°F); carbon-molybdenum steel above 468°C (875°F); chrome-molybdenum steel (with chromium under 0.60%) above 524°C (975°F).

2.5.3 Cast Iron

For temperatures not exceeding 232°C (450°F), cast iron of the physical characteristics specified in Section Part 2-Chapter3-Sect 6 of the INTLREG *Rules for Materials and Welding (Part 2)* may be used in the construction of valves and fittings, except in locations for which it is specifically prohibited elsewhere in the Rules.

2.5.4 Ductile (Nodular) Iron

Nodular-iron applications for valves will be specially considered when the material has an elongation of not less than 12% in 50 mm (2 in.) and where the temperature does not exceed 343°C (650°F). Refer Section Part 2-Chapter3-Sect 5 of the INTLREG *Rules for Materials and Welding (Part 2)*.

2.5.5 Brass and Bronze

Brass or bronze having the physical characteristics as specified in Chapter 3 of the INTLREG *Rules for Materials and Welding (Part 2)* may be used in the construction of valves and fittings intended for temperatures up to 208°C (406°F). For temperatures greater than 208°C (406°F) but not in excess of 288°C (550°F), high- temperature bronze shall be used and the chemical and physical characteristics shall be submitted for approval.

Valves, fittings and flanges of nonferrous material may be attached to nonferrous pipe by an approved soldering method. For pressures up to 6.9 bar (7 kgf/cm^2, 100 psi) and temperatures not exceeding 93°C (200°F), ordinary solder may be used, but for higher pressures and temperatures, the method and the quality of solder to be used will be considered for each case.

2.5.7 Plastic

Rigid plastic compounds for valves and fittings in plastic piping systems will be considered for Group II piping systems. The design pressure and temperature together with the physical characteristics of the material verifying compliance with the requirements Ch 4,Sect 2[2.4] shall be submitted in all cases.

2.6 Valves

2.6.1 General

2.6.1.1 Standard Valves

Valves constructed and tested in accordance with a recognized standard may be used, subject to compliance with Sect 2 [2.6.3] below of this section Refer Part 5A Chapter 8 Sect 2[2.3.9],for valves not complying with a recognized national standard.

2.6.1.2 Non-Standard Valves All other valves not certified by the manufacturer as being in accordance with a recognized standard may be accepted based on evidence verifying their suitability for the intended service. Acceptable evidence includes testing or analysis demonstrating adequacy including both structural and material capability aspects. Drawings of such valves showing details of construction and materials shall

be submitted for review, as well as the basis for valve pressure rating, such as design calculations or appropriate burst test data.

2.6.2 Construction

All valves are to close with a right hand (clockwise) motion of the hand wheel when facing the end of the stem and shall be either of the rising-stem type or fitted with an indicator to show whether the valve is open or closed.

All valves of Group I piping systems having nominal diameters exceeding 50 mm (2 in.) are to have bolted, pressure seal or breech lock bonnets and flanged or welding ends. Welding ends shall be the butt weld type, except that socket weld ends may be used for valves having nominal diameters of 80 mm (3 in.) or less, up to and including 39.2 bar (40.0 kgf/cm^2) pressure rating class (ASME 600 Class), and for valves having nominal diameters of 65 mm (2.5 in.) or less, up to and including 98.1 bar (100 kgf/cm^2) pressure rating class (ASME 1500 Class).

All cast iron valves are to have bolted bonnets or shall be of the union bonnet type. For cast iron valves of the union bonnet type, the bonnet ring shall be of steel, bronze or malleable iron.

Stems, discs or disc faces, seats and other wearing parts of valves shall be of corrosion-resistant materials suitable for the intended service.

Valves shall be designed for the maximum pressure to which they will be subjected. The design pressure shall be at least 3.4 bar (3.5 kgf/cm^2, 50 psi). Valves used in open systems, such as vent and drain lines, (for example, level gauge and drain cocks) may be designed for a pressure below 3.4 bar (3.5 kg/cm^2, 50 psi), subject to the requirements Sect 2 [2.6.1] above of this section. Large fabricated ballast manifolds which connect lines exceeding 200 mm (8 in.) nominal pipe size may be used when the maximum pressure to which they will be subjected does not exceed 1.7 bar (1.75 kgf/cm^2, 25 psi).

All valves for Group I piping systems and valves intended for use in oil lines shall be constructed so that the stem is positively restrained from being screwed out of the body (bonnet). Plug valves, butterfly valves and valves employing resilient material will be subject to special consideration. Valve operating systems for all valves which cannot be manually operated shall be submitted for approval.

2.6.3 Hydrostatic Test and Identification

All valves shall be subjected by the manufacturer to a hydrostatic test at a pressure equal to that stipulated by the American National Standards Institute or other recognized standard. They shall bear the trademark of the manufacturer legibly stamped or cast on the exterior of the valve and the primary pressure rating at which the manufacturer identifies the valve as meeting the requirements of the standards.

2.7 Pipe Fittings

2.7.1 General

All fittings in Group I piping are to have flanged or welded ends in sizes over 89 mm O.D. (3 in. N.P.S.). Screwed fittings may be used in Group I piping systems, provided the temperature does not exceed 496°C (925°F) and the pressure does not exceed the maximum pressure indicated below for the pipe size.

Pipe Size mm O.D. (in. N.P.S.)	Maximum Pressure bar (kgf/cm2, psi)
above 89 (3)	not permitted in Group I piping service
above 60 (2) through 89 (3)	27.6 (28.10, 400)
above 33 (1) through 60 (2)	41.4 (42.20, 600)
above 27 (0.75) through 33 (1)	82.8 (84.40, 1200)
27 (0.75) and smaller	103 (105.50, 1500)

Flared, flareless and compression fittings may be used for tube sizes not exceeding 60 mm O.D. (2 in. NPS) in Group I piping. In Group II piping, screwed fittings, flared, flareless and compression tube fittings will be accepted without size limitations. Flared fittings shall be used for flammable fluid systems, except that both flared and flareless fittings of the non-bite type may be used when the tubing system is of steel or nickel-copper or copper-nickel alloys. Only flared fittings shall be used when tubing for flammable fluid systems is of copper or copper-zinc alloys. Refer Chapter 4,Sect [6/1.4] for hydraulic systems.

2.7.2 Hydrostatic Test and Identification

All fittings shall be subjected by the manufacturer to a hydrostatic test at a pressure equal to that stipulated by the American National Standards Institute or other recognized standard. They shall bear the trademark of the manufacturer legibly stamped or cast on the exterior of the fitting and also the primary pressure rating at which the manufacturer guarantees the fitting to meet the requirements of the standards.

2.7.3 Nonstandard Fittings

Fittings which are not certified by the manufacturer as being in accordance with a recognized standard may be accepted based on evidence verifying their suitability for the intended service. Acceptable evidence includes testing or analysis demonstrating adequacy including both structural and material capability aspects. Drawings of such fittings showing details of construction, material and design calculations or test results shall be submitted for review.

2.7.4 Mechanical Joints

The installation of mechanical pipe joints, as covered by Sections [2.7.1] and [2.7.3] above shall be in accordance with the manufacturer's assembly instructions. Where special tools and gauges are required for installation of the joints, these shall be specified and supplied as necessary by the manufacturer. These special tools shall be kept onboard.

2.8 Welded Nonstandard Valves and Fittings

Non-Standard steel valves and fittings fabricated by means of fusion welding are to also comply with the requirements of Chapter 4 of the INTLREG *Rules for Materials and Welding (Part 2)*. However, after a manufacturer's procedure in the fabrication of equipment of this kind has been demonstrated by tests to the satisfaction of an INTLREG Surveyor, subsequent tests on the product need not be witnessed, but the manufacturer's guarantee that the Rules are complied with will be accepted as to other valves and fittings which conform to standards of the American National Standards Institute or other recognized standards.

2.9 Flanges

2.9.1 General

Flanges shall be designed and fabricated in accordance with a recognized standard. Slip-on flanges from flat plate may be substituted for hubbed slip-on flanges in Group II piping systems.

2.9.2 Group I Piping Flanges

In Group I piping, flanges may be attached to the pipes by any of the following methods appropriate for the material involved:

2.9.2.1 Steel Pipe

Over 60 mm O.D. (2 in. NPS) steel pipes shall be expanded into steel flanges, or they may be screwed into the flanges and seal-welded. They may in all cases be attached by fusion welding in compliance with the requirements of Part 2-Chapter 2-Sect 17[17.18] Smaller pipes may be screwed without seal-welding, but oil lines are, in addition, to be expanded into the flanges in order to insure uniformly tight threads.

2.9.2.2 Nonferrous Pipe

In Group I, nonferrous pipes shall be brazed to composition metallic or steel flanges, and in sizes of 60 mm O.D. (2 in. NPS) and under, they may be screwed.

2.9.3 Group II Piping Flanges

Similar attachments are also to be used in Group II piping. However, modifications are permitted for welded flanges, as noted in Part 2-Chapter2-Sect 17 [17.18.2], and screwed flanges of suitable material may be used in all sizes.

2.9.4 Group II Plastic Piping Flanges

Rigid plastic compounds for flanges in plastic piping systems will be considered for Group II piping systems. The design pressure and temperature together with the physical characteristics of the material shall be submitted in all cases.

2.10 Sea Inlets and Overboard Discharges

2.10.1 Installation

Piping connections bolted to the shell plating are to have the bolt heads countersunk on the outside and the bolts threaded through the plating. Where a reinforcing ring of sufficient thickness is welded to the inside of the shell, studs may be used. For compensation in way of holes in the shell plating, Refer Part 5 A-Chapter 8-Sect 2[2.5.8]

Threaded connections outboard of the shell valves are not considered an acceptable method of connection pipe to the shell.

2.10.2 Valve Connections to Shell

Wafer type valves are not to be used for any connections to the vessel’s shell unless specially approved. Lug type butterfly valves used as shell valves are to have a separate set of bolts on each end of the valve so that the inboard end may be disconnected with the valve closed to maintain its watertight integrity.

Where a distance piece is fitted between the shell and the shell valves, the pipe shall be as short as possible and of wall thickness not less than that specified in Ch 4,Sect [2.12.2.5] a)

2.10.3 Materials

All shell fittings and valves required by Chapter 4,Sect 2[2.11] and [2.12] shall be of steel, bronze or other approved ductile material. Valves of ordinary cast iron or similar material are not acceptable. The use of nodular iron, also known as ductile iron or spheroidal-graphite

iron, will be accepted, provided the material has an elongation of not less than 12% in 50 mm (2 in.). All pipes to which this subsection refers shall be of steel or other equivalent material, subject to special approval.

2.10.4 Shell Reinforcement

Overboard discharges are to have spigots extending through the shell plate and doubling plate, where fitted, but need not project beyond the outside surface of the vessel.

2.10.5 Common Overboard Discharge

In general, various types of systems which discharge overboard are not to be interconnected without special approval; that is, closed pumping systems, deck scuppers, gravity drains, etc. are not to have a common overboard discharge.

2.11 Machinery and Pumping Systems

2.11.1 Valves Required

Positive closing valves shall be fitted at the shell in inlet and discharge piping. The controls shall be readily accessible and shall be provided with indicators showing whether the valves are open or closed. In order to be considered readily accessible, the controls, during normal operating conditions, shall be:

Located in a space normally entered without using tools,

i) Clear of or protected from obstructions, moving equipment and hot surfaces that prevent operation or servicing, and

ii) Within operator's reach.

Materials readily rendered ineffective by heat are not to be used for connection to the shell where the failure of the material in the event of a fire would give rise to danger of flooding.

2.11.2 Sea Chests

The locations of sea chests shall be such as to minimize the probability of blanking off the suction and arranged so that the valves may be operated from the floors or gratings. Power-operated sea valves shall be arranged for manual operation in the event of a failure of the power supply.

2.11.2.1 Strainer Plates

Sea chests shall be fitted with strainer plates at the vessel's side. The strainers are to have a clear area of at least 1.5 times the area of the sea valves. Means are provided for clearing the strainer plates, such as by using compressed air or low pressure steam;

2.11.2.2 Ice Strengthening

For vessels with ice strengthening, Refer Part 7B, Chapter 1 of the *INTLREG Rules for Building and Classing Steel Vessels*.

2.12 Scuppers and Drains

2.12.1 General

2.12.1.1 Application

These requirements apply to gravity drain systems from watertight and non-watertight spaces located either above or below the freeboard deck.

2.12.1.2 Definitions

2.12.1.2(a) Gravity drain system. A gravity drain system is a piping system in which flow is accomplished solely by the difference between the height of the inlet end and the outlet end. For the purposes of the Rules, gravity drain systems include those which discharge both inside and outside the vessel.

2.12.1.2(b) Gravity discharge. A gravity discharge is an overboard drain from a watertight space such as spaces below freeboard deck or within enclosed superstructures or deckhouses. Back- flooding through a gravity discharge would affect the reserve buoyancy of the vessel.

2.12.1.2(c) Inboard end. The inboard end of an overboard gravity discharge pipe is that part of the pipe at which the discharge originates. The inboard end to be considered for these requirements is the lowest inboard end where water would enter the vessel if back-flooding would occur.

2.12.1.2(d) Scupper. A scupper is an overboard drain from a non-watertight space or deck area. Back-flooding through a scupper would not affect the reserve buoyancy of the vessel.

2.12.1.3 Basic Principles

Enclosed watertight spaces (spaces below freeboard deck or within enclosed superstructures or deckhouses) shall be provided with means of draining. This may be accomplished by connection to the bilge system or by gravity drains. In general, a gravity drain is permitted wherever the position of the space allows liquid to be discharged by gravity through a suitable opening in the boundary of the space. Unless specifically stated Refer Chapter 4,Sect 2 [2.12.3.1]b) or the following paragraph), the discharge can be directed overboard or inboard. Where directed overboard, means shall be provided to prevent entry of sea water through the opening as per Sect 2 [2.12.2] below of this section. Appropriate arrangements are required to be facilitated to collect and dispose of the drainage, where directed inboard

Non-watertight spaces (open superstructures or deckhouses) and open decks, where liquid can collect are also to be provided with means of draining. In general, a gravity drain is permitted for all non-watertight spaces. All such drains shall be directed overboard.

Gravity drains shall be capable of draining the space when the vessel is on even keel and either upright or listed 5 degrees on either side.

In addition to the requisites identified below, for liquid gas carriers Refer,Part 7B Ch-3; for chemical carriers Refer Part 7B, Chapter-2 and for passenger ships Refer , Part 7B, Chapter-5, Sect-2.

2.12.2 Protection from Sea Water Entry

2.12.2.1 Overboard Gravity Discharges – Normally Open

2.12.2.1(a) General. Discharges led through the shell, either from spaces below the freeboard deck or from within superstructures and deckhouses on the freeboard deck fitted with doors , shall be fitted with efficient and accessible means for preventing water from passing inboard.

Normally, each separate discharge is to be fitted with one automatic non-return valve with a positive means of closing it from a position above the freeboard deck, except as below. Alternatively, one automatic non- return valve and one positive closing valve

controlled from above the freeboard deck may be accepted.

Where the vertical distance from the summer load line to the inboard end of the discharge pipe exceeds 0.01*L,* the discharge may have two automatic non-return valves without positive means of closing, provided that the inboard valve is always accessible for examination under service conditions. The inboard valve shall be above the tropical load waterline. If this shall not practicable, then, provided a locally controlled stop valve is interposed between the two non-return valves, the inboard valve need not be fitted above the tropical load waterline.(LWL)

Where the vertical distance from the summer load waterline to the inboard end of the discharge pipe exceeds 0.02*L,* a single automatic non-return valve without positive means of closing may be accepted, provided it is located above the tropical load waterline (or, where assigned, timber tropical load waterline). If this is impracticable, a locally operated positive closing valve may be provided below the single non-return valve, in which case, the non-return valve need not be located above the specified tropical load waterline.

The means for operating the positive-action valve shall be readily accessible and provided with an indicator showing whether the valve is open or closed. Refer Figure.4.2.3

2.12.2.1(b) Manned Machinery Space. Where sanitary discharges and scuppers lead overboard through the shell in way of manned machinery spaces, the fitting to the shell of a locally operated positive closing valve, together with a non-return valve inboard, will be acceptable.

Refer Figure 4.2.3 for the acceptable arrangements of scuppers, inlets and discharges.

FIGURE 4.2.3

Overboard Discharges – Valve Requirements

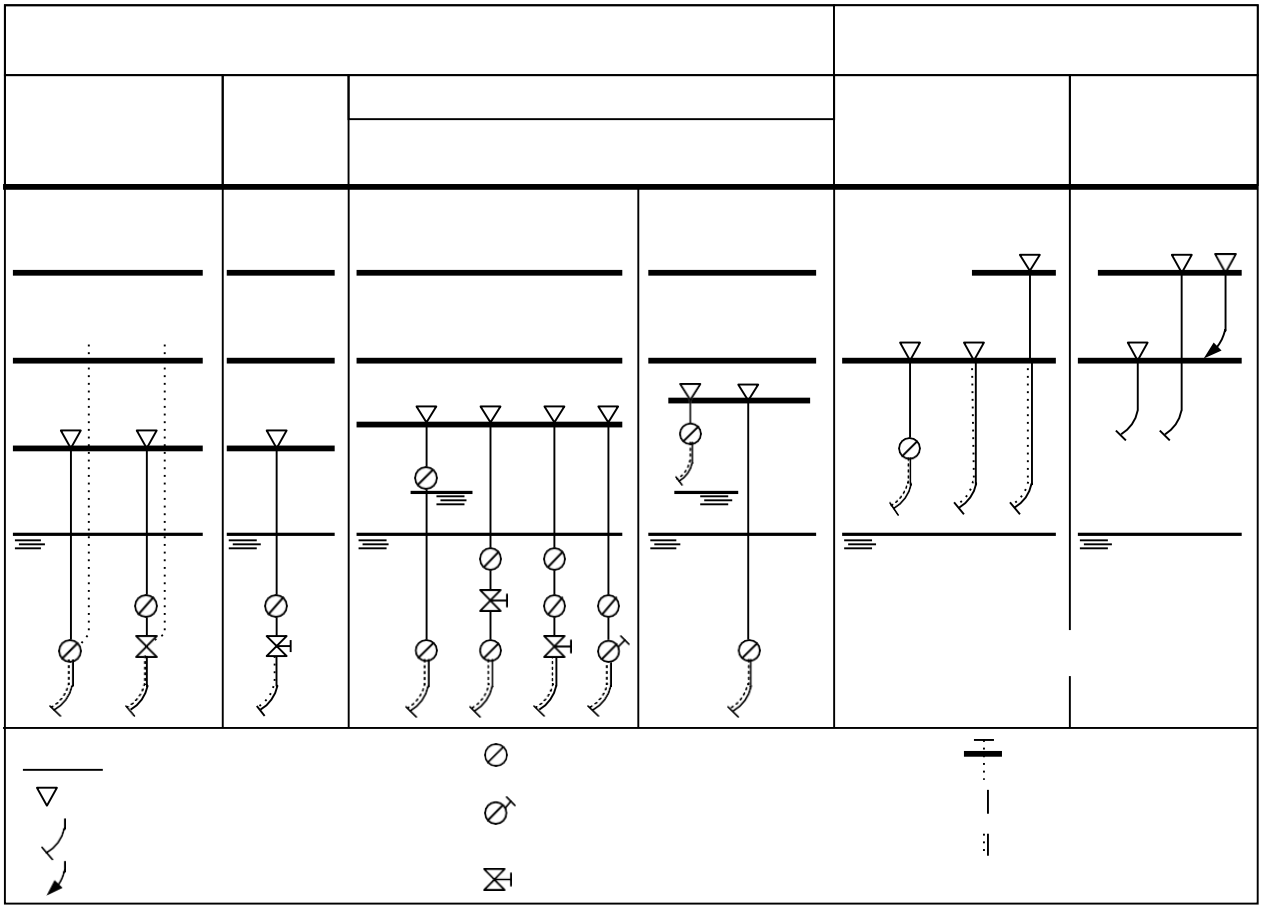

2.12.2.2 Overboard Gravity Discharges – Normally Closed

For overboard discharges which are closed at sea, such as gravity drains from topside ballast tanks, a single screw down valve operated from above the freeboard deck is acceptable.

2.12.2.3 Overboard Gravity Discharges from Spaces below the Freeboard Deck on Vessels Subject to SOLAS Requirements

For vessels subject to SOLAS requirements, instead of the requirements identified in Sect 2 [2.12.2.1] above, each separate gravity discharge led through the shell plating from spaces below the freeboard deck shall be provided with either one automatic non–return valve fitted with a positive means of closing it from above the freeboard deck or with two automatic non–return valves without positive means of closing, provided that the inboard valve is situated above the deepest subdivision load line (DSLL) and is always accessible for examination under service conditions. Where a valve with positive means of closing is fitted, the operating position above the freeboard deck shall always be readily accessible and means shall be provided for indicating whether the valve is open or closed.

FIGURE 4.2.4

SOLAS Vessels – Overboard Discharges from Spaces below Freeboard Deck – Valve Requirements

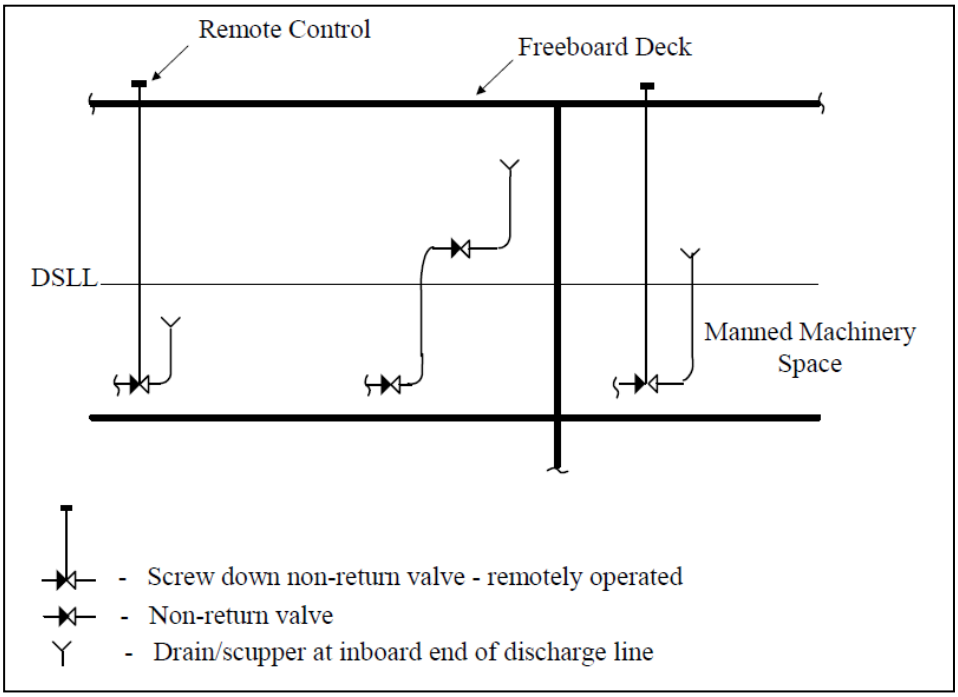

2.12.2.4 Scuppers and Discharges below the Freeboard Deck – Shell Penetration

Scuppers and discharge pipes originating at any level and penetrating the shell either more than 450 mm (17.5 in.) below the freeboard deck or less than 600 mm (23.5 in.) above the summer load waterline shall be provided with a non-return valve at the shell. This valve, unless required above, may be omitted if the length of piping up to the freeboard deck has a wall thickness at least equal to the thickness of the shell plating or extra-heavy pipe, whichever is less.

2.12.2.5 Required Minimum Wall Thicknesses for Pipes

For pipes in the gravity drain systems covered by Sect 2 [2.12.2] above of this section, the wall thickness of steel piping are not be less than given below:

2.12.2.5(a) Piping where substantial thickness is required. For scupper and discharge pipes between hull plating and the closeable or non-return valve, where substantial thickness is required:

i) External diameter of pipes equal to or less than 80 mm (3.15 in.): thickness not less than 7.0 mm (0.276 in.)

ii) External diameter of pipes 180 mm (7.1 in.): thickness not less than 10.0 mm (0.394 in.)

iii) External diameter of pipes equal to or more than 220 mm (8.7 in.): thickness not less than 12.5 mm (0.5 in.) Using linear interpolation Intermediate sizes shall be determined.

2.12.2.5(b) Piping where substantial thickness shall not required. For scupper and discharge pipes inboard of a closeable or non-return valve, where substantial thickness shall not required:

i) External diameter of pipes equal to or less than 155 mm (6.1 in.): thickness not less than 4.5 mm (0.177 in.)

ii) External diameter of pipes equal to or more than 230 mm (9.1 in.): thickness not less than 6.0 mm (0.236 in.) Using linear interpolation Intermediate sizes shall be determined

2.12.3 Gravity Drains from Superstructures or Deckhouses

2.12.3.1 Enclosed Cargo Spaces

Drainage of enclosed cargo spaces situated on the bulkhead deck or the freeboard deck shall be provided with the following:

2.12.3.1(a) Where the summer freeboard is such that the deck edge of the space being drained is not immersed when the vessel heels five degrees, the drainage shall be by means of a sufficient number of gravity drains of suitable size discharging directly overboard.These drains are to be fitted with protection

2.12.3.1(b) Where the summer freeboard is such that the deck edge of the space being drained is immersed when the vessel heels five degrees, the drainage of the enclosed cargo spaces shall be led to a suitable space, or spaces, of adequate capacity, having a high water level alarm and provided with suitable arrangements for discharge overboard. In addition, the system shall be designed such that:

i) The number, size and disposition of the drain pipes are to prevent unreasonable accumulation of free water;

ii) The pumping arrangements are to take into account the requirements for any fixed, pressurized, water spraying, fire extinguishing system;

iii) Water contaminated with substances having flash point of 60°C (140°F) or below shall not be drained to machinery spaces or other spaces where sources of ignition may be present; and Where the enclosed cargo space is protected by a fixed gas fire extinguishing system, the drain pipes are fitted with means to prevent the escape of the smothering gas. The U-tube water seal arrangement should not be used due to possible evaporation of water and the trouble in assuring its effectiveness.

2.12.3.2 Open Superstructures and Deckhouses

Scuppers leading from superstructures or deckhouses not fitted with doors complying with the requirements of Part 5A Chapter 9 sect 2[2.2.4] shall be led overboard.

2.12.4 Vessels Receiving Subdivision Loadlines

For vessels receiving subdivision loadlines, the bulkhead deck is to apply to provisions given in Part 5A Chapter 9 sect 2[2.2] of this section when it is higher than the freeboard deck.

2.13 Cooler Installations External to the Hull

2.13.1 General

The inlet and discharge connections of external cooler installations shall be in accordance with Chapter 4,Sections 2 [2.10.1],[2.10.3 and [2.11.1] except that wafer type valves will be acceptable.

2.13.2 Integral Keel Cooler Installations

The positive closing valves required by Sect 2 [2.13.1] above need not be provided if the keel (skin) cooler installation is integral with the hull. To be considered integral with the hull, the installation shall be constructed such that channels are welded to the hull with the hull structure forming part of the channel, the channel material shall be at least the same thickness and quality as that required for the hull and the forward end of the cooler shall be faired to the hull with a slope of not greater than 4 to 1.

If positive closing valves are not required at the shell, all flexible hoses or joints shall be positioned above the deepest load waterline or be provided with an isolation valve.

2.13.3 Non-integral Keel Cooler Installations

Where non-integral keel coolers are used, if the shell penetrations are not fully welded, the penetration shall be encased in a watertight enclosure.

Non-integral keel coolers shall be suitably protected against damage from debris and grounding by recessing the unit into the hull or by the placement of protective guards

SECTION 3 BILGE AND BALLAST SYSTEMS AND TANKS

Contents

3.1 General Arrangement of Bilge Systems

A pumping system shall be provided in all vessels capable of pumping from and draining any compartment when the vessel is on an even keel and either upright or listed five degrees. For this purpose, wing suctions will often be necessary, except in narrow compartments at the ends of the vessel. Arrangements shall be made whereby water in the compartment will drain to the suction pipes. Efficient means shall be provided for draining water from all tank tops and other watertight flats. Peak tanks and comparatively small compartments, such as chain lockers, echo sounder spaces, and decks over peak tanks, etc., may be drained by ejectors or hand pumps. Where ejectors are used for this purpose, the overboard discharge arrangements are to comply with Chapter 4, Sect 2 [2.12]

3.2 Bilge and Ballast Pumps

3.2.1 Number of Bilge Pumps

All self-propelled vessels 20 m (65 ft) in length or greater shall be provided with two power driven bilge pumps, one of which may be attached to the propulsion unit. Vessels under 20 m (65 ft) in length shall be provided with one fixed power driven pump, which may be an attached unit, and one portable hand pump.

3.2.2 Bilge Pump Capacity

The capacity of each pump shall be in accordance with the following:

Vessel Length	*Minimum Capacity per Pump*
Below 20 m (65 ft)	5.5 m^3/hr (25 gpm) (hand pump 5 gpm, 1.13 m^3/hr)
20 m (65 ft) or greater but below 30.5 m (100 ft)	11.36 m^3/hr (50 gpm)
30.5 m (100 ft) or greater but below 45.7 m (150 ft)	14.33 m^3/hr (66.6 gpm)
45.7 m (150 ft) and greater	$Q = 5.66d^2/10^3$ m^3/hr $Q = 16.1d^2$ gpm

Q =pump capacity

d =required diameter of main bilge line suction, mm (in.), as defined in Sect 3 [3.3.5] below of this

section

When more than two pumps are connected to the bilge system, their arrangement and aggregate capacity are not to be less effective.

3.2.3 Independent Power Bilge Pumps

Sanitary, ballast and general service pumps may be accepted as independent power bilge pumps, provided they are of the required capacity and are fitted with the necessary control valves for pumping bilges.

3.2.4 Number of Ballast Pumps

All self-propelled vessels 20 m (65 ft) in length or greater shall be provided with at least two power driven ballast pumps, one of which may be driven by the propulsion unit. Sanitary, bilge and general service pumps may be accepted as independent power ballast pumps.

Alternative means of deballasting, such as an educator or a suitable liquid cargo pump with an appropriate temporary connection to the ballast system, may be accepted in lieu of a second ballast pump.

3.2.5 Centrifugal Pumps

Where centrifugal pumps are installed, suitable means for priming shall be provided.

3.3 Bilge and Ballast Piping

3.3.1 General

The arrangement of the bilge and ballast pumping systems shall be such as to prevent the possibility of water or oil passing into the cargo and machinery spaces, or from one compartment to another, whether from the sea, water ballast or oil tanks. The bilge and ballast mains are to have separate control valves at the pumps.

3.3.2 Installation

Bilge or ballast pipes, where permitted to pass through compartments intended for the carriage of oil, shall be of either steel or wrought iron.

Where bilge pipes in way of deep tanks are not led through a watertight or oil-tight tunnel, the bilge lines shall be of steel and extra heavy. Similarly, where ballast pipes in way of deep tanks other than ballast tanks are not led through a watertight or oil-tight tunnel, the ballast lines shall be of steel and extra heavy. For both bilge and ballast piping, the number of joints shall be kept to a minimum and to be arc welded or extra heavy flanged. The piping within a deep tank shall be installed to take care of expansion. A non- return valve shall be fitted at the open end of bilge pipes.

3.3.3 Manifolds, Cocks and Valves

3.3.3.1 General

All manifolds, cocks and valves in connection with the bilge pumping arrangement shall be in positions which are accessible at all times under ordinary circumstances. All valves in the machinery space controlling the bilge suctions from the various compartments shall be of the stop-check type. If valves are fitted at the open ends of pipes, they shall be of the non-return type.

3.3.3.2 Common-main-type Bilge Systems

A common-main bilge system normally consists of one or more main lines installed along the length of the vessel fitted with branch bilge suction connections to various compartments. Where only one fore-and-aft bilge main is installed, the bilge main shall be located inboard of 20% of the molded beam of the vessel, measured inboard from the side of the ship perpendicular to the centerline at the level of the summer load line. If there is at least one bilge main on each side of the vessel, then those bilge mains may be installed within 20% of the molded beam, measured inboard from the side of the ship perpendicular to the centerline at the level of the summer load line, provided they are fitted with branch lines and control valves arranged such that it is possible to effectively pump out each compartment using the main(s) on either side of the vessel.

For all common-main-type bilge systems, the control valves required in the branches from the bilge main shall be accessible at all times and shall be of the stop-check type with an approved type of remote operator. Remote operators may be located in a manned machinery space, or from an accessible position above the freeboard deck or from underdeck walkways. Remote operators may be of the hydraulic, pneumatic,

electric or reach-rod type.

3.3.3.3 Controls for Ballast Tank Valves

Ballast tank valves shall be arranged so they will remain closed at all times, except when ballasting. For this purpose, manual screw thread operated valves, positive holding arrangements for butterfly type valves or other equivalent arrangements may be used. Where installed, remote controlled valves shall be arranged so they will close and remain closed upon loss of control power, or will remain in their last position and are provided with a readily accessible manual means of operation in case of loss of power to the valve control system. Remote control of bilge and ballast valves shall be clearly marked at the control station and means shall be provided to indicate whether the valve is open or closed.

3.3.4 Strainers

Bilge lines in machinery spaces other than emergency suctions shall be fitted with strainers easily accessible from the floor plates and are required to have straight tail pipes to the bilges. The ends of bilge lines in other compartments shall be fitted with suitable strainers having an open area of not less than three times the area of the suction pipe.

3.3.5 Size of Bilge Suctions

The least internal diameter of bilge suction pipes shall be that of the nearest commercial size within 6 mm (0.25 in.) of the diameter determined by the following equations:

3.3.5.1 Main Line

For the diameter of main bilge line suctions and direct bilge suctions to the pumps:

$$d = 25 + 1.68\sqrt{L\,(B + D)} \text{ mm}$$

$$d = 1 + \sqrt{\frac{L\,(B + D)}{2500}} \text{ in.}$$

Where

d = internal diameter of the bilge main pipe; mm (in.)

L = scantling length of vessel,

B = breadth of vessel

D = depth to bulkhead or freeboard deck,

However, no bilge main suction pipe is to be less than 63 mm (2.5 in.) internal diameter.

3.3.5.2 Branch Lines

For the equivalent diameter of the combined branch suctions to a compartment:

$$d_b = 25 + 2.16\sqrt{c\,(B + D)} \text{ mm}$$

$$d_b = 1 + \sqrt{\frac{c\,(B + D)}{1500}} \text{ in.}$$

Where

d_b = internal diameter of the bilge branch pipe; mm (in.)

c = length of the compartment; m (ft)

3.3.5.3 Main Line Reduction

Where engine room bilge pumps are fitted primarily for drainage within the engine room, *L* may be reduced by the combined length of the cargo tanks or cargo holds. In such cases, the cross sectional area of the bilge main shall not to be less than twice the required cross sectional area of the engine room branch lines.

3.3.5.4 Alternate Size Requirements

For vessels below 30.5 m (100 ft) in length, the bilge pipe sizes may be in accordance with the following

Vessel Length	Minimum Pipe Size (I.D.)
Below 20 m (65 ft)	25 mm (1 in.)
20 m (65 ft) or greater but below 30.5 m (100 ft)	38 mm (1.5 in.)

3.3.5.5 Size Limits

For vessels of 30.5 m (100 ft) in length or greater, no main suction piping shall be less than 63 mm (2.5 in.) internal diameter. No branch piping need be more than 100 mm (4 in.) I.D., nor is it to be less than 50 mm (2 in.) I.D., except that for drainage of small pockets or spaces 38 mm (1.5 in.)
I.D. pipe may be used.

3.3.5.6 Bilge Common-main

The diameter of each common-main bilge line may be determined by the equation for bilge branches given in Sect 3 [3.3.5.2] using the combined compartment length upstream of the point where the diameter is being determined. In case of double hull construction with full depth wing tanks served by a ballast system, where the beam of the vessel shall not representative of the breadth of the compartment, *B* may be appropriately modified to the breath of the compartment. However, no common-main bilge pipe needs to be more than the diameter for the bilge main given in Sect 3 [3.3.5.1]

3.3.6 Gravity Drains

Gravity drains that penetrate the main machinery space watertight bulkheads below the freeboard deck and terminate within the main machinery space shall be fitted with a valve operable from above the freeboard deck or with quick-acting, self-closing valves. The valve should preferably be located in the main machinery space. When gravity drains from other spaces are terminated in cargo holds, the cargo hold bilge well shall be fitted with a high level alarm. Gravity drains which terminate in spaces which are protected by fixed gas extinguishing systems shall be fitted with means to prevent the escape of extinguishing medium.

3.3.7 Ballast Water Treatment Systems

Where a ballast water treatment system shall be installed, it is to comply with the requirements in of the INTLREG *Guide for Ballast Water Treatment* and the same shall be verified by INTLREG.

3.3.8 Oil Pollution Prevention Measures

3.3.8.1 General

Means shall be provided to process oil contaminated water from machinery space

bilges before discharging it overboard for every vessel of 400 gross tonnage and above. In general, the discharge criteria of MARPOL ANNEX 1, Regulation 15 shall be complied with.

3.3.8.2 Oily Water Filtering or Separating Equipment

Oily water filtering equipment capable of processing oily mixtures to produce an effluent with oil content not exceeding 15 parts per millions (PPM) and complying with IMO Resolution MEPC.107(49) shall be provided to allow oily water from the bilges to be processed prior to discharging overboard. For vessels of 10,000 tons gross tonnage and above, the equipment shall be fitted with an alarm and an arrangement to automatically stop the discharge when 15 PPM cannot be maintained.

3.3.8.3 Sludge Tank

A tank or tanks of adequate capacity , meeting MEPC.1/Circ.51 shall be provided to receive oily residues such as those resulting from the oily water filtering or separating equipment and from the purification of fuel and lubricating oils. The minimum sludge tank capacity V_1 shall be calculated by the following formula:

$V_1 = K_1 CD$ m^3 (ft^3)

where

K_1 = 0.015 for vessels where heavy fuel oil is purified for main engine use or

= 0.005 for vessels using diesel oil or heavy fuel oil which does not require purification before use

C = daily fuel oil consumption, m^3 (ft^3)

D = maximum period of voyage between ports where sludge can be discharged ashore (days). If accurate data is not available , a figure of 30 days shall be used.

The sludge tank shall be so designed as to facilitate cleaning. Where heavy fuel oil residue is expected to be received by the sludge tank, heating arrangements shall be provided to facilitate the discharge of the sludge tank. For vessels fitted with incinerators or similar equipment for onboard disposal of sludge, the minimum sludge tank capacity may be reduced to 50% of V_1 or 2 m^3 (72 ft^3) [1 m^3 (36 ft^3) for vessels below 4,000 gross tonnage], whichever is greater.

3.3.8.4 Sludge Piping System

(a) Sludge Pump. The sludge tank shall be provided with a designated pump of a suitable type, capacity and discharge head for the discharge of the tank content to shore reception facilities.

(b) Standard Discharge Connection. To enable the discharge of sludge to shore reception facilities, the sludge piping shall be provided with a standard discharge connection, in accordance with Table 4.3.1

TABLE 4.3.1

Dimensions and Details of Standard Discharge Connection Flange

	Dimension
Outside diameter	215 mm
Inner diameter	According to pipe outside diameter
Bolt circle diameter	183 mm
Slots in flange	6 holes 22 mm in diameter equidistantly placed on a bolt circle of the above diameter, slotted to the flange periphery. The slot width to be 22 mm
Flange thickness	20 mm
Bolts and nuts:	6 sets, each of 20 mm in diameter and of suitable length
The flange is designed to accept pipes up to a maximum internal diameter of 125 mm and shall be of steel or other equivalent material having a flat face. This flange, together with a gasket of oil-proof material, is to be suitable for a service pressure of 6 kg/cm2	

(c) Sludge Piping. There shall be no interconnection between the sludge tank discharge piping and bilge piping other than the possible common piping, with appropriate valves, leading to the standard discharge connection. Piping to and from sludge tanks is to have no direct connection overboard other than the standard discharge connection referred to in Sect 3[3.3.8.4] (b) above

3.4 Direct and Emergency Bilge Suctions for Main Machinery Space

3.4.1 Direct Bilge Suction

For vessels 20 m (65 ft) in length and greater, one of the independently driven bilge pumps .Refer Chapter 4 Sect 3[3.2.1] shall be fitted with a suction led directly from the main machinery space bilge to the suction valve chest of the pump and arranged so that it can be operated independently of the bilge system. The size of this line shall be such that the pump will deliver its full capacity. The direct bilge suction shall be controlled by a stop- check valve.

If watertight bulkheads separate the main machinery space into compartments, a direct suction shall be fitted to each compartment unless the pumps available for bilge service are distributed throughout these compartments. At least one pump in each such compartment shall be fitted with a direct suction for its compartment.

3.4.2 Emergency Bilge Suctions

In addition to the direct bilge suction in above Sect 3 [3.4.1] an emergency bilge suction shall be fitted for the main machinery spaces on all oceangoing vessels 55 m (180 ft) in length and over. The emergency bilge suction shall be directly connected to the largest independently driven pump in the propulsion machinery space, other than the required bilge pumps. Where this pump shall not suitable, the second largest suitable pump in the main machinery space may be used for this service, provided that the selected pump shall not one of the required bilge pumps and its capacity shall not less than that of the required bilge pump.

The area of the emergency bilge suction pipe shall be equal to the full suction inlet of the pump selected. The emergency bilge line shall be provided with a suction stop-check valve, which shall be so located as to enable rapid operation, and a suitable overboard discharge line. For

the emergency bilge inlet, the distance between the open end of the suction inlet and the tank top shall be adequate to allow a full flow of water. The hand wheel of emergency bilge suction valve shall be position not less than 460 mm (18 in.) above the floor plates.

3.5 Vent Pipes

3.5.1 General

Except for comparatively small compartments that are not fitted with a fixed means of drainage, vent pipes shall be fitted to all tanks, cofferdams, voids, tunnels and compartments which are not fitted with other ventilation arrangements. In all vessels, the structural arrangement in double- bottom and other tanks shall be such as to permit the free passage of air and gases from all parts of the tanks to the vent pipes. Each tank shall be fitted with at least one vent pipe which shall be located at the highest part of the tank. Vent pipes shall be arranged to provide adequate drainage under normal conditions. No shutoff valve or closing device that can prevent the venting from a tank shall be installed in vent piping.

3.5.2 Height and Wall Thickness

3.5.2.1 Vents Exposed to Weather

Vent pipes on decks exposed to the weather are to have the following heights:

3.5.2.2 760 mm (30 in.) for those on the freeboard deck; and

3.5.2.3 450 mm (17.5 in.) for those on the superstructure deck.

The height shall be measured from the deck to the point where water may have access below. Where these heights may interfere with the working of the vessel, a lower height may be accepted, provided that INTLREG is satisfied that the closing arrangements and other circumstances justify a lower height.

The wall thicknesses of vent pipes where exposed to the weather shall be not less than that specified below. For vent pipes located on the fore deck,the strength and wall thickness requisites are also to conform to Part 4,Chapter 6, Sect-8

Nominal Size, d	*Min. Wall Thickness*
$d \leq$ 65 mm (2.5 in.)	6.0 mm (0.24 in.)
65 mm (2.5 in.) < d < 150 mm (6 in.)	by interpolation (1)
$d \geq$ 150 mm (6 in.)	8.5 mm (0.33 in.)

Note: 6 + 0.029(d – 65) mm or 0.24 + 0.026(d – 2.5) in.

3.5.2.4 Vents not Exposed to Weather

Vent pipes not exposed to the weather need not comply with the height and wall thickness required by Sect 3 [3.5.2.1]

3.5.3 Size

Vent pipes are to have a minimum internal diameter not less than 38 mm (1.5 in.) and not less than the internal diameter of the fill line. Where tanks shall be filled by pump pressure, the aggregate area of the vents in the tank shall be at least 125% of the effective area of the filling line, except that when overflows are fitted, the area of the overflow shall be at least 125% of the effective area of the filling line and the vents need not exceed the above minimum size. For vessels with length, *L,* (as defined in Part 3-Chapter1-Sect 2[2.1] between 80 meters (263

feet) and 90 meters (295 feet), the minimum diameter of vent pipes on the fore deck shall not to be less than 65 mm .

Notwithstanding the above, the pump capacity and pressure head shall be considered in the sizing of vents and overflows. When high capacity and/or high head pumps are used, calculations demonstrating the adequacy of the vent and overflows shall be submitted.

3.5.4 Location

Vents for compartments required for subdivision (such as double bottom or wing spaces) shall be led above the freeboard or bulkhead deck. In addition, vents for ballast tanks, fuel oil tanks, cargo tanks, thermal oil tanks and those cofferdams adjacent to cargo oil tanks shall be led to the weather. Vents for other tanks may terminate within the machinery space, provided that the open ends are situated to prevent the possibility of overflowing on electric equipment, engines or heated surfaces.

For vessels of 500 gross tons and above, vent pipes for fuel oil service tanks, fuel oil settling tanks and lubricating oil tanks which directly serve the engines shall be located and arranged and/or suitably protected from mechanical damage in order to minimize the possibility of being broken and allowing the ingress of seawater splashes or rainwater into the above mentioned tanks.

3.5.5 Vent Outlets

All vent and overflow pipes on the open deck are to terminate by way of return bends.

3.5.5.1 Fuel Oil Tank Vents

Vent outlets from fuel oil tanks shall be fitted with corrosion-resistant flame screens having a clear area through the mesh of not less than the required area of the vent pipe. Either a single screen of corrosion-resistant wire of at least 12 by 12 meshes per lineal cm (30 by 30 mesh per lineal inch), or two screens of at least 8 by 8 meshes per lineal cm (20 by 20 mesh per lineal inch) spaced not less than 13 mm (0.5 inch) nor more than 38 mm (1.5 inch) apart are acceptable.

*Note:*Mesh count is defined as a number of openings in a lineal cm (inch) counted from the center of any wire to the center of a parallel wire.

3.5.5.2 Vent Closure

All vents terminating in the weather shall be fitted with return bends (gooseneck), or equivalent, and the vent outlet shall be provided with an automatic means of closure type i.e., close automatically upon submergence (e.g., ball float or equivalent), complying with Sect 3[3.5.5.3] below

3.5.5.3 Vent Outlet Closing Devices

3.5.5.3(a) General. Where vent outlets required by Sect 3[3.5.5.2] above shall be fitted with automatic closing devices, they are to comply with the following:

3.5.5.3(b) Design.

1. Vent outlet automatic closing devices shall be so designed that they will withstand both ambient and working conditions, and be suitable for use at inclinations up to and including ± 40°.

2. Vent outlet automatic closing devices shall be constructed to allow inspection of the closure and the inside of the casing as well as changing the seals.

3. Efficient ball or float seating arrangements shall be provided for the closures. Bars, cage or other devices shall be provided to prevent the ball or float from contacting the inner chamber in its normal state and made in such a way that the ball or float shall not damaged when subjected to water impact due to a tank being overfilled.
4. Vent outlet automatic closing devices shall be self-draining.
5. The clear area through a vent outlet closing device in the open position shall be at least equal to the area of the inlet.
6. An automatic closing device is to:

a. Prevent the free entry of water into the tanks,

b. Allow the passage of air or liquid to prevent excessive pressure or vacuum developing in the tank.

7. In the case of vent outlet closing devices of the float type, suitable guides shall be provided to ensure unobstructed operation under all working conditions of heel and trim.
8. The maximum allowable tolerances for wall thickness of floats should not exceed ±10% of thickness.
9. The inner and outer chambers of an automatic air pipe head shall be of a minimum thickness of 6 mm (0.24 inch).

3.5.5.3(c) Materials.

i) Casings of vent outlet closing devices shall be of approved metallic materials adequately protected against corrosion.

ii) For galvanized steel air pipe heads, the zinc coating shall be applied by the hot method and the thickness shall be 70 to 100 micrometers (2.756 to 3.937 mil).

iii) For areas of the head susceptible to erosion (e.g., those parts directly subjected to ballast water impact when the tank is being pressed up, for example the inner chamber area above the air pipe, plus an overlap of 10° or more to either side) an additional harder coating should be applied. This shall be an aluminum bearing epoxy, or other equivalent coating, applied over the zinc.

iv) Closures and seats made of non-metallic materials shall be compatible with the media intended to be carried in the tank and to seawater, and suitable for operating at ambient temperatures between –25°C and 85°C (–13°F and 185°F).

3.5.5.3(d) Type Testing.

i) *Testing of Vent Outlet Automatic Closing Devices.* Each type and size of vent outlet automatic closing device shall be surveyed and type tested at the manufacturer's works or other acceptable location.The minimum test requirements for a vent outlet automatic closing device are to include the determination of the flow characteristics of the vent outlet closing device, the measurement of the pressure drop versus the rate of volume flow using water and with any intended flame or insect screens in

place and also tightness tests during immersion/emerging in water, whereby the automatic closing device shall be subjected to a series of tightness tests involving not less than two (2) immersion cycles under each of the following conditions:

- The automatic closing device shall be submerged slightly below the water surface at a velocity of approximately 4 m/min (13.12 ft/min) and then returned to the original position immediately. The quantity of leakage shall be recorded.
- The automatic closing device shall be submerged to a point slightly below the surface of the water. The submerging velocity shall be approximately 8 m/min and the air pipe vent head is to remain submerged for not less than 5 minutes. The quantity of leakage shall be recorded.
- Each of the above tightness tests shall be carried out in the normal position as well as at an inclination of 40 degrees under the strictest conditions for the device. In cases where such strictest conditions are not clear, tests shall be carried out at an inclination of 40 degrees with the device opening facing in three different directions: upward, downward, sideways (left or right).

The maximum allowable leakage per cycle shall not to exceed 2 ml/mm (1.312 x 10^{-2} gal/inch) of nominal diameter of inlet pipe during any individual test.

ii) *Discharge/Reverse Flow Test.* The air pipe head shall allow the passage of air to prevent excessive vacuum developing in the tank. A reverse flow test shall be performed. A vacuum pump or another suitable device shall be connected to the opening of the air pipe leading to the tank. The flow velocity shall be applied gradually at a constant rate until the float gets sucked and blocks the flow. The velocity at the point of blocking shall be recorded. 80% of the value recorded will be stated in the certificate. Each type and size of vent outlet automatic closing device shall be surveyed and type tested at the manufacturer's works or other acceptable location.

iii) *Testing of Non-Metallic Floats.* Impact and compression loading tests shall be carried out on the floats before and after pre-conditioning as follows:

Test Temperature °C (°F):	*–25°C (–13°F)*	*20°C (68°F)*	*85°C (185°F)*
Test Conditions			
Dry	Yes	Yes	Yes
After immersing in water	Yes	Yes	Yes
After immersing in fuel oil	NA	Yes	NA

Immersing in water and fuel oil shall be for at least 48 hours.

a) *Impact Test.* The test may be conducted on a pendulum type testing machine. The floats shall be subjected to 5 impacts of 2.5 N-m (1.844 lbf-ft) each and are not to suffer permanent deformation, cracking or surface deterioration at this impact loading.

Subsequently the floats shall be subjected to 5 impacts of 25 N-m (18.44 lbf-ft) each. At this impact energy level some localized surface damage at the impact point may occur. No permanent deformation or cracking of the floats is to appear.

b) *Compression Loading Test.* Compression tests shall be conducted with the floats mounted on a supporting ring of a diameter and bearing area corresponding to those of the float seating with which it is intended that float shall be used. For ball type float, loads shall be applied through a concave cap of the same internal radius as the test float and bearing on an area of the same diameter as the seating.

For a disc type float, loads shall be applied through a disc of equal diameter as the float.

A load of 3430 N (350 kgf, 770 lbf) shall be applied over one minute and maintained for 60 minutes. The deflection shall be measured at intervals of 10 minutes after attachment of the full load.

The record of deflection against time is to show no continuing increase in deflection and, after release of the load, there shall be no permanent deflection.

iv) *Testing of Metallic Floats.* The above described impact tests shall be carried out at room temperature and in the dry condition.

FIGURE 4.3.1

Example of Normal Position

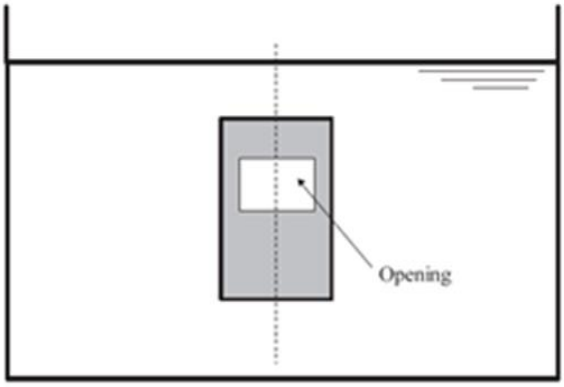

FIGURE 4.3.2

Example of Inclination 40 Degrees Opening Facing Upward

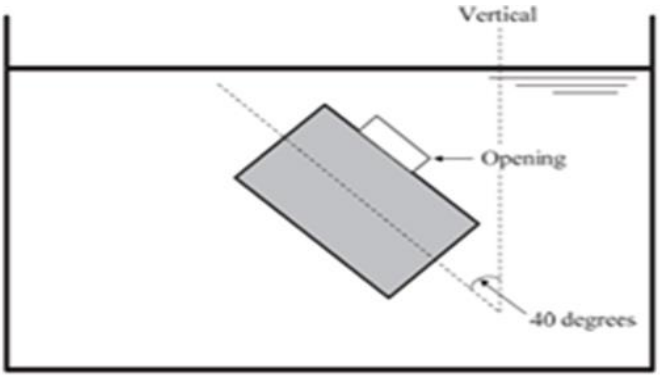

FIGURE 4.3.3

Example of Inclination 40 Degrees Opening Facing Downward

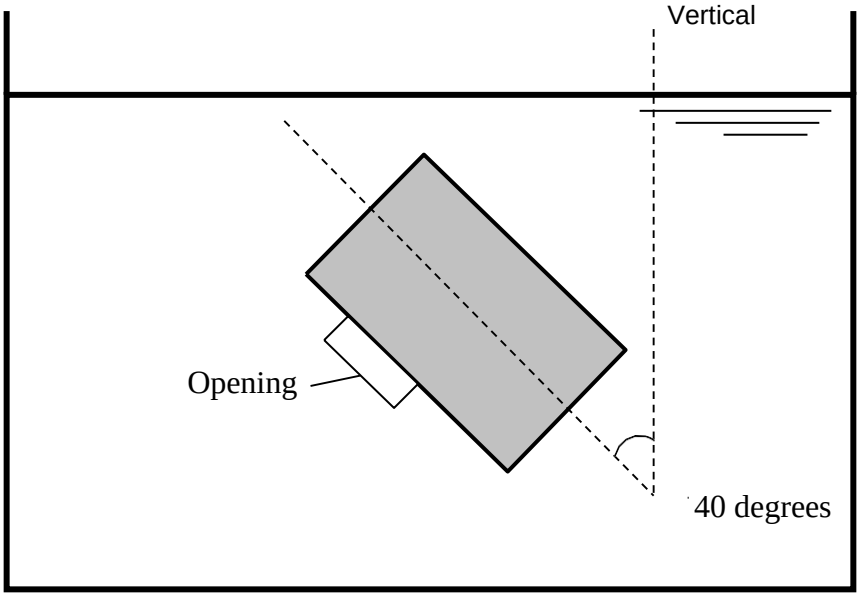

FIGURE 4.3.4

Example of Inclination 40 Degrees Opening Facing Sideways

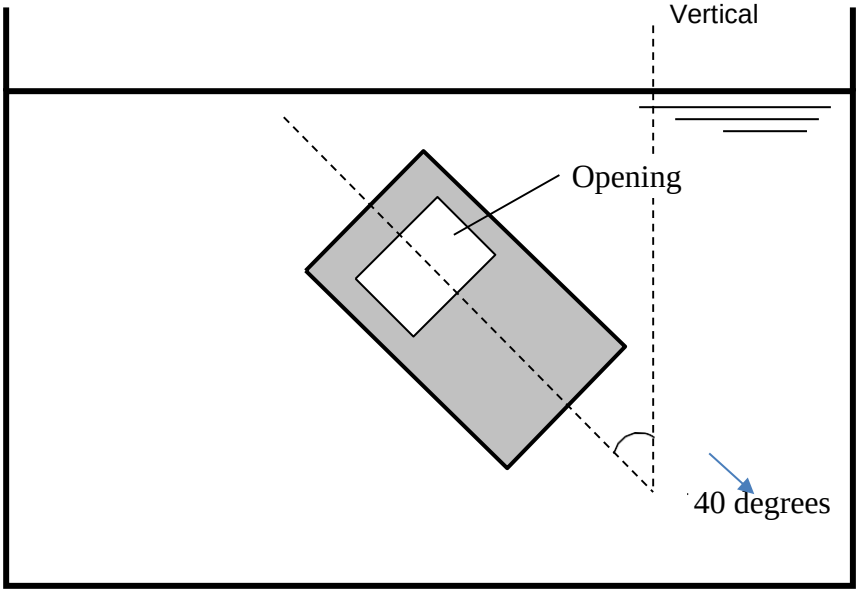

3.6 Overflow Pipes

3.6.1 General Requirements

Overflow pipes discharging through the vessel's side shall be located as far above the deepest load line as practicable and shall be provided with non-return valves located on the vessel's side. Where the overflow does not extend above the freeboard deck, there shall be provided, in addition, an efficient and accessible means for preventing water from passing inboard. Such means may consist of another non-return valve located in an accessible position above the deepest load line.

Where it is impracticable to locate the inner valve in an accessible position, one non-return valve with positive means for closing from an accessible position above the freeboard or bulkhead deck will be acceptable, provided there are suitable arrangements to insure the valve not being closed by unauthorized persons and provided a notice is posted in a conspicuous place at the operating station to the effect that the valve is never to be closed, except as may be required in an emergency.

3.6.2 Overflows from Combustible and Flammable Liquid Tanks

Overflow pipes from combustible and flammable liquid tanks shall be led to an overflow tank or to a storage tank with sufficient excess capacity (normally 10 minutes at transfer pump capacity) to accommodate the overflow. An alarm device shall be provided to give warning when the liquid reaches a predetermined level in the overflow tank. If a sight flow glass is also provided in the overflow pipe, then such sight glasses shall be fitted only in vertical sections of overflow pipes and be in readily visible positions.

3.6.3 Overflow Common Header

Where overflows from the tanks in more than one watertight subdivision are connected to a common header below the freeboard or bulkhead deck, the arrangement shall be such as to prevent fore-and-aft flooding of one watertight bulkhead subdivision from another in the event of damage.

3.7 Sounding

3.7.1 General

All tanks shall be fitted with a suitable means of determining the level of the liquid therein. Such means may be sounding pipes, gauge glasses or other approved level indicating systems or devices.

All compartments, including cofferdams and pipe tunnels, which are not readily accessible shall be fitted with sounding pipes if the compartment is adjacent to the sea or has pipes carrying liquids passing through it.

3.7.2 Sounding Pipes

Sounding pipes are not to be less than 38 mm (1.5 in.) inside diameter. They shall be led as straight as possible from the lowest part of the tank or compartment to the bulkhead deck or to a position which is always accessible. If sounding pipes terminate below the freeboard deck, they shall be provided with means for closing in the following manner:

3.7.2.1 Oil Tanks

Quick-acting, self-closing gate valves are required.

3.7.2.2 Other Tanks

A screw cap secured to the pipe with a chain or a gate valve is required.

Provision shall be made to prevent damaging the vessel's plating by the striking of the sounding rod. In general, sounding pipes are not to pass through bilge wells, but if this

shall not practicable, the pipe shall be at least extra-heavy in the bilge well. Sounding pipes for combustible or flammable fluids are not to terminate in accommodation spaces.

3.7.2.3 Ignition of Spillage

3.7.2.3(a) Fuel Oil Tanks. Sounding pipes for fuel oil tanks are not to terminate in any space where the risk of ignition of spillage may exist. In particular, they are not to terminate in machinery spaces or in close proximity to internal combustion engines, generators, electric equipment or surfaces with temperatures in excess of 220°C (428°F) in other spaces. Where it is impracticable to do otherwise, sounding pipes from fuel oil tanks may terminate in machinery spaces, provided the following are met:

i) The sounding pipes terminate in locations remote from ignition hazards or effective precautions such as shielding are taken to prevent fuel oil spillage from coming into contact with a source of ignition; and

ii) The terminations of sounding pipes are fitted with quick-acting, self-closing gate valves and with a small diameter self-closing test cock or equivalent located below the gate valve, provided for the purpose of ascertaining that fuel oil shall not present in the sounding pipe before the gate valve is opened. Provisions shall be made so as to prevent spillage of fuel oil through the test cock from creating an ignition hazard; and

iii) An approved level gauge is provided. However, short sounding pipes may be used for oil tanks other than double bottom tanks without the additional closed level gauge, provided an overflow system is fitted, Refer Chapter 4,Sect 3 [3.6] The oil level gauge may also be omitted for vessels less than 500 gross tons.

3.7.2.3(b) Lubricating Oil Tanks . Sounding pipes from lubricating oil tanks may terminate in machinery spaces provided that the following are met:

i) The sounding pipes are to terminate in locations remote from the ignition hazards, or effective precautions, such as shielding, are taken to prevent oil spillage from coming into contact with a source of ignition.

ii) The termination of sounding pipes is fitted with a quick-acting self-closing gate valve. Alternatively, for lubricating oil tanks that cannot be filled by a pump, the sounding pipes may be fitted with an appropriate means of closure such as a shut-off valve or a screw cap attached by chain to the pipe.

3.7.3 Gauge Glasses

Tanks may be fitted with gauge glasses, provided the gauge glasses are fitted with a valve at each end and adequately protected from mechanical damage.

Gauge glasses for tanks containing flammable or combustible liquids shall be of the flat glass type having approved self-closing valves at each end. For hydraulic oil tanks located in spaces other than category A machinery spaces, cylindrical gauge glasses with approved self-closing valves at each end will be acceptable, provided such spaces do not contain internal combustion engines, generators, major electrical equipment or piping having a surface temperature in excess of 220°C (428°F).

Gauge glasses for tanks integral with the shell which are located below the deepest load waterline shall be of the flat glass type and have approved self-closing valves at each end.

Isolation valves shall be fitted to allow for gauges removal without emptying the tank.

3.7.4 Level Indicating Systems and Devices

Where a level indicating device or system is provided for determining the level in a tank containing flammable or combustible liquid, failure of the device/system shall not to result in the release of the contents of the tank through the device. Level switches, which penetrate below the tank top, may be used, provided they are contained in a steel enclosure or other enclosures not being capable of being destroyed by fire. If an overflow shall not fitted, means are also to be provided to prevent overfilling of the tank in the event of malfunction of the indicating device/system.

SECTION 4 FUEL OIL AND LUBRICATING OIL SYSTEMS AND TANKS

Contents

4.1 Fuel Oil Piping Systems

4.1.1 General Arrangement

4.1.1.1 Tanks

4.1.1.1(a) Structural Tanks As far as practicable, fuel oil tanks shall be part of the vessel's structure and located outside of Category A machinery spaces. Where fuel oil tanks, other than double bottom tanks, are necessarily located adjacent to or within a Category A machinery space, the arrangements are to reduce the area of the tank boundary common with the machinery space of category A to a minimum, and to comply with the following:

i) Fuel tanks having boundaries common with machinery spaces of category A are not to contain fuel oils having a flash point of 60°C (140°F) or less.

ii) At least one of their vertical sides shall be continuous to the machinery space boundaries. The arrangements in Figure 4.4.1 are acceptable for structural tanks provided the requirements of Chapter 4,Sect 4[4.6] are complied with. (The side shell shall not being included in contiguous boundary of the category A machinery space.)

iii) The bottom of the fuel oil tank shall not to be exposed so that it will be in direct contact with flame should there be a fire in a Category A machinery space. The fuel tank is to extend to the double bottom. Alternatively, the bottom of the fuel oil tank shall be fitted with a cofferdam. The cofferdam shall be fitted with suitable drainage arrangements to prevent accumulation of oil in the event of oil leakage from the tank.

FIGURE 4.4.1

Acceptable Fuel Oil Tanks Arrangements Inside Category A Machinery Spaces

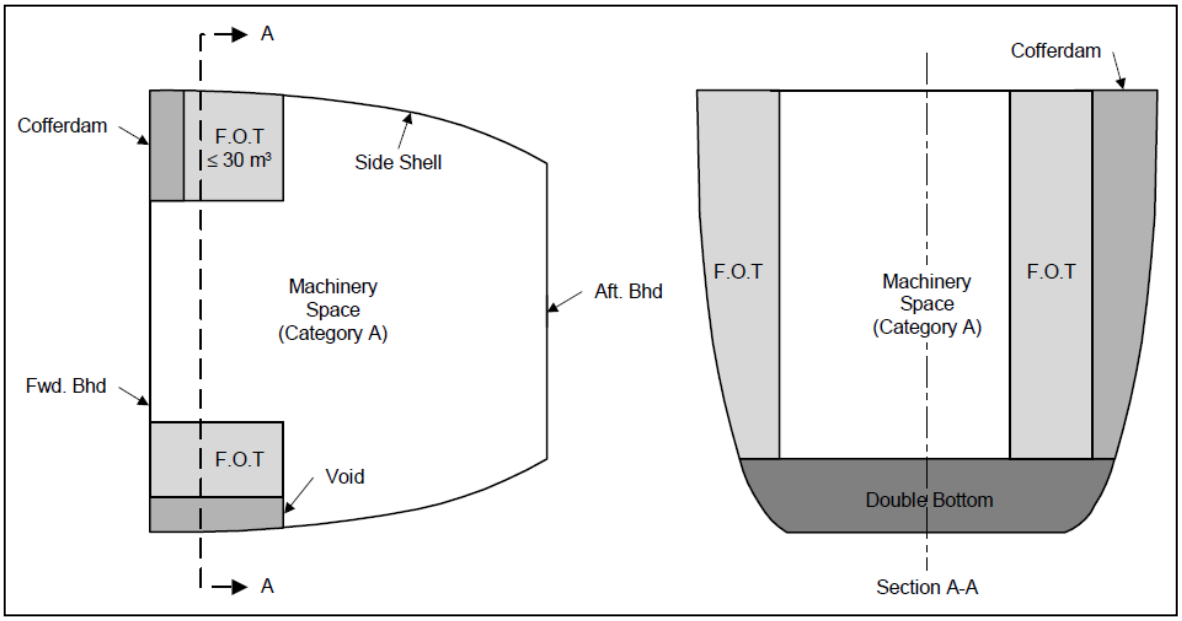

4.1.1.1(b) Free Standing Tanks In general, the use of free standing fuel oil tanks shall be avoided. Where permitted, they shall be placed in an oil tight spill tray of ample size with adequate means of drainage in accordance with Chapter 4,Sect 1 [1.5.13]

4.1.1.2 Spillage

No fuel oil tank shall be situated where spillage or leakage therefrom can constitute a hazard by falling on heated surfaces or electrical equipment. Precautions shall be taken to prevent any oil that may escape under pressure during inspection or maintenance of any pump, filter or heater from coming into contact with a source of ignition as defined in Ch 1,Sect 1 [1.7.9] .

To prevent the ignition of fuel oil, all hot surfaces likely to reach a temperature above 220°C (428°F) during service shall be insulated with non-combustible, and preferably non-oil-absorbent materials. Such insulation materials, if not impervious to oil, shall be encased in oil-tight steel sheathing or equivalent. The insulation assembly shall be well-installed and supported having regard to its possible deterioration due to vibration.

4.1.1.3 Service and Settling Tanks

Vessels of 500 gross tonnage and above with the keel laid or in similar stage of construction on or after 1 July 1998 are to meet the following requirements of *i)*, *ii)*, and *iii)*:

i) The vent pipes for fuel oil service and settling tanks which directly serve the engines shall be located and arranged and/or suitably protected from mechanical damage in order to minimize the possibility of being broken and allowing the ingress of seawater splashes or rainwater into the above mentioned tanks. At least two fuel oil service tanks shall be provided and the capacity with one service tank unavailable shall be sufficient for at least eight hours operation of the propulsion plant at maximum continuous rating and the generator plant (excluding emergency generator) at the normal sea load.

ii) Where the propulsion plant and auxiliary machinery are supplied by different service tanks or where more than one type of fuel is used onboard the vessel, the number and capacity of the fuel oil service tanks shall be sufficient such that the propulsion plant, including all auxiliary machinery vital for propulsion, and the generator plant have both a main fuel oil supply and a back-up fuel oil supply. The capacity of the tanks with one service tank unavailable shall be sufficient to provide the machinery it serves with enough fuel oil for at least eight hours operation, as required above.

iii) Alternatives equivalent to the above arrangements will be considered.

A service tank is a fuel tank which contains only fuel of a quality ready for use, that is, fuel of a grade and quality that meets the specification required by the equipment manufacturer. A service tank shall be declared as such and shall not to be used for any other purpose.

4.1.2 Piping, Valves and Fittings

Fuel oil pipes, valves and fittings shall be of steel or other approved materials.

4.1.3 Oil Heating Arrangements

4.1.3.1 Oil Heaters

Where heaters are provided in fuel oil systems, they shall be fitted with a temperature control and either a high temperature alarm or a low flow alarm, except where the maximum temperature of the heating medium does not exceed 220°C (428°F).

Where electric heaters are fitted, they shall be arranged to de-energize automatically when the oil level falls to a predetermined height to ensure that the heating elements are permanently submerged during operation. In addition, a safety temperature switch with a manual reset independent from the automatic control sensor shall be provided to cut off the electric power supply in order to avoid a surface temperature of 220°C (428°F) or above.

4.1.3.2 Tanks

Unless specially approved otherwise, fuel oil in storage tanks shall not to be heated to temperatures within 10°C (18°F) below flash point of the fuel oil.

Where heating arrangements are provided for settling and service tanks, the control and alarm requirements of Chapter 4,Sect 4 [4.1.3.1]are applicable.

4.1.4 Multiple Internal Combustion Engine Installations

In multi-engine propulsion installations on vessels 500 gross tons and above, which are supplied from the same fuel source, means of isolating the fuel supply and spill (return) piping to individual engines shall be provided. The means of isolation shall not to affect the operation of the other engines and shall be operable from a position not rendered inaccessible by a fire on any of the engines.

Similarly, for multi-engine auxiliary diesel installations on vessels 500 gross tons and above, the same requirements are applicable.

4.1.5 Overflows from Combustible and Flammable Liquid Tanks

For overflow pipes from combustible and flammable liquid tanks, Refer Chapter 4,Sect 3 [3.6.2]

4.2 Fuel Oil Transfer and Filling

4.2.1 General

Where fuel oil transfer arrangements are furnished, two transfer pumps shall be provided and one of them shall be independent of the main engine. The fuel oil pumping arrangements shall be distinct from the other pumping systems as far as practicable, and the means provided for preventing dangerous interconnection in service shall be thoroughly effective.

4.2.2 Pipes in Oil Tanks

Oil pipes and other pipes, where passing through oil tanks, shall be of wrought iron or steel, except that other materials may be considered where it is demonstrated that the material is suitable for the intended service. All packing shall be of a composition not affected by oil.

4.2.3 Control Valves or Cocks

Valves or cocks controlling the various suctions shall be located close to the bulkhead where the suctions enter the machinery spaces and, wherever practicable, directly over the gutter way in way of deep and settling tanks. Pumps, strainers, etc., requiring occasional examination are to have drip pans.

4.2.4 Valves on Oil Tanks

Where pipe lines emanate from fuel oil tanks at such a level that they will be subjected to a static head of oil from the tank, they shall be fitted with positive closing valves. The valves shall be secured at the tank. A short length of Extra Strong pipe connecting the valve to the tank is also acceptable. Where the fuel oil piping passes through adjacent tanks, the valve required above may be located where the pipe run exits the adjacent tank(s), provided the piping in the adjacent tanks is extra-heavy and has all welded connections. However, if the adjacent tank is a fuel oil tank, the pipe run within the fuel oil tank shall be at least standard thickness.

If the valves are installed on the outside of the tank, they are not to be of cast iron. The use of nodular iron, also known as ductile iron or spheroidal-graphite iron, may be used, provided the material has an elongation not less than 12% in 50 mm (2 in.). Arrangements shall be provided for closing them at the valve and for tanks having a capacity of 500 liters (132 US gal.) or greater, from a readily accessible and safe location outside of the compartment in which the valve is located.

If the positive closing valve required above is situated in a shaft tunnel or pipe tunnel or similar space, arrangements for closing may be effected by means of an additional valve on the pipe or pipes outside of the tunnel or similar space. If such an additional valve is fitted in the machinery space, it shall be operated from a position outside of this space.

If the valves are located inside of the tank, they may be of cast iron and arranged for remote control only, but additional valves for local control shall be located in the machinery space.

Where independent filling lines are fitted, they are to enter at or near the top of the tank, but if this is impracticable, they shall be fitted with non-return valves at the tank.

The valves required above may be remotely operated by reach rods or by electric, hydraulic or pneumatic means. The source of power to operate these valves shall be located outside of the space in which the valves are located. The positioning of the valve by either local or remote means shall not to interfere with the ability of the other means to close the valve. This remote means of closure is to override all other means of valve control. The use of an electric, hydraulic or pneumatic system shall not acceptable to directly keep the valve in the open position.

Materials readily rendered ineffective by heat are not to be used in the construction of the valves or the closure mechanism, unless adequately protected to ensure effective closure facility in the event of fire. If electric cables are utilized, they shall be fire-resistant, meeting the requirements of IEC 60331. . Hydraulic systems shall be in accordance with Chapter 6,Sect 4 [4.8.1.3] for both Class I and II piping systems. For a pneumatic system, the air supply may be from a source located from within the space, provided a separate air receiver complying with the following is located outside of the space:

i) Sufficient capacity to close all connected valves twice.

ii) Fitted with low air pressure alarm.

iii) Air supply line is fitted with a non-return valve adjacent to the receiver.

4.2.5 Remote Shutdown of Pumps

Machinery driving fuel oil transfer pumps, oil fuel unit pumps and other similar fuel pumps shall be fitted with remote shutdowns complying with Chapter 5,Sect 1[1.3.2]

4.2.6 Oil Drain Tanks

Drain tanks, where fitted, for waste oil, fuel oil overflows, drains, all oil drip pans, fuel injection piping, etc., are to have air and sounding pipes. Non-return valves shall be fitted in drain lines entering the drain tanks, except where backflow would not present a hazard. Suitable means shall be provided for pumping out these drain tanks.

Oil tanks not forming a part of the vessel's structure, where permitted by Chapter 4,Sect 4[4.1.1], are to have suitable drip pans with adequate means of drainage, in accordance with Chapter 4,Sect 1[1.5.13]

4.3 Fuel Oil Service and Injection Systems

Fuel oil service and injection systems for internal-combustion engines shall be in accordance with Chapter 2,Sect 1[1.2], [1.3], [1.4]

4.4 Low Flash Point Fuels

4.4.1 General

Fuel oils with a flash point of 60°C (140°F) closed-cup or below may be accepted for the following:

4.4.1.1

Vessels classed for restrictive service within areas having a climate ensuring that ambient temperatures of spaces where such fuel oil is stored will not rise within 10°C (18°F) below its flash point may use fuel oil with flash point of 60°C (140°F) or below, but not less than 43°C (110°F)

4.4.1.2

For emergency generators, fuel oil with a flash point of not less than 43°C (110°F) may be used. Refer Chapter 6,Sect 2[2.3.3.2]

4.4.2 Fuel Heating

For oil heating arrangements, Refer Chapter 4,Sect 4[4.1.3]

4.4.3 Fuel Oil Tank Vents

Vent pipes are to extend at least 2.4 m (8 ft) above the weather deck or other effective arrangements which have been approved shall be provided.

4.5 Lubricating Oil Systems

4.5.1 General

The lubricating systems shall be so arranged that they will function satisfactorily under the conditions specified in Chapter 1,Sect 1[1.9]. The lubricating-oil piping shall be entirely separated from other piping systems. In addition, the requirements of Chapter 4,Sections 4[4.1.1.2], [4.1.2] and [4.1.3] are applicable.

The requirements in Chapter 4,Sect 4[4.2.4],are also applicable for lubricating-oil tanks. However, arrangements for remotely closing the valve from a position outside of the

compartment need not be provided if inadvertent valve closure could result in damage to the running machinery due to lack of lubricating oil. Where the machinery is arranged for automatic shutdown upon loss of lubricating oil, the valve required by Chapter 4 Sect 4[4.2.4] shall be provided with means to close it from a readily accessible and safe location outside of the compartment in which the valve is located.

4.5.2 Sight Flow Glasses

Sight flow glasses may be used in lubricating systems, provided they are fire-resistant.

4.5.3 Internal Combustion Engines

For internal combustion engines, Refer also Chapter 2,Sect 1[1.5]

4.5.4 Reduction Gears

For reduction gears, Refer also Chapter 2,Sect 1[1.5.6]

4.5.5 Electrical Machinery

For electrical machinery, Refer Chapter 6 Sections 3[3.2.2] [3.2.3] and Chapter 6 Sect 4[4.2.8]

4.5.6 Hose Reels

Where hose reels are used for filling the engine or reduction gear sumps with oil, a self-closing valve shall be provided at the end of the filling hose to prevent spillage. Suitable arrangements shall be provided to properly drain and store the hose and reel when not in use. Hoses shall be approved for oil service and in accordance with the requirements for burst pressure, fire resistance, reinforcement and end fittings in Chapter 4 Sect 1[1.5.11]

4.6 Additional Measures for Oil Pollution Prevention

4.6.1 General

4.6.1.1 Application

The provisions of Sect [4.6] above provide the arrangement of fuel oil tanks for compliance with MARPOL 73/78, as amended. They shall be applied in addition to the requirements of Chapter 4 Sect 4 [4.1] and [4.2] ,they are to be applied and are applicable to all types of vessels classed with INTLREG.

4.6.1.2 Submission of Plans

Plans showing compliance with the applicable requirements in Section [4.6.1.3] below shall be submitted for review.

4.6.1.3 Tank Protection Requirements

4.6.1.3.1 General

The requirements in this section apply to vessels having an aggregate fuel oil capacity of 600 m^3 (21,190 ft^3) and above. However, the requirements need not be applied to individual fuel oil tanks with a capacity not greater than 30 m^3 (1060 ft^3), provided that the aggregate capacity of such excluded tanks shall not greater than 600 m^3 (21,190 ft^3). Further, individual fuel oil tanks are not to have capacity greater than 2,500 m^3 (88,290 ft^3).

Fuel oil tanks of any volume are not to be used for ballast water.

Fuel oil tank means a tank in which fuel oil is carried, but excludes those tanks which would not contain fuel oil in normal operation, such as overflow tanks. Fuel oil capacity means the volume of a tank in cubic meters (cubic feet) at 98% tank filling.

Fuel oil means any oil used as fuel oil connection with the propulsion and auxiliary machinery of the ship in which such oil is carried.

4.6.1.3.2 Protective Location of Tanks

The protective locations for the tanks specified in Sect [4.6.1.3.1] above shall be as follows:

4.6.1.3.2(a) Deterministic Approach . All applicable tanks shall be located away from the vessel's bottom or side shell plating for a distance as specified in *i), ii)* or *iii)*. Small suction wells may extend below fuel oil tanks bottoms, if they are as small as possible and the distance between the vessel's bottom plate and the suction well bottom shall not reduced by more than half of the distance required by *i)*.

i) For vessels having an aggregate oil fuel capacity of 600 m^3 (21,190 ft^3) and above, all tanks shall be arranged above vessel's molded line of bottom shell plating at least of the distance *h* as specified below:

$h = \frac{B}{20}$ (meter) or

h = 2.0 m (6.6 ft), whichever is smaller

where *B* is the breadth of the vessel, as defined in Part 3- Chapter 1-Sect 2[2.1], in m (ft).

h is in no case to be less than 0.76 m (2.5 ft).

ii) For vessels having an aggregate oil fuel capacity greater than or equal to 600 m^3 (21190 ft^3) but less than 5000 m^3 (176570 ft^3), tanks shall be arranged inboard of the molded line of side plating not less than the distance *w* as specified below:

$$w = 0.4 + \frac{2.4\,C}{20000}\ \text{m} \qquad w = 1.31 + \frac{7.87\,C}{706290}\ \text{ft}$$

where

C = vessel's total volume of oil fuel in m^3 (ft^3) at 98% tank filling;

w = at least 1.0 m (3.3 ft)

for individual tanks smaller than 500 m^3 (17,657 ft^3) *w* shall be at least 0.76 m (2.5 ft)

iii) For vessels having an aggregate oil fuel capacity of 5000 m^3 (176570 ft^3) and above, tanks shall be arranged inboard of the molded line of side plating not less than the distance *w* as specified below:

$$w = 0.5 + \frac{C}{20000}\ \text{m} \qquad w = 1.64 + \frac{C}{706290}\ \text{ft}$$

OR *W* = 2.0 m *W* = 6.6 ft,

whichever is smaller

where *C* is the vessel's total volume of oil fuel in m^3 (ft^3) at 98% tank filling.

The minimum value of *w*=1.0 m (3.3 ft).

4.6.1.3.2(b) Probabilistic Approach . As an alternative to the deterministic approach of [4.6.1.4 a)] above arrangements complying with the accidental oil fuel outflow performance standard of Regulation 12A, Annex I, MARPOL 73/78, as amended, would be acceptable.

4.6.2 Class Notation – POT

In addition to the requisites for fuel oil tank protection as specified in Chapter 4 Sect 4[4.6.1.3.1] utilizing the deterministic approach of Chapter 4 Sect 4[4.6.1.3.2] a) , where lubricating oil tanks are also arranged in the same manner as required by the deterministic approach Chapter 4 Sect 4[4.6.1.3.2] a) for fuel oil tanks, vessels shall be eligible for the optional Class notation, POT – Protection of Fuel and Lubricating Oil Tanks. Further, the following exemptions are applicable to lubrication oil tanks:

i) In application of equation in Chapter 4 Sect 4[4.6.1.3.2] a) ii) or iii), total volume of lubricating oil tanks need not be accounted for *C* (vessel's total volume of oil fuel in m^3 (ft^3) at 98% tank filling).

ii) Tanks used as main engine lubricating oil drain tanks need not be located in a protected location away from the vessel's side or bottom plates.

SECTION 5 INTERNAL COMBUSTION ENGINE SYSTEMS

Contents

5.1 Fuel Oil System

Fuel oil systems for internal combustion engines are to comply with Chapter 2,Sect 1 [1.2]

5.2 Lubricating Oil System

Lubricating oil systems for internal combustion engines are to comply with. Chapter 2,Sect 1 [1.5]

5.3 Cooling Water System

Cooling water systems for internal combustion engines are to comply with Chapter 2,Sect 1 [1.6]

5.4 Exhaust Piping

Exhaust piping for internal combustion engines is to comply with Chapter 2,Sect 1 [1.8]

5.5 Starting-air Systems

Starting-air systems for internal combustion engines are to comply with Chapter 2,Sect 1 [1.7]

SECTION 6 HYDRAULIC AND PNEUMATIC SYSTEMS

Contents

6.1 Hydraulic Systems

6.1.1 General

The arrangements for Group I hydraulic piping systems shall be in accordance with the requirements of this section, except that hydraulic systems which form part of a unit which is independently manufactured and assembled and which does not form part of the vessel's piping system (such as a crane) are not covered by this section.

Plans clearly showing the arrangements and details shall be submitted for review.

Hydraulic pumps, actuators, motors and accessories shall be suitable for the intended duty, compatible with the working fluid and shall be designed to operate safely at full power conditions. In general, the hydraulic fluid shall be non-flammable or have a flash point above 157°C (315°F).

The requirements for fuel oil tanks contained in Chapter 4,Section 4[4.1.1.2]and [4.1.2] applicable to tanks containing hydraulic fluid. Refer also Chapter 3,Sect 3[3.4] and Sect 2[2.9]

6.1.2 Valves

6.1.2.1 General

In general, valves are to comply with the requirements of Chapter 4 Section 2 [2.5] and [2.6]

6.1.2.2 Relief Values

Relief valves shall be provided for the protection of the hydraulic system. Each relief valve shall be capable of relieving not less than full pump flow with a maximum pressure rise of not more than 10% of the relief valve setting.

6.1.3 Piping

Piping is to meet the requirements of Chapter 4,Sect 1[1.3]and Sect 2[2.3] , except that mill tests need not be witnessed by the Surveyor. In such cases, mill certificates shall be provided which verify the chemical and mechanical properties for the pipe.

6.1.4 Pipe Fittings

Fittings and flanges are to meet the requirements of Ch 4 Sect 2 [2.5], [2.7] and [2.9] except as follows:

6.1.4.1 Split Flanges

Split flanges are not to be used in steering gear systems, certified thruster systems, nor in systems which are vital to the propulsion or safety of the vessel. Split flanges may be considered for use in other systems. Where split flanges are permitted, they are not to be used to join sections of piping, but may be used for connections to machinery, provided the materials and construction are suitable for the system design pressure.

6.1.4.2 Straight-Thread "O"-Ring Connection

Straight-thread "O"-ring type connections may be used for connections to equipment such as pumps, valves, cylinders, accumulators, gauges and hoses. Such connections are not to be used for joining sections of pipe.

6.1.4.3 Tapered Threaded Connection

Tapered threaded connections up to and including 89 mm O.D. (3 in. NPS) may be used without limitation for connections to equipment such as pumps, valves, cylinders, accumulators, gauges and hoses. Tapered threaded connections are not to be used in steering gear systems, controllable pitch propeller systems, and other systems associated with propulsion or propulsion control, except where permitted by.Chapter 4,Sect 2[2.7.1] Such connections are not to be used for joining sections of pipe, except where permitted by Chapter 4,Sect 2[2.7.1]

6.1.5 Accumulators and Fluid Power Cylinders

Accumulators are to meet the requirements of Part 5A, Chapter 8,Sect 6[6.2.3.4] Each accumulator which may be isolated shall be protected by suitable relief valves. Where a gas charging system is used, a relief valve shall be provided on the gas side of the accumulator.

Fluid Power Cylinders are to meet the requirements of Chapter 4 Sect 6 [6.2]

6.1.6 Design Pressure

The pressure used for determining the strength and design of piping and components shall not to be less than the relief valve setting.

6.1.7 Segregation of High Pressure Hydraulic Units

Hydraulic units with working pressures above 15.5 bar (15.8 kgf/cm^2, 225 psi) installed within a machinery space shall be placed in separate room or rooms or shielded as necessary to prevent any oil or oil mist that may escape under pressure from coming into contact with surfaces with temperatures in excess of 220°C (428°F), electrical equipment or other sources of ignition. For the purpose of this requirement, a hydraulic unit includes the power pack and all components of the hydraulic piping system.

6.2 Fluid Power Cylinders

6.2.1 General

Fluid power cylinders subject to pressures or temperatures greater than those indicated below shall be designed, constructed and tested in accordance with a recognized standard for fluid power cylinders.

- *Hydraulic fluid – flammable:* 7 bar (7.1 kgf/cm^2, 101.5 psi) or 60°C (140°F)
- *Hydraulic fluid – non-flammable*: 16 bar (16.3 kgf/cm^2, 232 psi) or 200°C (392°F)
- *Air:* 16 bar (16.3 kgf/cm^2, 232 psi) or 200°C (392°F)

Acceptance will be based on the manufacturer’s certification of compliance and on verification of permanent identification on each cylinder bearing the manufacturer's name or trademark, standard of compliance and maximum allowable working pressure and temperature.

6.2.2 Non-compliance with a Recognized Standard

Cylinders subject to pressures or temperatures higher than those indicated above which are not constructed to a recognized standard may be accepted based on the following:

i) Regardless of diameter, the design of the cylinder shall be shown to comply with one of the following:

- A recognized pressure vessel code,
- Part 5A-Chapter 10,Sect-1 of the Rules. For instance, the cylinder is to have a wall thickness not less than that given by equation 2 of Part 5A-Chapter -10,Sect 3/[3.2.1] and the cylinder ends are to meet the requirements of flat heads in Part 5A-Chapter-10,Sect 3/[3.3.4] or
- Verification through burst tests. Steel cylinders (other than cast steel) are to withstand not less than 4 times the maximum allowable working pressure, while cast steel, cast iron and nodular iron cylinders are to withstand not less than 5 times the maximum allowable working pressure.

Documentation in this regard shall be submitted for review.

ii) Each individual unit shall be hydrostatically tested to 1.5 times the maximum allowable working pressure (2 times, for cast iron and nodular iron cylinders) by the manufacturer. A test certificate shall be submitted.

iii) Each cylinder shall be affixed with a permanent nameplate or marking bearing the manufacturer's name or trademark and the maximum allowable working pressure and temperature.

6.2.3 Materials

i) The materials of the cylinders are to comply with the requirements of the standard or code to which they are designed and constructed. Where the design is verified though burst tests, the materials of the cylinder are to comply (a) & (b) above

ii) Ordinary cast iron having an elongation of less than 12% shall not to be used for cylinders expected to be subjected to shock loading.

iii) Copies of certified mill test reports shall be made available to the Surveyor upon request.

6.2.4 Rudder Actuators- Rudder actuators are to conform the requirements of Ch 3 Sect 3[3.3.7]

6.2.5 *Cylinders for Class III Piping Systems*. Cylinders subjected to Class III fluid temperatures and pressures may be used as per the specified manufacturer's rating.

6.2.6 *Independently Manufactured and Assembled Units*. Cylinders which are a part of an independently manufactured and assembled unit that is not parts of vessel's piping system are not covered herein this sub-section.

6.3 Pneumatic Systems

6.3.1 Application

Requirements of Sect [6.3] apply to shipboard pneumatic systems for control and actuation services. Requirements for starting air systems are in Chapter 2 Sect 1[1.7] Pneumatic systems fitted in self-contained equipment not associated with propulsion and maneuvering of the vessel and completely assembled by the equipment manufacturer need not comply with this subsection. Such pneumatic systems, however, are to conform with the accepted industry practices

6.3.2 Pneumatic System Components

6.3.2.1 Air Reservoirs

Air reservoirs with a design pressure greater than 6.9 bar (7 kgf/cm^2, 100 lb/in^2) are to be certified by IRS .Refer Part 5A, Chapter-10, Sec-1, [1.5], and for accumulators

Refer Chapter 4-sect 6[6.1.5] . Air reservoirs are required to be fitted with drain connections effective under extreme conditions of trim. Where they can be isolated from the system safety valve, they are to be provided with their own safety valves or equivalent devices.

6.3.2.2 Pipe Fittings and Joints

The certification for pipe fittings and joints is required to meet the general requirements of certification stated in Part 5A Chapter 8 Sec-1, [1.4.1]; for materials in Sect-2[2.2]; and design in Sec-2[2.3.3] & [2.3.9], subject to limitations stated in Table 4.6.1 below

Table 4.6.1: Pipe Joint Limitations for Pneumatic Systems

Pipe joints	**Class I**	**Class II**	**Class III**
Butt welded joint	No limitation	No limitation	No limitation
Socket welded joint (Refer note 1)	Max. 80 mm (3 in.)	Max. 80 mm (3 in.)	No limitation
Slip-on welded sleeve joint (Refer note 2)	Max. 80 mm (3 in.)	Max. 80 mm (3 in.)	No limitation
Flanged joint (Refer note 3)	Types A, B	Types A, B, C & D	Types A, B, C & D
Taper-thread joint (Refer note 4)	≤80mm(3in.)permissible pressure/size:Refer Sect-2, [2.3.3.5-(a)]	≤80mm (3in.)permissible pressure/size:refer Sec-2, [2.3.3.5-(a)]	No limitation
Compression couplings (Refer note 5)	≤ 60 mm (2.4 in.) OD.	≤ 60 mm (2.4 in.) OD.	No limitation.

Note:

1. Refer Part 5A -8-Sec-2, [2.3.3.2] for further operational limitations.
2. Refer Part 5A -8-Sec-2, [2.3.3.3] for further operational limitations.
3. Pipe sizes indicated are nominal diameter, except where specified otherwise.

6.3.2.3 Pneumatic Power Cylinders

The requirements of hydraulic cylinders in Part 5A-Chapter8-6/[6.3.2.3] are also applicable to pneumatic cylinders

6.3.3 Pneumatic System Requirements

6.3.3.1 Pneumatic Air Source

Compressed air for general pneumatic control and actuation services may be drawn from engine starting air reservoirs. In which case, the aggregate capacity of the starting air reservoirs shall be adequate for continued operation of these services after the air necessary for the required number of engine starts as specified Chapter 2 Sect 1[1.7.2.1] has been used.

For propulsion remote control purposes, pneumatic air shall be available from at least two air compressors. The starting air system, where consisting of two air compressors, may be used for this purpose. The required air pressure shall be automatically maintained. Pneumatic air supplies to safety and control systems may be derived from the same source but shall be by means of separate lines.

6.3.3.2 Air Quality

6.3.3.2(a) General. Provisions shall be made to minimize the entry of oil or water into the compressed air system. Appropriate separation and drainage arrangements shall be provided before the air enters the reservoirs.

6.3.3.2(b) Safety and Control Air Systems. For requirements regarding the quality of the air supplied to safety and control air systems, Chapter 7,Sect 2[2.6.1.4]

6.3.3.3 Overpressure Protection

Means shall be provided to prevent overpressure in any part of the pneumatic system. This includes the water jackets or casings of the air compressors and coolers which may be subjected to dangerous over-pressure due to leakage into them from the air pressure parts.

SECTION 7 CARGO SYSTEMS

Contents

*Note:*Vessels classed as **Oil Carrier** in accordance with Part 7B, Chapter 3 of the INTLREG *Rules for Building and Classing Steel Vessels* are to meet the additional requirements in Section [7.1] through Section[7.3] of these Rules

7.1 Cargo Pumps

7.1.1 Construction

Cargo pumps shall be so designed as to minimize the danger of sparking.

7.1.2 Installation

Care shall be taken to prevent leaks at the stuffing box. Where the shafts pass through gastight bulkheads, flexible couplings shall be provided in shafts between the pumps and prime movers, and stuffing boxes which can be lubricated from outside of the pump room shall be fitted at the bulkheads. The seal parts of the glands shall be of non-sparking construction. If a bellows piece is incorporated in the design, it shall be pressure-tested before being fitted.

Cargo pumps, ballast pumps and stripping pumps installed in cargo pump rooms and driven by shafts passing through pump room bulkheads shall be fitted with temperature sensing devices for bulkhead shaft glands, bearings and pump casings. High temperature alarms (audible and visual) shall be provided at the cargo control room or the pump control station.

7.1.3 Relief Valve and Bypass

A relief valve of suitable type shall be installed in the discharge of each pump, except as noted in Chapter 4 Sect 1[1.5.9] , and piped back into the suction. A bypass shall be provided around the pump for use when loading through the suction piping.

7.1.4 Pressure Gauges

One pressure gauge for each pump shall be located at the pump discharge, and where the pumps are operated by engines or motors external to the pump room, additional gauges shall be provided which are visible from the operating station.

7.2 Cargo Piping Systems

7.2.1 General

Cargo piping systems shall be independent of all other piping systems and are not to pass through fuel oil tanks nor spaces containing machinery where sources of vapor ignition are normally present. Provisions shall be made for expansion of the cargo piping system.

For vessels of 5000 tons deadweight and above, cargo piping, including vent and sounding piping for cargo tanks, shall not to pass through ballast tanks, except for short runs of welded steel extra heavy pipe or equivalent construction.

For vessels less than 5000 tons deadweight, cargo piping passing through ballast tanks shall be steel of extra heavy or equivalent construction. In the portion of the cargo piping located within the ballast tank, only expansion bends (not glands) shall be installed to allow for expansion and contraction stresses. All joints within the ballast tanks shall be welded or have extra heavy flanges. The number of flanged joints shall be kept to a minimum.

Where requested by the Owner, vessels in which all cargo piping and valve control piping is located above the double bottom will be distinguished in the *Record* by the notation **CPP** (Cargo Piping Protected). The **CPP** notation shall not a condition of classification.

Cargo loading pipes shall be led as low as practicable in the cargo tank. Also Refer Chapter 4 Sect 1[1.5.12] and Chapter 4 Sect 2[2.2.3]

7.2.2 Cargo Tank Ballasting

7.2.2.1 Suction

Where it is necessary to provide a sea suction to the cargo oil pumps for severe weather ballasting, tank cleaning or other purposes, means of isolating the pumps from the sea chest shall be provided. The means of isolation shall be either a blank flange or a removable spool piece. A shut-off valve shall be fitted on each side of the blank flange or spool piece. As an alternative, the means of isolation may be two valves located inboard of the sea chest, one of which shall be capable of being locked in the closed position. Means shall be provided for detecting leakage past these valves.

7.2.2.2 Discharge

The discharge system shall be so designed as to enable ballast water which is carried in cargo tanks to be processed and discharged in accordance with Regulation 15 of Annex I to the International Convention for the Prevention of Pollution from Ships (MARPOL) 1973/1978, as amended.

7.2.3 Bow or Stern Loading and Unloading

Where bow or stern loading or unloading connections are provided, cargo lines forward or aft of the cargo area shall be led outside accommodation spaces, service spaces, machinery spaces and control stations. Pipe joints outside the cargo area shall be welded, except for connections to the manifold or loading/unloading equipment.

The cargo loading/unloading lines shall be clearly identified and provided with means to segregate them from the cargo main line when not in use. The segregation shall be achieved by either two valves located in the cargo area which can be locked in the closed position and fitted with means to detect leakage past the valves, or by one valve together with another closing device providing an equivalent standard of segregation, such as a removable spool piece or spectacle flange.

The loading/unloading connection shall be fitted with a shut-off valve and a blank flange. The blank flange may be omitted if an equivalent means of closing is incorporated in the connection to the hose coupling.

Arrangements shall be provided for cargo lines outside of the cargo area for easy draining to a slop tank or cargo tank and for cleaning and inerting. Spill containment shall be provided under the loading and unloading manifolds. The space within 3 m (10 ft) of the manifold and oil spill containment boundary shall be considered as a restricted area with regard to electrical equipment or other sources of vapor ignition.

7.2.4 Operating-rod Stuffing Boxes

Stuffing boxes shall be fitted where operating rods from cargo valves pass through gastight structural parts.

7.3 Other Piping Systems on Oil Carriers

7.3.1 Pump-room and Cofferdam Bilge Systems

Provision shall be made for removing drainage from the pump-room bilges and adjacent cofferdams. A separate bilge pump, eductor or a bilge suction from a cargo pump or cargo stripping pump may be provided for this purpose. The pump shall not to be located in, nor is the piping to pass through, spaces containing machinery where sources of vapor ignition are normally present. Where a bilge suction is provided from a cargo or stripping pump, a stop-check valve shall be fitted in the bilge suction branch. An additional stop valve shall be fitted

when the bilge suction branch is arranged so that it may be subjected to a head of oil from the filling line. Pump-room bilge suction and discharge valves and bilge-pump controls shall be operable from in the pump room, unless Flag Administrations have a specific requirement for remote operation, either from an accessible position outside the pump-room or from the pump-room casing above the freeboard deck. High levels of liquid in the pump room bilges is to activate an audible and visible alarm in the cargo control room and on the navigation bridge.

7.3.2 Machinery Space Bilge System

Where bilge slops from other than the cargo pump room are discharged into a cargo slop tank, the discharge piping shall be arranged as follows.

i) Enters the cargo slop tank from the weather deck through the tank top.

ii) The tank penetration is located as close to a vertical tank boundary as practicable.

iii) Within the tank, the line is as short as practicable and is arranged to discharge against the vertical boundary.

iv) A stop-check valve is provided in the discharge line and is located within the engine room as close to the engine room bulkhead as possible.

v) A loop seal shall be located in the cargo pump room or other suitable location outside of the engine room. The height of the loop seal is to provide a static head pressure greater than the pressure setting of the cargo slop tank P/V valve or a minimum of 762 mm (30 inches), whichever is greater. A means shall be provided to prevent the loop seal from freezing.

vi) A non-return valve shall be located in the discharge line on deck as close to the tank penetration as practicable.

7.3.3 Ballast Piping

For vessels of 5000 gross tons and above, ballast piping, including vent and sounding piping for ballast tanks, shall not to pass through cargo tanks, except for short runs of welded steel extra heavy pipe or equivalent construction.

For vessels less than 5000 tons deadweight, ballast piping passing through cargo tanks shall be steel of extra heavy or equivalent construction. All joints within the cargo tanks shall be welded or have extra heavy flanges. The number of flanged joints shall be kept to a minimum. In the portion of the ballast piping located within the cargo tank, only expansion bends (not glands) shall be installed to allow for expansion and contraction stresses.

Ballast piping permitted to pass through cargo or connected to ballast tanks adjacent to cargo tanks shall not to pass through spaces where sources of vapor ignition are normally present. Connections to the fire main for ballasting or deballasting with eductors shall be fitted with a non-return valve.

Arrangements may be provided in the cargo pump room or on deck, in the case of vessels without a cargo pump room, for a temporary connection between cargo and ballast piping by means of a portable spool piece, and are to have a non-return valve to prevent cargo from entering the ballast system and shut-off valves with blind flanges on both the ballast and cargo piping connections. Temporary connections shall be reported to the Surveyor.

For integrated cargo and ballast systems, Refer Chapter 6 Sect 6[6.1.11]

7.3.4 Piping Through Cargo Tanks

Where the arrangement of the vessel is such as to necessitate the passing through the cargo tanks of piping other than that necessary for the handling or heating of the cargo or for fire protection, the piping systems will be subject to special consideration.

7.3.5 Cargo Heating Systems

7.3.5.1 General

The medium used to directly heat the cargo oil shall be contained solely within the cargo area unless the return line of the heating system is led to an inspection tank. The inspection tank shall be of a closed type, dedicated to the cargo heating system and vented to the weather. A corrosion- resistant flame screen shall be fitted at the vent outlet. The inspection tank may be located within the main machinery space, in which case, the vent is to terminate outside of the cargo deck area and shall not to be located within 3 m (10 ft) of ventilation intakes or sources of ignition. Cargo heating piping within cargo tanks shall be all welded or brazed, except that the use of a limited number of flanged joints to facilitate installation and repair will be specially considered.

7.3.5.2 Thermal Oil Installations

Where thermal oil heating systems are used, they are to comply with the requirements in Part 5A/Chapter 10/sect 7

7.3.6 Slop Tanks in Combination Carriers

Slop tanks in vessels alternately carrying oil or dry bulk cargoes are to have an approved independent venting system. A completely separate pumping system shall be provided for the slop tanks or, alternatively, all suction and filling connections for the slop tanks shall be provided with spectacle blank flanges. Suitable warning notices shall be posted when carrying dry cargo with flammable liquids or vapors in the slop tanks.

7.3.7 Duct Keels in Double Bottoms

Duct keels or pipe tunnels are not to pass into machinery spaces. Provision shall be made for at least two exits to the open deck arranged at a maximum distance from each other. One of these exits fitted with a watertight closure may lead to the cargo pump room. Provision shall be made in the duct for adequate mechanical ventilation.

7.3.8 Cargo Venting Systems

Cargo tank venting systems for oil carriers shall be in accordance with Regulation II-2[4.5.3] of SOLAS 1974, as amended and the following.

7.3.8.1 P-V Valve Setting

The pressure setting of pressure-vacuum relief valves shall not to exceed 0.18 bar (0.18 kgf/cm^2, 2.6 psi) above atmospheric for vessels of 100 m (328ft) in length and 0.12 bar (0.12 kgf/cm^2, 1.7 psi) for vessels of 61 m (200 ft) in length or less. For intermediate lengths, intermediate pressures will apply. The vacuum setting shall be at a pressure equal or less than 0.07 bar (0.07 kgf/cm^2, 1 psi) below atmospheric.

Positive pressures up to and including 0.70 bar (0.70 kgf/cm^2, 10 psi) gauge will be allowed in specially designed integral tanks. Refer Part 5A/Chapter 13/Sect 3[3.5.6.3]of the *INTLREG Rules for Building and Classing Steel Vessels*.

Calculations shall be submitted showing that cargo tanks will not be subjected to a pressure in excess of the P-V valve setting.

7.3.8.2 Liquid Level Control

Provision shall be made to guard against liquid rising in the venting system to a height that would exceed the design head of the cargo tanks. This may be accomplished by using high level alarms or overflow control systems or other equivalent means together with gauging devices and tank filling procedures. In this regard, as applicable, a vent/overflow control system analysis for the protection of the cargo tanks shall be submitted for review. This system analysis is to clearly indicate the anticipated worst load/unload condition criteria.

7.3.8.3 Flame Screens

Vent outlets from cofferdams and from ballast tanks adjacent to cargo oil tanks shall be fitted with corrosion-resistant flame screens having a clear area through the mesh of not less than the area of the pipe.

7.3.8.4 Isolation

For vessels fitted with inert gas systems, arrangements shall be provided to protect cargo tanks against the effect of overpressure or vacuum caused by thermal variations when the cargo tanks are isolated from inert gas systems.

7.3.9 Inert-gas System

When tank vessels are equipped with a system whereby inert gas is continuously maintained in the tanks, such a system shall be in accordance with Section Part 5A/Chapter 13-Sect 2/[2.1.9] and the following.

7.3.9.1 General

The inert gas may be treated flue gas from boiler(s) or from a separate inert gas generator. In all cases, automatic combustion control suitable for operation under all service conditions shall be fitted. Any proposal to use other sources of inert gas will be specially considered.

7.3.9.2 Pressure

The systems shall be so designed that the maximum pressure which can be exerted on the tank(s) does not exceed 0.24 bar (0.24 kgf/cm^2, 3.5 psi).

7.3.9.3 Blower Isolating Valves

Shut-off valves shall be fitted on both suction and discharge connections for each blower.

7.3.9.4 Demister

Demisters or equivalent devices shall be provided to minimize carry-over of water from the scrubber and the deck water seal.

7.3.9.5 Gas Regulating Valve

The gas regulating valve shall be arranged to close automatically when any of the following additional conditions apply.

- Loss of water pressure to deck seal(s)
- Loss of control power

7.3.9.6 Blowers

When two blowers are provided, the total required capacity of the inert gas system is preferably to be divided equally between the two blowers and in no case is one blower to have a capacity less than $^1/_3$ of the total capacity required.

7.3.9.7 Scrubber Cooling Pump

A minimum of two pumps shall be provided for inert gas scrubber cooling, one of which shall be dedicated for only this service. Pumps, other than the required dedicated pump, may be used for other services such as bilge, ballast or general service.

7.3.9.8 Oil-Fired Inert Gas Generators

7.3.9.8(a) Fire protection. The compartment in which any oil-fired inert gas generator is situated is to meet the requirements of Ch 5 Sect 1[1.5], Chapter 5 Sect 2[2.5] and Chapter 5 Sect 2[2.11]

7.3.9.8(b) Venting. Arrangements shall be made to vent the inert gas from oil-fired inert gas generators to the atmosphere when the inert gas produced is off-specification, e.g., during starting- up or in the event of equipment failure.

7.3.9.8(c) Fuel Oil Shutdown. Automatic shutdown of the fuel oil supply to inert gas generators shall be arranged on predetermined limits being reached in respect of low water pressure or low water flow rate to the cooling and scrubbing arrangement and in respect of high gas temperature.

7.3.9.9 Pump Certification

The fuel oil pumps serving the boiler or inert gas generator and the cooling water pumps serving the flue gas scrubber shall be certified in accordance with Ch 4 Sect 2[2.1]

7.3.10 Cargo Vapor Emission Control Systems

Cargo vapor emission control systems, where provided, shall be in accordance with Part 7B of the *INTLREG Rules for Building and Classing Steel Vessels*.

7.3.11 Crude Oil Washing

When tank vessels are equipped with a system whereby crude oil is utilized for the washing of tanks, the valves, piping and other fittings shall be in accordance with Part 7B for cargo piping.

7.4 Cargo Oil Systems on Vessels Other Than Bulk Oil Carrier Type

7.4.1 Cargo-tank Valves in Dry-cargo Vessels

The control arrangement for valves at the sides of cargo-oil tanks, fitted in dry-cargo vessels, shall be in accordance with Chapter 4,Sect 4[4.2.4]

7.4.2 Edible-oil Cargoes

The arrangement for carriage of edible oils will be subject to special consideration.

7.4.3 Venting System for High Flash Point Cargoes

Where a vessel is intended only for the carrying of combustible liquids having a flash point above 60°C (140°F), closed cup test, a venting system consisting of individual return-bend vents fitted with flame screens may be fitted in lieu of that described in Chapter 4 Sect 7[7.3.8]

7.5 Cargo-Handling Systems for Dry Bulk Self-Unloading Vessels

Dry bulk cargo vessels are to meet the following additional requirements when fitted with self-unloading cargo-handling equipment.

7.5.1 Fail-Safe Arrangements and Safety Devices

Fail-safe arrangements and safety devices shall be provided on the self-unloading equipment. A system is considered fail-safe if a component failure or loss of power will result in a controlled securing of the equipment or control of movement so as not to endanger personnel.

7.5.2 Hydraulic Piping Installations

The passage of self-unloading system hydraulic pipes through cargo holds shall be limited to only that which is necessary for operational purposes. Pipes installed within cargo holds shall be protected from mechanical damage.

System connection to other hydraulic systems is subject to special consideration. Failure in any one part of the self-unloading hydraulic system shall not to cause the failure of other parts of the self-unloading system or of other ship's systems.

7.5.3 Electrical, Control, Alarm and Monitoring Equipment Installation

For requirements regarding electrical equipment, controls, alarms, monitors and hazardous areas (as applicable), Refer Chapter 6 Sect 3[3.5] and Chapter 6 Sect 6[6.2]

SECTION 8 OTHER PIPING SYSTEMS AND TANKS

Contents

8.1 Fixed Oxygen-Acetylene Installations

8.1.1 Application

Provisions of Sect [8.1.2] below apply to fixed oxygen-acetylene installations with two or more cylinders of oxygen and acetylene, respectively. Spare cylinders of gases need not be counted for this purpose. Provisions of Sect [8.1.3] and [8.1.4] below, as applicable, shall be conformed for fixed installations irrespective of the number of cylinders.

8.1.2 Gas Storage

8.1.2.1 Storage of Gas Cylinders

8.1.2.1(a) Storage room. The gas cylinders shall be stored in rooms dedicated for this purpose only. A separate room shall be provided for each gas. The rooms shall be on or above the upper-most continuous deck and shall be constructed of steel. Access to the rooms shall be from the open deck and the door is to open outwards. The boundaries between the rooms and other enclosed spaces shall be gastight. Suitable drainage of the storage room or area shall be provided.

8.1.2.1(b) Open area. Where no storage room is provided, the gas cylinders may be placed in an open storage area. In such cases, they shall be provided with weather protection (particularly from heavy seas and heat) and effectively safeguarded from mechanical damage. Suitable drainage of the open storage area shall be provided.

8.1.2.1(c) Piping passing through storage room or area. Piping systems carrying flammable fluids are not to run through the storage room or open storage area

8.1.2.2 Ventilation of Storage Room

Each gas cylinder storage rooms shall be fitted with ventilation systems capable of providing at least six air changes per hour based on the gross volume of the room. The ventilation system shall be independent of ventilation systems of other spaces. The space within 3 m (10 ft) from the power ventilation exhaust, or 1 m (3 ft) from the natural ventilation exhaust shall be considered a hazardous area. The fan is to be of the non-sparking construction, Refer Chapter 6,Sect 3[3.6.4]. Small storage spaces provided with sufficiently large openings for natural ventilation need not be fitted with mechanical ventilation.

8.1.2.3 Electrical Installation in Storage Room

Electrical equipment installed within the storage room, including the ventilation fan motor, is required to be of the certified safe type, Refer to Chapter 6 Sect 3[3.6.1.1] and shall be IEC Publication 60079-20-1 group IIC class T2.

8.1.3 Piping System Components

8.1.3.1 Pipe and Fittings

8.1.3.1(a) General In general, all oxygen and acetylene pipes, pipe fittings, pipe joints and valves shall be in accordance with the provisions of Chapter 4, Section 2 for Class I piping systems, except as modified below. Further, only high pressure oxygen and acetylene piping shall be certified as Class I piping, Refer Chapter 4 Sect 1[1.3.1] for the material testing.

8.1.3.1(b) Piping materials . Materials for acetylene on the high-pressure side between the cylinders and the regulator shall be steel. Copper or copper alloys containing more than 65% copper are not to be used in acetylene piping (high or low pressure). Materials for oxygen on the high- pressure side shall be steel or copper. All pipes, both high- and low-pressure sides, shall be seamless.

8.1.3.1(c) Design pressure Pipes, pipe fittings and valves on the oxygen high-pressure side shall be designed for not less than 207 bar (211 kgf/cm^2, 3000 psi). Pipes used on the low-pressure side shall be at least of standard wall thickness.

8.1.3.1(d) Pipe joints. All pipe joints outside of the storage room or open storage area shall be welded.

8.1.3.1(e) Flexible hoses - Flexible hoses used to connect oxygen or acetylene gas cylinders to a fixed piping system or manifold are to conform with an acceptable standard and be suitable for the intended pressure and service. Further, the internal surface of a hose used to connect an acetylene tank shall be of a material that is resistant to acetone and dimethylformamide decomposition*.

Where a flexible hose is connected from an oxygen cylinder to the piping system or manifold directly (i.e., no intervening pressure regulator), the internal liner of the oxygen hose shall be of a material that has an auto ignition temperature of not less than 400°C (752°F) in oxygen*.

* *Note:* Criteria based on ISO 14113:1997 Gas welding equipment – rubber and plastic hoses assembled for compressed or liquefied gases up to a maximum design pressure of 450 bar.

8.1.3.2 Pressure Relief Devices

Pressure relief devices shall be provided in the gas piping if the maximum design pressure of the piping system can be exceeded. These devices shall be set to discharge at not more than the maximum design pressure of the piping system to a location in the weather, remote from sources of vapor ignition or openings to spaces or tanks. The area within 3 m (10 ft) of the pressure relief device discharge outlet shall be regarded as a hazardous area. The pressure relief devices may be either a relief valve or a rupture disc.

8.1.3.3 System Arrangements

Where two or more gas cylinders are connected to a manifold, high pressure piping between each gas cylinder and the manifold shall be fitted with a non-return valve. The piping shall not to run through unventilated spaces or accommodation spaces. Outlet stations shall be fitted with shut-off valves. Outlet stations shall be provided with appropriate protective devices to prevent back flow of gas and the passage of flame into the supply lines.

8.1.3.4 Gas Cylinders

Gas cylinders shall be designed, constructed and certified in accordance with the provisions of Part 5A Chapter 10,Sect-1[1.6.4] Each cylinder shall be fitted with a suitable pressure relief device such as a fusible plug or a rupture disc.

The area within 3 m (10 ft) of the pressure relief device discharge outlet shall be regarded as a hazardous area.

8.1.4 Testing

Piping on the oxygen high-pressure side shall be tested before installation to at least 207 bar (211 kgf/cm^2, 3000 psi) and the piping on the acetylene high-pressure side shall be tested in accordance with Chapter 4 Sect 2

The whole system shall be leak-tested with nitrogen or a suitable inert gas after installation. Care shall be taken to cleanse the piping with suitable medium to remove oil, grease and dirt and to blow-through with oil-free nitrogen or other suitable medium before putting the system in service. The system shall be operationally tested in the presence of the Surveyor under working conditions after installation.

8.2 Fuel Storage and Refueling Systems for Helicopter Facilities

8.2.1 Fuels with Flash Point Above 60°C (140°F)

When fixed helicopter fuel storage and pumping systems are provided and the flash point of the fuel is above 60°C (140°F),the installation to comply with Chapter 4 Sect 4[4.1],[4.2] and Chapter 4Sect [8.2.2.5]

8.2.2 Fuels with Flash Point at or Below 60°C (140°F) – Installations on an Open Deck

8.2.2.1 General

The designated fuel storage and refueling areas shall be suitably isolated from areas which contain a source of vapor ignition, escape routes and embarkation stations, and are not to be located on landing areas. The storage and refueling areas shall be permanently marked as an area where smoking and open flames are not permitted.

8.2.2.2 Tanks

Fixed fuel storage tanks shall be of metal construction. Mounting, securing arrangements and electrical bonding of the storage tank and refueling system shall be approved.

8.2.2.3 Vents and Sounding

Fuel storage tank venting and sounding to comply with Chapter 4,Sect 3[3.5.3],[3.5.4] [3.7]Sect 4[4.4.3]

8.2.2.4 Tank Valves

Fuel storage tank outlet valves shall be provided with a means of remote closure. Means are also to be provided for remote shutdown of the refueling pumps.

8.2.2.5 Spill Containment

To contain spillage and retain fire extinguishing agents, a coaming of at least 150 mm (6 in.) in height shall be provided. The coaming is to surround the fuel storage area, which consists of the fuel tank, associated piping and any pumping unit adjacent to the storage tank. Where the pumping unit or any other unit such as dispenser/coalescer unit is remote from the tank, a separate coaming shall be provided around each unit.

Drainage shall be provided for the area enclosed by the coaming, complying with the following:

i) The area within the coaming shall be sloped toward the drain line.

ii) Drainage from the area within the coaming shall be led through a valve designed for selective output (e.g., 3-way valve) either to a holding tank (for draining oil) or discharged overboard (for draining water),no other valve is permitted.

iii) The cross sectional area of the drain line from the fuel tank coaming shall be at least twice that of the fuel storage tank outlet connection.

Fuel tank coamings not provided with drainage arrangements in accordance with the above shall be sized to contain the full volume of the fuel storage tank plus 150 mm

(6 in.) of foam.

8.2.2.6 Electrical Equipment

All electrical equipment installed within 3 meters (10 ft) of either the tank vent outlet or the pumping/refueling equipment shall be of a certified safe type. Electrical equipment installed may be any of the types indicated in Chapter 6 Sect 3[3.6.1.1] and shall be IEC Publication 60079-20-1 group IIA class T3.

8.2.3 Fuels with Flash Points at or Below 60°C (140°F) – Installation within Enclosed Spaces

8.2.3.1 Independent Tanks Independent fuel tanks may be installed in the same compartment as the refueling system. The tank, vents, means of sounding and valves are to conform to Sect [8.2.2.3] above

8.2.3.2 Integral Tanks

For integral tanks sounding,Venting to comply Chapter 4Sect 8[8.2.2.3],Sect 3[3.6] Chapter 4[4.2.4] .Cofferdams shall be provided .

8.2.3.3 Access Arrangements

The access to the fuel storage and refueling compartment shall be from the open deck by means of a trunk, if necessary. The compartment shall be bounded by gas tight bulkheads/decks and there shall be no direct access from any other compartment to the fuel storage and refueling compartment or access trunk.

8.2.3.4 Electrical Equipment

Electrical equipment installed in the refueling pump room and the space in which an independent helicopter fuel tank storage is located shall be of a certified safe type. All electrical equipment installed within three (3) meters (10 ft) of the tank vent outlet shall be of a certified safe type. Electrical equipment installed may be any of the types indicated in Chapter 6 Sect 3[3.6.1.1] and shall be IEC Publication 60079-20-1 group IIA class T3.

8.2.3.5 Pumps.

The refueling pump is to integrate a device that will prevent over-pressurization of the delivery hose or of the filling hose. A relief valve, where fitted, is to discharge either to the suction side of the pumps or to the storage tanks. Means for remotely stopping the refueling pumps from a position not likely to be cut off if there is a fire in the fuel storage and refueling area are to be provided

8.2.3.6 Piping

Helicopter refueling piping systems are to comply with Chapter 4,Sect 7[7.2.1]

8.2.3.7 Bilge/Drainage System

Provision shall be made for drainage of the refueling pump room and cofferdams. A separate bilge pump, ejector or a bilge suction from a refueling pump may be provided for this purpose.

8.2.3.8 Ventilation

Systems for the refueling pump room and the space in which an independent helicopter fuel tank is located are comply with Chapter 6,Sect 6[6.1.7.1]

8.3 Liquefied Petroleum Gases

8.3.1 General

Liquefied petroleum gas systems shall be of the vapor withdrawal type only. Cylinders designed to admit the liquid phase of the gas into any other part of the system are prohibited. All component parts of the system, except cylinders, appliances and low pressure tubing, shall be designed to withstand a pressure of 34 bar (35 kgf/cm^2, 500 psi) without rupture.

8.3.2 Storage Cylinders

Cylinders for the storage of liquefied petroleum gases shall be designed and constructed in accordance with a recognized pressure vessel standard.

8.3.3 Installation and Testing

Where liquefied petroleum gases are used, the installation and testing is to comply with a recognized standard.

8.4 Chemical and Gas Carriers

Where vessels are intended to carry hazardous cargoes such as chemicals or liquefied gases, Part 7B, Chapters 8 and 9 of the *INTLREG Rules for Building and Classing Steel Vessels* are applicable.

8.5 Offshore Support Vessels

Where it is intended to carry limited amounts of hazardous and noxious liquid substances in bulk on offshore support vessels, the arrangement is to comply with Part 7B of relevant section of the INTLREG *Rules for Building and Classing Offshore Support Vessels (OSV Rules)*.

8.6 Ammonia System

8.6.1 Compartmentation

Ammonia handling machinery shall be installed in a dedicated compartment with at least two access doors. The doors shall be of the self-closing, gastight type with no hold-back arrangements.

8.6.2 Safety Measures

The following safety measures shall be provided for compartments containing ammonia handling machinery, including process vessels.

i) An independent mechanical negative ventilation system capable of providing at least 30 air changes per hour based on the gross volume of the space
ii) A sprinkler system with control outside of the compartment
iii) A fixed ammonia detector system with alarm inside and outside of the compartment
iv) Water screen devices operable from outside of the compartment, for all access doors.
v) An independent bilge system located within these compartments

8.6.3 Ammonia Piping

Ammonia piping shall not to pass through accommodation spaces.

8.7 Liquid Mud Cargo Tanks

Liquid mud cargo tanks shall be provided with vent pipes complying with Part 5A-9-5. In order to prevent overpressure or under pressure in the event of overflow into the vent pipe or clogging of the flame screen in the case of oil based mud, vents for liquid mud tanks are to also be provided with a suitable burst disc(s) rated below the mud tank design pressure. Spare burst discs shall be carried on board so that damage burst disc can be replaced. Suitable means of gauging the mud tanks such

as a tank ullage method or level indicating devices may be fitted in lieu of sounding pipe per Chapter 4 Sect 3[3.7.2]

CHAPTER 5 FIRE EXTINGUISHING SYSTEMS

CONTENTS

SECTION 1 ALL VESSELS

Contents

1.1 General

1.1.1 Classification Requirements

The following are the minimum classification requirements for all self-propelled oceangoing vessels under 100 meters (328ft) in length. For vessels classed with restricted service, the requirements may be modified and the proposed fire extinguishing arrangements shall be submitted for consideration.

1.1.2 Governmental Authority

Attention is directed to the appropriate governmental authority. In each case, there may be additional requirements depending on the gross tonnage, length, type and intended service of the vessel, as well as other particulars and details. Consideration will be given to fire extinguishing systems which comply with the published requirements of the governmental authority of the country in which the vessel shall be registered.

1.1.3 Automated Propulsion Machinery Spaces

Where automatic controls for propulsion machinery spaces are installed and it is intended that the propulsion machinery spaces are either not continuously manned at sea or only one person is required on watch, the requirements of Part 6 Chapter 8 shall be met.

1.1.4 Plans and Specifications

The plans together with supporting data and particulars listed in Chapter 1Sect 1[1.4] shall be submitted for review.

1.1.5 Fire Control Plans

1.1.5.1 Required Information

Fire control plans shall be general arrangement plans showing for each deck the provision, location, controls and particulars, as applicable, of fixed fire detection, alarm and extinguishing systems, portable fire fighting appliances and equipment, controls for shutdowns of the ventilation system, fuel oil pumps and valves, along with details of the means provided for the closing of openings, and locations of accesses to critical spaces (such as fire control stations, Category A machinery spaces, etc.). For vessels where structural fire protection is required by the Rules, locations and type of fire retarding bulkheads shall be specified on the plan.

1.1.5.2 Plan Location

The fire control plans shall be conspicuously posted in the vessel for the guidance of the crew.

1.1.6 Additional Fixed Fire Fighting Systems

Where a fixed fire extinguishing system not required by Chapter 5 Sect 2 and Chapter 5 Sect 3 is installed, such system is to meet the applicable requirements of Chapter 5 Sect 2[2.6] and shall be submitted for approval.

1.2 Fire Pumps, Fire Main, Hydrants and Hoses

1.2.1 Materials

Materials readily rendered ineffective by heat are not to be used for fire mains unless adequately protected. In order to be considered not “readily rendered ineffective by heat”, a component shall be certified as having passed an applicable, recognized fire test, or the material is to have a melting temperature higher than the test temperature specified in an applicable fire test.

1.2.2 Fire Pumps

1.2.2.1 Number of Pumps

All vessels are to have at least two fire pumps. Refer to Chapter 5 Sect 2[2.3] for vessels of 500 gross tons or over, or Chapter 5 Sect 3[3.1] for vessels under 500 gross tons.

1.2.2.2 Type of Pumps

Sanitary, ballast, bilge or general service pumps may be accepted as fire pumps, provided that they are not normally used for pumping oil. If the pumps are subject to occasional duty for the transfer or pumping of fuel oil, changeover arrangements that prevent operation for fire fighting when configured for fuel transfer shall be fitted.

1.2.2.3 Pressure

Power-driven fire pumps are to have sufficient pressure to produce 12 m (40 ft) jet throw through any two adjacent hydrants located in accordance with Chapter 5 Sect 1[1.2.4.1] and Chapter 5 Sect 2[2.3.1] , Chapter 5 Sect 3[3.1]

1.2.2.4 Relief Valves

In conjunction with all fire pumps, relief valves shall be provided if the pumps are capable of developing a pressure exceeding the design pressure of the water service pipes, hydrants and hoses. These valves shall be so placed and adjusted as to prevent excessive pressure in any part of the fire main system. In general, the relief valve shall be set to relieve at no greater than 1.7 bar (1.75 kgf/cm^2, 25 psi) in excess of the pump pressure necessary to maintain the requirements of pressure .Refer Sect1[1.2.2.3] above

1.2.3 Fire Main

1.2.3.1 Size

Refer to Chapter 5,Sect 2[2.2] for vessels of 500 gross tons and over. For vessels under 500 gross tons, the diameter of the fire main and water service pipes shall be sufficient for the effective distribution of the maximum required discharge from the pump(s). Refer to Chapter 5 Sect 1[1.2.2] and Table 5.3.1.

1.2.3.2 Cocks or Valve

A valve shall be fitted to serve each fire hose so that any fire hose may be removed while the fire pumps are at work.

1.2.3.3 Cold Weather Protection

Fire main systems shall be provided with drains, circulation loops or other means for cold weather protection.

1.2.4 Hydrants

1.2.4.1 Number and Position of Hydrants

The number and position of the hydrants shall be such that at least two jets of water not emanating from the same hydrant, one of which shall be from a single length of hose, may reach any part of the vessel normally accessible to the passengers or crew while the vessel is being navigated. In addition, the arrangements shall be such that at least two jets of water can reach any part of any cargo space when empty.

1.2.4.2 Materials

Materials readily rendered ineffective by heat are not be used for fire protection systems unless adequately protected. Refer Chapter 5 Sect 1[1.2.1]

1.2.4.3 Installation

The pipes and hydrants shall be so placed that the fire hoses may be easily coupled to them. In vessels where deck cargo may be carried, the positions of the hydrants shall be such that they are always readily accessible and the pipes shall be arranged to avoid risk of damage by such cargo.

1.2.5 Hoses

1.2.5.1 General

Fire hose shall be approved by the INTLREG, of nonperishable material to a recognized standard. The hoses shall be sufficient in length to project a jet of water to any of the spaces in which they may be required to be used.

Fire hoses are to have a length of at least 10 m (33 ft), but not more than:

1.2.5.2 15 m (50 ft) in machinery spaces;

1.2.5.3 20 m (66 ft) in other spaces and open decks; and

1.2.5.4 25 m (82 ft) for open deck on vessels with a maximum breath in excess of 30 m (98 ft)

Each hose shall be provided with a nozzle and the necessary couplings. Fire hoses, together with any necessary fittings and tools, shall be kept ready for use in conspicuous positions near the hydrants.

1.2.5.5 Diameter
Ships shall be provided with fire hoses, the number and diameter of which shall be to the satisfaction of the INTLREG

1.2.5.6 Number of Fire Hoses
In vessels of 1,000 gross tonnage and upwards, the number of fire hoses to be provided shall be at least one for each 30 m (100 ft) length of the vessel and one spare, but in no case less than five in all. This number does not include any hoses required in any engine or boiler room.

In vessels of less than 1,000 gross tonnage, the number of fire hoses to be provided shall be at least one for each 30 m (100 ft) length of the vessel and one spare. However, the number of hoses shall be in no case less than three.

Unless one hose and nozzle is provided for each hydrant in the vessel, there shall be complete interchangeability of hose couplings and nozzles.

1.2.6 Nozzles

1.2.6.1 Size

Standard nozzle sizes shall be 12 mm (0.5 in.), 16 mm (0.625 in.) and 19 mm (0.75 in.), or as near thereto as possible. It is at the discretion of the INTLREG to permit larger diameter nozzles.

1.2.6.2 Type

All nozzles shall be of an approved dual-purpose type (i.e.spray and jet type) incorporating a shut-off.

1.3 Means for Closing of Openings, Stopping of Machinery and Oil Containment

1.3.1 Ventilation Fans and Openings

Means shall be provided for stopping ventilation fans serving machinery and cargo spaces, and for closing all doorways, ventilators and other openings to such spaces. These means shall be capable of being operated from outside such spaces in case of fire. Refer Chapter 6 Sect 2[2.10.1.1]

1.3.2 Other Auxiliaries

Machinery driving forced- and induced-draft fans, oil-fuel transfer pumps, oil-fuel unit pumps and other similar fuel pumps, fired equipment such as an incinerator, lubricating oil service pumps, thermal oil circulating pumps and oil separators (purifiers) shall be fitted with remote shutdowns situated outside of the spaces concerned so that they may be stopped in the event of a fire arising in the space. This need not apply to oily water separators. Refer Chapter 6 Sect 2[2.10.1.2]

In addition to the remote shutdowns required above, a means to shut down the equipment shall be provided within the space itself.

1.3.3 Oil Tank Suction Pipes

Except for small independent tanks having a capacity of less than 500 liters (132 gal.), every oil-suction pipe from a storage, settling, daily service tank or lube oil tank situated above the double bottom shall be fitted with a valve capable of being closed in the event of a fire from outside of the space where such tanks are located. In the special case of deep tanks situated in any shaft or pipe tunnel, control may be effected by means of an additional valve on the pipe line outside of the tunnel. Refer Chapter 4 Sect 4[4.2.4]

Where inadvert valve closure could result in damage to the running machinery due to lack of lubricating oil, a valve shall be fitted on the lubricating oil tank, but remote control of the valve from outside of the space shall not required. Refer Chapter 4 Sect 4[4.1.1]

1.4 Helicopter Facilities

1.4.1 Application

For each helicopter deck on board a vessel designated for helicopter operations, fire fighting system and equipment complying with Chapter 5 Sect 1[1.4.2.2] and [1.4.2.3] as applicable , shall be provided.

Helicopter deck (helideck) is a purpose-built helicopter landing area, on a vessel including all structure, fire fighting appliances and other equipment necessary for the safe operation of helicopters, but not those areas for occasional or emergency helicopter operations (e.g., circle H marked on hatch covers for drop- off/pickup of pilot). Helicopter facility is a helideck including any refueling and hangar facility.

1.4.2 Provisions for Helicopter Deck

1.4.2.1 Hoses and Nozzles

At least two combination solid stream and water spray nozzles and hoses sufficient in length to reach any part of the helicopter deck shall be provided.

1.4.2.2 Portable Extinguishers

The helicopter deck shall be protected by at least two dry powder extinguishers of a total capacity of not less than 45 kg (100 lb).

1.4.2.3 Back-up System

A back-up fire fighting system shall be provided consisting of CO_2 extinguishers of a total capacity of not less than 18 kg (40 lb) or equivalent, one of these extinguishers being equipped so as to enable it to reach the engine area of any helicopter using the helicopter deck. The back-up system shall be located so that the equipment would not be vulnerable to the same damage as the dry powder extinguisher required by Chapter 5 Sect 1[1.4.2.2]

1.4.2.4 Fixed Foam System

A suitable fixed foam fire extinguishing system, consisting of monitors or hose streams or both, shall be installed to protect the helicopter landing area in all weather conditions in which helicopters can operate. The system shall be capable of delivering foam solution at a discharge rate in accordance with the following table for at least five minutes. The operation of the foam system shall not to interfere with the simultaneous operation of the fire main.

Category	*Helicopter Overall Length, L_H*	*Discharge Rate*	
		Liters/min.	*gpm*
H1	L_H < 15 m (49 ft)	250	66
H2	15 m (49 ft) ≤ L_H < 24 m (79 ft)	500	132
H3	24 m (79 ft) ≤ L_H < 35 m (115 ft)	800	211

The foam agent is to meet the performance standards for Level B foam in the International Civil Aviation Organization's Airport Services Manual (Part 1 Chapter 8, Paragraph 8.1.5, Table 8-1) and be suitable for use with sea water

1.4.2.5 Fireman's Outfits

In addition to the fireman's outfits required in Chapter 5 Sect 2[2.8], two additional sets of fireman's outfits shall be provided and stored near the helicopter deck.

1.4.2.6 Other Equipment

The following equipment shall be provided near the helicopter deck and shall be stored in a manner that provides for immediate use and protection from the elements:

- Adjustable wrench
- Fire resistant blanket
- Bolt cutters with arm length of 60 cm (24 in.) or more
- Grab hook or salving hook
- Heavy duty hack saw, complete with six spare blades
- Ladder
- Lifeline of 5 mm ($^3/_{16}$ in.) diameter × 15 m (50 ft) length
- Side cutting pliers
- Set of assorted screw drivers
- Harness knife complete with sheath

1.4.3 Provisions for Enclosed Helicopter Facilities

Hangars, refueling and maintenance facilities shall be treated as machinery space of category A with regard to structural fire protection, fixed fire-extinguishing system and fire detection system requirements. Refer Chapter 5 Sect 2[2.6] and Sect 2[2.12]

1.4.4 Operation Manual

Each helicopter facility is to have an operation manual, including a description and a checklist of safety precautions, procedures and equipment requirements. This manual may be part of the vessel's emergency response procedures.

1.5 Portable Extinguishers

Portable extinguishers shall be provided in the quantities and locations indicated in Table 5.1.1 and Table 5.1.2

1.6 Paint and Flammable Liquid Lockers

Paint and flammable liquid lockers or any similar service spaces used for the storage of flammable liquids (such as solvents, adhesives, lubricants etc.) shall be protected by a fire extinguishing arrangement enabling the crew to extinguish a fire without entering the space. Unless required or permitted otherwise by the flag Administration, one of the following systems shall be provided:

1.6.1 Lockers of 4 m^2 (43 ft^2) or More Floor Area and Lockers with Access to Accommodation Spaces

Paint lockers and flammable liquid lockers of floor area 4 m^2 (43 ft^2) or more and also such lockers of any floor area with access to accommodation spaces shall be provided with one of the fixed fire extinguishing systems specified below:

i) CO_2 system, designed for 40 % of the gross volume of the space.

ii) Dry powder system, designed for at least 0.5 kg/m^3 (0.03 lb/ft^3).

iii) Water spraying system, designed for 5 liters/m^2/minute (0.12 gpm/ft^2). The water spraying system may be connected to the vessel's fire main system, in which case, the fire pump capacity shall be sufficient for simultaneous operation of the fire main system, as required in Chapter 5 Sect 2[2.3.1] and the water spray system. Precautions shall be taken to prevent the nozzles from being clogged by impurities in the water or corrosion of piping, nozzles, valves and pump.

iv) Systems or arrangements other than those referenced above may be also considered, provided they are not less effective.

1.6.2 Lockers of Less Than 4 m^2 (43 ft^2) Floor Area Having no Access to Accommodation Spaces.

For paint lockers and flammable liquid lockers of floor area less than 4 m^2 (43 ft^2) having no access to accommodation spaces, portable fire extinguisher(s) sized in accordance with Sect 1[1.6.1] (i) and which can be discharged through a port in the boundary of the lockers may be accepted. The required portable fire extinguishers shall be stowed adjacent to the port. Alternatively, a port or hose connection may be provided for this purpose to facilitate the use of water from the fire main.

TABLE 5.1.1

Classification of Portable and Semi-portable Extinguishers

Fire extinguishers are designated by type as follows: A, for fires in combustible materials such as wood; B, for fires in flammable liquids and greases; C, for fires in electrical equipment.

Fire extinguishers are designated by size where I is the smallest. Sizes I and II are hand portable extinguishers and sizes III and V are semi-portable extinguishers.

Classification		*Water*	*Foam*	*Carbon Dioxide kg (lb)*	*Dry Chemical kg (lb)*
Type	*Size*	*liters (US gallons)*	*liters (US gallons)*		
A	II	9 (2.5)	9 (2.5)	—	5 (11) (1)
B	II	—	9 (2.5)	5 (11)	5 (11)
B	III	—	45 (12)	15.8 (35)	9 (20)
B	V	—	152 (40)	45 (100) (2)	22.5 (50) (2)
C	I	—	—	1.8 (4)	0.9 (2)
C	II	—	—	5 (11)	5 (11)

Notes:

1 Must be specifically approved as Type A, B, C extinguisher

2 For outside use, double the amount to be carried.

TABLE- 5.1.2

Portable and Semi-portable Extinguishers

Space	Classification	Quantity and Location (5)
Safety Areas		
Communicating corridors	A-II	1 in each main corridor not more than 46 m (150 ft) apart. (May be located in stairways.)
Pilot house	C-II	2 in vicinity of exit. Refer Notes 4 and 6.
Radio room	C-II	1 in vicinity of exit. Refer Note 4.
Accommodations		
Sleeping Accommodations	A-II	1 in each sleeping accommodation space. (Where occupied by more than four persons.)
Service Spaces		
Galleys	B-II or C-II	1 for each 230 m2 (2500 ft2) or fraction thereof for hazards involved.
Storerooms	A-II	1 for each 230m2 (2500 ft2) or fraction thereof located in vicinity of exits, either inside or outside of spaces. Refer Note 4.
Workshops	A-II	1 outside the space in vicinity of exit. Refer Note 4.
Machinery Spaces		
Internal combustion or gas turbine-engines	B-II and B-III	1 for each 746 kW (1000 hp), but not less than 2 nor more than 6. Refer Note 1. 1 required. Refer Note 3.
Electric motors or generators of the open type	C-II	1 for each motor or generator unit. Refer Note 2.

Notes:

1 When installation is on weather deck or open to atmosphere at all times, one B-II for every three engines is allowable.

2 Small electrical appliances, such as fans, etc., are not to be counted or used as basis for determining number of extinguishers required.

3 Not required on vessels of less than 500 gross tons.

4 Vicinity is intended to mean within 1 m (3 ft).

5 For vessels of 1000 gross tons and above, at least five extinguishers shall be provided for accommodation spaces, service spaces, spaces where the vessel's radio, main navigation equipment or emergency source of power is located, and locations where the fire recording or fire control equipment is located.

6 For cargo ships less than 500 gross tons, "C-I" portable extinguishers may be used.

SECTION 2 REQUIREMENTS FOR VESSELS 500 GROSS TONS AND OVER

Contents

2.1 Fire Safety Measures

The applicable requirements of Part 5A- Chapter 13-Sect1[1.1] shall be complied with.

2.2 Size of Fire Main

The diameter of the fire main and water service pipes shall be sufficient for the effective distribution of the maximum required discharge from two fire pumps operating simultaneously, except that in the case of cargo ships the diameter need only be sufficient for the discharge of 140 m^3/hr (616 gpm).

2.3 Main and Emergency Fire Pumps

2.3.1 Main Fire Pumps

2.3.1.1 Number of Pumps

For vessels of 1000 gross tons and above, the pumps shall be independently power-driven. For vessels less than 1000 gross tons, only one of the pumps need be independently power-driven and one of the pumps may be attached to the propulsion unit.

2.3.1.2 Total Pump Capacity

The fire pumps required by Sect 2[2.3.1.1] above shall be capable of delivering for firefighting purposes a quantity of water, at the appropriate pressure prescribed, not less than four-thirds of the quantity required to be dealt with by each of the independent bilge pumps when employed on bilge pumping, using in all cases *L* = length of vessel, as defined in Part 3- Chapter 1-Sect 2[2.1], except that the total required capacity of the fire pumps need not exceed 180 m^3/hr (792 gpm).

2.3.1.3 Individual Pump Capacity

Each of the fire pumps required by Sect 2[2.3.1.1] is to have a capacity of not less than 40% of the total required capacity, but not less than 25 m^3/hr (110 gpm), and in any event shall be capable of delivering at least the two required jets of water. These pumps shall be capable of supplying the water under the required conditions. Where more pumps than required are installed, their capacity will be subject to special consideration.

2.3.1.4 Pressure

For vessels 1000 gross tons and over with the two power-driven pumps simultaneously delivering through the nozzles specified in Chapter 5 Sect 1[1.2.6] the quantity of water specified in Chapter 5 Sect 1[1.2.3.1] through any adjacent hydrants, a pressure of 2.5 bar (2.6 kgf/cm^2, 37 psi) shall be maintained at all hydrants.

For vessels less than 1000 gross tons, the power-driven fire pumps are to have sufficient pressure to produce 12 m (40 ft) jet throw through any two adjacent hydrants located in accordance with Chapter 5 Sect 1[1.2.3.1]

2.3.1.5 Arrangement

Unless an emergency fire pump complying with Chapter 5 Sect 2[2.3.2] is provided, the two main fire pumps, including their power source, fuel supply, electric cables, and lighting and ventilation for the spaces in which they are located, shall be in separate compartments so that a fire in any one compartment will not render both main pumps inoperable. Only one common boundary is allowed between the compartments, in which case, the single common boundary shall be at least to A-0 standard.

No direct access is allowed between the compartments except that where this is impracticable, an access meeting the requirements in Sect 2[2.3.1.6] below may be considered.

2.3.1.6 Alternative Arrangement

Where it is impracticable to do otherwise, a direct access between the compartments containing the main fire pumps may be considered, provided:

i) A watertight door capable of being operated locally from both sides of the bulkhead, and from a safe and accessible location outside of these spaces is provided. The means for the latter operation is expected to be available in the event of fire in these spaces; or

ii) An air lock consisting of two gastight steel doors. The doors shall be self-closing without any hold back arrangements

iii) In addition to the arrangements specified in Sect 2[2.3.1.6] i) or Sect 2[2.3.1.6] ii) above, a second protected means of access shall be provided to the space containing the fire pumps.

2.3.1.7 Isolation

Isolating valves and other arrangements, as necessary, shall be provided so that if a fire pump and its associated piping within its compartment are rendered inoperable, the fire main can be pressurized with a fire pump located in another compartment.

2.3.2 Emergency Fire Pumps

2.3.2.1 When Required

If a fire in any one compartment could put all main pumps out of action , an independently power-driven and self-priming emergency fire pump complying with this paragraph shall be provided.

2.3.2.2 Arrangement

An emergency fire pump system, including power source, fuel supply, electric cables, and lighting, as well as lighting and ventilation for the emergency fire pump space, shall be in a separate compartment than the main fire pumps so that a fire in any one compartment will not render both the main and the emergency fire pumps inoperable.

Direct access is not permitted between the machinery space and the space consisting of the emergency fire pump and its source of power. When this is not possible, an arrangement might be accepted by the INTLREG where the access is by means of an airlock with the door of the machinery space being of "A-6 0" class standard and the other door being at least steel, both reasonably gastight, self-closing and without any hold-back arrangements. Alternatively, the access may be through a watertight door which can be operated from a space remote from the machinery space and the space containing the emergency fire pump and unlikely to be cut off in the event of fire in those spaces. In such cases, a second means of access to the space containing the emergency fire pump and its source of power shall be provided.

2.3.2.3 Capacity

The emergency fire pump shall be capable of supplying at least two jets of water required by Chapter 5 Sect 1[1.2.3.1]using the available hydrants, hoses and nozzles, and is to have a capacity of at least 40% of the total capacity of the fire pumps required

by Ch 5 Sect 2[2.3.1.2] or 25 m^3/hr (110 gpm), whichever is greater.

When the pump is delivering the quantity of water, as above, the pressure at the hydrant shall be not less than the pressure given in Chapter 5 Sect 2[2.3.1.4]

In addition, the emergency fire pump is also to be capable of simultaneously supplying the amount of water needed for any fixed extinguishing system protecting the space containing the main pumps.

2.3.2.4 Starting

Internal combustion engines larger than 15 kW (20 hp) shall be provided with power starting systems having a capacity sufficient for at least six starts within 30 minutes, including at least two within the first ten minutes. For engines of 15 kW (20 hp) and smaller, manual means of starting is sufficient.

Any internal combustion engine driving an emergency fire pump shall be capable of readily being started in its cold condition down to a temperature of 0°C (32°F). If this is impracticable or if lower temperatures are likely to be encountered, consideration shall be given to the provision and maintenance of heating arrangements.

2.3.2.5 Fuel Supply

Any service fuel tank is to contain sufficient fuel to enable the pump to run on full load for at least three hours and sufficient reserves of fue5l shall be available outside of the main machinery space to enable the pump to be run on full load for an additional 15 hours.

2.3.2.6 Suction

The total suction head and the net positive suction head of the pump shall be such that the requirements of Chapter 5 Sect 2[2.3.2.3] and Sect 2[2.3.1.4] will be satisfied under all conditions of list, trim, roll and pitch likely to be encountered in service. The sea valve shall be operable from a position near the pump or locked in the open position (provided possible flooding can be detected).

2.4 International Shore Connection

At least one international shore connection, as shown in Figure 5.2.1 below , shall be provided and kept aboard the vessel with gasket, bolts and eight washers. Facilities shall be available enabling such a connection to be used on either side of the vessel.

Fig 5.2.1 —international standard shore connection

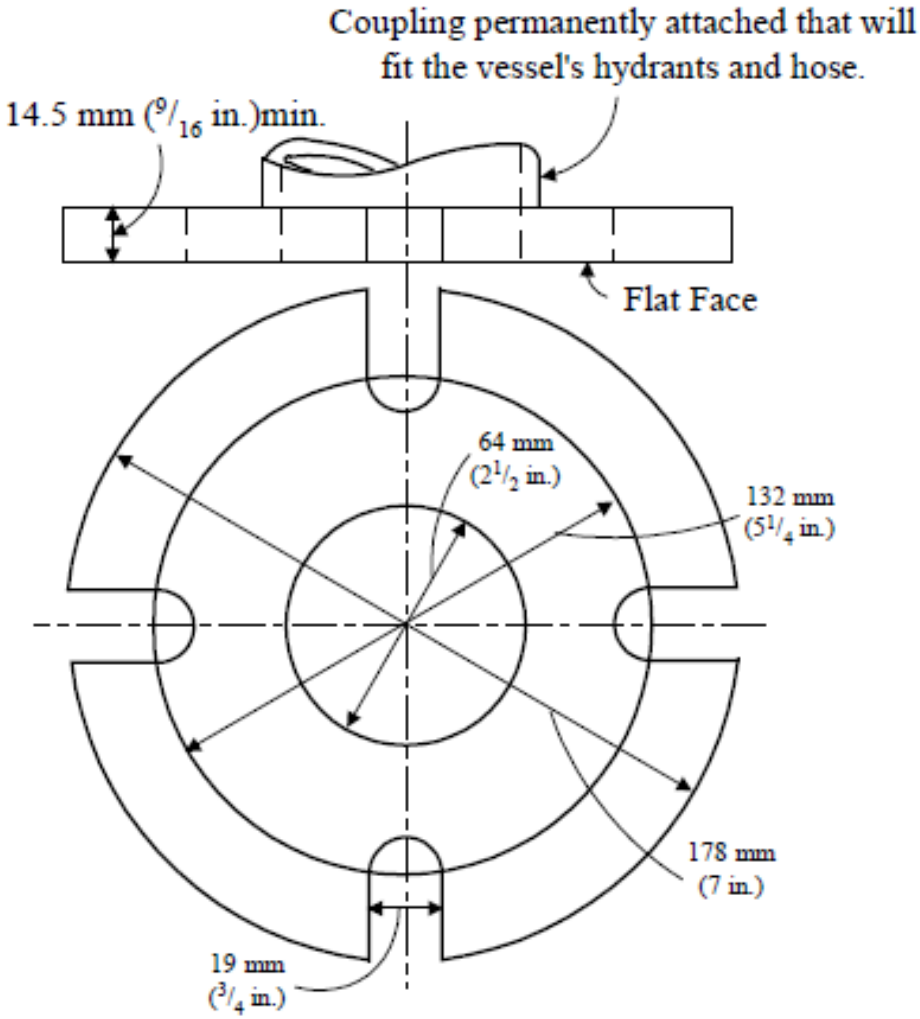

Bolts: 4, each of 16 mm ($^5/_8$ in.) diameter, 50 mm (2 in.) in length
Flange Surface: Flat face
Material: Any suited for 10 bar (10.5 kgf/cm^2, 150 psi)
Gasket: Any suited for 10 bar (10.5 kgf/cm^2, 150 psi) service

2.5 Machinery Spaces

Category A machinery spaces shall be protected by a fixed fire extinguishing system complying with Part Chapter 5 Sect 2[2.6]

2.5.1 Fixed Local Application Firefighting Systems

For cargo vessels of 2000 gross tonnage and above, the machinery spaces of category A above 500 m^3 (17,657 ft^3) in volume, in addition to the fixed fire extinguishing system required in Chapter 5 Sect 2[2.6] shall be protected by an approved type of fixed water-based or equivalent local application firefighting system complying with the provisions of the IMO Guidelines for the Approval of Fixed Water-based Local Application Firefighting System for Use in Category A Machinery Spaces, MSC/Circ. 1387. In the case of periodically unattended machinery spaces, the fire fighting system is to have both automatic and manual release

capabilities. In case of continuously manned machinery spaces, the fire fighting system is only required to have a manual release capability. The fixed local fire fighting systems are to protect areas such as the following without the necessity of engine shutdown, personnel evacuation or sealing the spaces:

i) The fire hazard portion of internal combustion machinery;

ii) Purifiers for heated fuel oil, Refer Section 2[2.5.2] below

iii) The fire hazard portions of incinerators; and

iv) Boiler front.

Activation of any local application system shall give a visual and distinct audible alarm in the protected space and at continuously manned stations. The alarm is to indicate the specific system activated. The system alarm requirements described within this paragraph are in addition to, and not a substitute for, the detection and fire alarm system required. A bridge alarm shall be provided with a visual notification when the system has been deactivated or placed in manual mode.

2.5.2 Segregation of Purifiers for Heated Fuel Oil

Fuel oil purifiers for heated oil shall be placed in separate room or rooms enclosed by steel bulkheads extending from deck to deck and provided with self-closing doors. In addition, the room shall be provided with the following:

i) Independent mechanical ventilation or ventilation arrangement that can be isolated from the machinery space ventilation, of the suction type.

ii) Fire detection system.

iii) Fixed fire extinguishing system capable of activation from outside of the room. The extinguishing system shall be dedicated to the room, but may be a part of the fixed fire extinguishing system for the machinery space.

However, for the protection of purifiers on cargo vessels of 2000 gross tonnage and above located within a machinery space of category A above 500 m^3 (17,657 ft^3) in volume, the above referenced fixed, dedicated system shall be a fixed, water-based or equivalent, local application fire extinguishing system complying with the provisions Chapter 5 Sect 2[2.5.1] above.. The system shall be capable of activation from outside of the purifier room. In addition, protection shall be provided by the fixed fire extinguishing system covering the Category A machinery space in which the purifier room is located.

iv) Means of closing ventilation openings and stopping the ventilation fans, purifiers, purifier-feed pumps, etc., from a position close to where the fire extinguishing system is activated

If it is impracticable to locate the fuel oil purifiers in a separate room, special consideration will be given with regard to location, containment of possible leakage, shielding and ventilation. In such cases, a local, fixed water-based fire extinguishing system complying with the provisions of Chapter 5 Sect 2[2.5.1] above.. shall be provided. Where, due to the limited size of the category A machinery space, a local fixed water-based fire-extinguishing system shall not provided, then an alternative type of local, dedicated, fixed fire extinguishing system shall be provided for the protection of the purifiers. In either case, the local fire extinguishing system is to activate automatically or manually from the centralized control station or other suitable location. If automatic release is provided, additional manual release is also to be arranged.

2.5.3 **Spaces Containing Equipment with Oil Filled Capacitors**

Spaces containing equipment with flammable oil filled capacitors shall be provided with any one of the following fixed fire extinguishing systems:

i) A gas system complying with the provisions of Chapter 5 Sect 2[2.6.2]; or

ii) Other approved fire extinguishing system suitable for the equipment voltage hazard.

2.6 Fixed Fire Extinguishing Systems

2.6.1 Gas Smothering

2.6.1.1 Storage

Where the gas smothering medium is stored outside of the protected space, the storeroom shall be situated in a safe and readily accessible position and shall be effectively ventilated by a ventilation system independent of all other spaces.

Spaces for storage of cylinders or tanks for extinguishing gas are not to be used for other purposes. These spaces are not to be located forward of the forward collision bulkhead, when fitted. Access to these spaces shall be possible from the open deck. Spaces situated below the deck shall be located no more than one deck below the open deck.

Spaces where entrance from the open deck shall not provided or which are located below deck shall be fitted with mechanical ventilation. The exhaust duct (suction) shall be lead to the bottom of the space. Such spaces shall be ventilated with at least six air changes per hour.

Fire-extinguishing media protecting the cargo holds (Refer Chapter 5 Sect 2[2.15]) may be stored in a room located forward of the cargo holds, but aft of the collision bulkhead, provided that both the local manual release mechanism and remote control(s) for the release of the media are fitted, and the latter is of robust construction or so protected as to remain operable in case of fire in the protected spaces. The remote controls shall be placed in the accommodation area in order to facilitate their ready accessibility by the crew. The capability to release different quantities of fire-extinguishing media into different cargo holds so protected shall be included in the remote release arrangement.

2.6.1.2 Design

Containers and associated pressure components shall be designed based upon an ambient temperature of 55°C (131°F).

For CO_2 fire extinguishing systems, the wall thickness of steel piping shall be suitable for the pressure and not less than the thickness identified in Part 5B-5-2/Table 5.2.3. Column A is for piping from storage containers to distribution station, and column B is for piping from distribution station to nozzles. For other fixed gas fire extinguishing systems, calculations showing compliance with Fire Safety Systems Code shall be submitted for approval.

Where the fire-extinguishing medium is used as the power source for the pre-discharge alarm, the piping to the alarm is to comply with Column B of Part 5B-5-2/Table **5.2.1**

.

The relief valve of a CO_2 fire extinguishing system is to discharge outside of the CO_2 container storage compartment.

Gray cast iron piping components are not to be used for fixed gas fire extinguishing systems.

Threaded joints in CO_2 systems shall be allowed only inside protected spaces and in CO_2 cylinder rooms.

TABLE 5.2.1

Minimum Steel Pipe Wall Thickness for CO2 Medium Distribution Piping

Nominal size, mm	*OD mm*	*A mm*	*B mm*
15	21.3	2.8	2.6
20	26.9	2.8	2.6
25	33.7	4.0	3.2
32	42.4	4.0	3.2
40	48.3	4.0	3.2
50	60.3	4.5	3.6
65	76.1	5.0	3.6
80	88.9	5.5	4.0
90	101.6	6.3	4.0
100	114.3	7.1	4.5
125	139.7	8.0	5.0
150	168.3	8.8	5.6

Nominal size, in.	*OD in.*	*A in.*	*B in.*
1/2	0.840	0.110	0.102
3/4	1.050	0.110	0.102
1	1.315	0.157	0.126
1 1/4	1.660	0.157	0.126
1 1/2	1.9	0.157	0.126
2	2.375	0.177	0.142
2 1/2	2.875	0.197	0.142
3	3.5	0.220	0.157
3 1/2	4.0	0.248	0.157
4	4.5	0.28	0.177
5	5.563	0.315	0.197
6	6.625	0.346	0.22

Notes:

1. The above minimum thicknesses are derived from those thicknesses available in ISO 4200 Series 1 (OD), JIS (N.P.S.), or ASTM (N.P.S.). Diameter and thickness according to other recognized standards will be accepted.
2. For threaded pipes, where approved, the thickness shall be measured to the bottom of the thread.
3. The internal surface of pipes outside of the engine room shall be galvanized.
4. For larger diameters the minimum wall thickness will be subject to special consideration by INTLREG.
5. In general, the minimum thickness is the nominal wall thickness and no allowance need be made for negative tolerance or reduction in thickness due to bending.

2.6.1.3 Alarm

Means shall be provided for automatically giving audible and visual warning of the release of fire extinguishing gas into any space to which personnel normally have access. The alarm is to operate for at least a 20-second period before the gas is released. Alarms may be pneumatically (by the extinguishing medium or by air) or electrically operated.

2.6.1.3(a) Electric. If electrically operated, the alarms shall be supplied with power from the main and an emergency source of electrical power.

2.6.1.3(b) Pneumatic. If pneumatically operated by air, the air supply shall be dry and clean and the supply reservoir shall be automatically kept charged at all times and shall be fitted with a low pressure alarm. The air supply may be taken from the starting air receivers. Any stop valve fitted in the air supply line shall be locked or sealed in the open position. Any electrical components associated with the pneumatic system shall be powered from the main and an emergency source of electrical power.

2.6.1.3(c) Uninterruptible Power Supply- For fire extinguishing systems that protect the machinery space containing the main source of power, instead of the power supply arrangements required above for electrically operated alarms and electrical components associated with pneumatic alarms, an uninterruptible power supply which is supplied with power from the emergency switchboard shall be provided.

2.6.1.4 Controls

Except as otherwise permitted herein, two independent manual control arrangements shall be provided, one of them being positioned at the storage location and the other in a readily accessible position outside the protected space.

2.6.2 Carbon Dioxide Systems

In addition to the applicable requirements of Part 5A- Chapter 13-Sect 3[3.4.7] of the *INTLREG Rules for Building and Classing Steel Vessels*, fixed carbon dioxide fire extinguishing systems shall be in accordance with Chapter II-2, Regulations 10.4.2 and 10.4.3 of the International Convention for the Safety of Life at Sea (SOLAS) 1974 and Amendments in force, and Chapter 1.4 and Chapter 5 of the International Code for Fire Safety Systems.

2.6.3 Foam

2.6.3.1 Fixed High Expansion Foam Systems

In addition to the applicable requirements of the Rules, fixed, high expansion foam systems shall be in accordance with Chapter 6.2.1 and Chapter 6.2.2 of the International Code for Fire Safety Systems.

Fixed foam fire-extinguishing systems using inside air shall be designed, constructed and tested in accordance with the requirements identified in MSC.1/Circ. 1271, *Guidelines for the Approval of High-Expansion Foam Systems Using Inside Air for the Protection of Machinery Spaces and Cargo Pump-Rooms.*

Foam concentrates shall be of an approved type.*

**Note:* Reference is made to the International Maritime Organization MSC/Circular 670 “Guidelines for the Performance and Testing Criteria, and Surveys of High-Expansion Foam Concentrates for Fixed Fire- Extinguishing Systems.”

2.6.3.2 Fixed Low Expansion Foam Systems

Low expansion foam systems may be fitted in addition to the required fixed fire extinguishing system. In addition to the applicable requirements of the Rules, fixed low expansion foam systems shall be in accordance with Chapter 6.2.1 and Chapter 6.2.3 of the International Code for Fire Safety Systems. Foam concentrates shall be of an approved type.**

***Note:* Reference is made to the International Maritime Organization MSC/Circular 582 "Guidelines for the Performance and Testing Criteria, and Surveys of Low-Expansion Foam Concentrates for Fixed Fire- Extinguishing Systems."

2.6.4 Fixed Water Spraying Systems

In addition to the requirements of the Rules, fixed water spraying systems shall be in accordance with Chapter 7 of the International Code for Fire Safety Systems.

2.6.5 Clean Agent Fire Extinguishing Systems

Fixed gas fire-extinguishing systems equivalent to those specified in Chapter 5 Sect 2[2.6] and [2.6.4] shall be submitted for approval, based on the guidelines specified in the IMO MSC/Circ. 848 as amended by MSC/Circ. 1267 and this subsection.

Fire extinguishing systems using Halon 1211, 1301, and 2402 and perfluorocarbons are prohibited. The use of a fire-extinguishing medium, which either by itself or under expected conditions of use gives off toxic gases, liquids and other substances in such quantities as to endanger persons, shall not permitted.

2.6.5.1 Fire Suppression Agent

The agent shall be recognized as a fire extinguishing medium by NFPA Standard 2001 or other recognized national standard. The minimum extinguishing concentration for net volume total flooding of the protected space at the lowest expected operating temperature, but not greater than 0°C (32°F), shall be determined by an acceptable cup burner test. The minimum design concentration shall be at least 30% above the minimum extinguishing concentration and shall be verified by full-scale test .Refer Chapter 5 Sect 2[2.6.5.2] below

The fire extinguishing agent shall be acceptable for use in occupied spaces by U.S. EPA or other recognized national organization. The concentrations for cardiac sensitization NOAEL (No Observed Adverse Effect Level), LOAEL (Lowest Observed Adverse Effect Level) and ALC (Approximate Lethal Concentration) shall be submitted.

2.6.5.2 Fire Tests

The system is to pass the fire tests in the Appendix of the IMO MSC/Circ. 848 as amended by MSC.1/Circ. 1267. The testing is to include the system components.

The system is to pass an additional fire test (number 1 in the Appendix of MSC/Circ. 848) with the agent storage cylinder at the lowest expected operating temperature, but not greater than 0°C (32°F).

2.6.5.3 System Components

The system shall be suitable for use in a marine environment. Major components (valves, nozzles, etc.) shall be made of brass or stainless steel, piping shall be corrosion resistant (stainless steel or galvanized) and the material is to have a melting point of not less than 927°C (1700°F).

The system and its components shall be designed, manufactured and installed in accordance with recognized national standards.

Containers and associated pressure components shall be designed based upon an ambient temperature of 55°C (131°F).

Minimum wall thickness for distribution piping shall be in accordance with Part 5B-5-2/Table 5.2.1 (Columns A or B, as applicable).

2.6.5.4 System Installation

2.6.5.4(a) Storage. As far as practicable, the fire suppression agent shall be stored outside the protected space in a dedicated storeroom. The storeroom shall be in accordance with Chapter 5 Sect 2[2.6.1.1] except that when mechanical ventilation is provided, the location of the exhaust duct (suction) is dependent on the density of the agent relative to air.

When allowed by the Flag Administration, the fire suppression agent may be stored inside the protected space. In addition to the related instructions from the Flag Administration, the installation shall be in accordance with paragraph 11 of IMO MSC/Circ. 848 as amended by MSC.1/Circ. 1267.

In the case of new installation in existing units, the storage of the fire suppression agent within a low fire risk space with a net volume at least two (2) times greater than the net volume of the protected space may be specially considered, based on the type of agent and the possible hazards for the personnel within the space.

2.6.5.4(b) Alarm. An audible and visual pre-discharge alarm in accordance with Chapter 5 Sect 2[2.6.1.3] and paragraph 6 of IMO MSC/Circ. 848 as amended by MSC.1/Circ. 1267 shall be provided.

2.6.5.4(c) Controls.

Except as otherwise permitted herein two independent manual control arrangements shall be provided, one of them being positioned at the storage location and the other in a readily accessible position outside of the protected space.

Automatic actuation shall not permitted when the protected space is normally accessed by personnel. If the protected space is permanently unmanned, except for repairs or maintenance, automatic actuation may be allowed in addition to manual actuation, provided that the following conditions are met:

i) The egress from the protected space is horizontal.

ii) Notices that the space is protected by an automatic activation system are prominently posted at the entrance to the space.

iii) A switch is provided near the entrance to disable the automatic release feature of the system. The switch is to have an indicator of its status such as red pilot light to indicate when the switch is activated (automatic release feature disabled). A sign shall be posted near the switch indicating that the automatic release feature shall be disabled when the space is occupied and that the automatic actuation shall be enabled when leaving the space. The sign is to also indicate that the manual release of the system remains enabled and the space shall be vacated immediately when the release alarm sounds.

iv) When the automatic release feature is disabled, all other controls, alarms, etc., are to remain activated.

v) An indicator at the control console is provided to indicate when the automatic release feature has been disabled.

2.6.5.4(d) Nozzles. The nozzle type, maximum nozzle spacing, maximum height and minimum nozzle pressure shall be within the limits to provide fire extinction as tested and verified in the appropriate fire test .Refer Chapter 5 Sect 2[2.6.5.2]

2.7 Additional Requirements for Vessels of 500 Gross Tons and Over Engaged in International Voyages

Vessels of 500 gross tons and over, engaged in international voyages, are to comply with the additional requirements in Chapter 5 Sect 2[2.8] and Sect 2[2.20] These requirements need not be applied for vessels in domestic service which do not engage in international voyages.

2.8 Fireman's Outfit

At least two complete fireman's outfits shall be carried on board the vessel. Refer Chapter 5 Sect 2[2.18.4] for vessels intended to carry oil in bulk.

Each outfit is to consist of an approved breathing apparatus, lifeline, a safety lamp, an axe, non-conduction boots and gloves, a rigid helmet and protective clothing.

Two (2) spare charges shall be provided for each required breathing apparatus. All air cylinders for breathing apparatus shall be interchangeable. Vessels that are equipped with suitably located means for fully recharging the air cylinders free from any contamination need carry only one spare charge for each required apparatus.

The fireman's outfits and equipment shall be stored so as to be easily accessible and ready for use and shall be stored in widely separate positions.

2.9 Emergency Escape Breathing Devices (EEBDs)

2.9.1 Accommodation Spaces

All ships are to carry at least two emergency escape breathing devices and one spare device within accommodation spaces.

2.9.2 Machinery Spaces

On all vessels, within the machinery spaces, emergency escape breathing devices shall be placed ready for use at easily visible places, which can be reached quickly and easily at any time in the event of fire. The location of emergency escape breathing devices shall also to take into account the layout of the machinery space and the number of persons normally working in the spaces. (Refer the Guidelines for the performance, location, use and care of emergency escape breathing devices, MSC/Circ. 849 and 1081). The number and locations of EEBDs shall be indicated in the fire control plan as required in Chapter 5 Sect 1[1.1.5]

A summary of the MSC/Circ. 1081 requirements are shown in Part 5B- Chapter 5-2/Table 5.2.1. This applies to machinery spaces where crew are normally employed or may be present on a routine basis.

Emergency escape breathing devices shall conform to the Fire Safety Systems Code

TABLE 5.2.2
Minimum Number of Required EEBDs

A. In machinery spaces for category A containing internal combustion machinery used for main propulsion (1):
a) One (1) EEBD in the engine control room, if located within the machinery space b) One (1) EEBD in workshop areas. If there is, however, a direct access to an escape way from the workshop, an EEBD shall not required; and c) One (1) EEBD on each deck or platform level near the escape ladder constituting the second means of escape from the machinery space (the other means being an enclosed escape trunk or watertight door at the lower level of the space).
B. In machinery spaces of category A other than those containing internal combustion machinery used for main propulsion,
One (1) EEBD should, as a minimum, be provided on each deck or platform level near the escape ladder constituting the second means of escape from the space (the other means being an enclosed escape trunk or watertight door at the lower level of the space).
C. In other machinery spaces
The number and location of EEBDs shall be determined by the Flag Administration.

Note:

1Alternatively, a different number or location may be determined by the Flag Administration taking into consideration the layout and dimensions or the normal manning of the space.

2.10 Portable Fire Extinguishers

Spare charges shall be provided for 100% of the first ten (10) extinguishers and 50% of the remaining fire extinguishers which can be recharged on board . Not more than sixty (60) total spare charges are required. Instructions for recharging shall be carried on board.

For fire extinguishers which cannot be recharged on board, additional portable fire extinguishers of the same quantity, type, capacity and number, as determined above, shall be provided in lieu of spare charges. Portable fire extinguishers shall comply with the requirements of the Fire Safety Systems Code

2.11 Portable Foam Applicator Units

Each Category A machinery space shall be provided with at least one portable foam applicator unit.

2.11.1 Specification

A portable foam applicator unit is to consist of a foam nozzle/branch pipe, either of a self-inducing type or in combination with a separate inductor, capable of being connected to the fire main by a fire hose, together with a portable tank containing at least 20 l (5.3 US gal.) of foam concentrate and at least one spare tank of foam concentrate of the same capacity.

2.11.2 System Performance

i) The nozzle/branch pipe and inductor shall be capable of producing effective foam suitable for extinguishing an oil fire, at a foam solution flow rate of at least 200 l/min (52.8 gpm) at the nominal pressure in the fire main.

ii) The foam concentrate shall be approved by INTLREG based on guidelines in the Guidelines for the Performance and Testing Criteria and Surveys of Low-expansion Foam Concentrates for Fixed Fire-extinguishing Systems (MSC/Circ.582/Corr.1).

iii) The values of the foam expansion and drainage time of the foam produced by the portable foam applicator unit shall not to differ more than ±10% of that determined in Sect 2[2.11.2] ii) above

iv) The portable foam applicator unit shall be designed to withstand clogging, ambient temperature changes, vibration, humidity, shock, impact and corrosion normally encountered on ships.

2.12 Fire Detection and Fire Alarm Systems

Any required fixed fire detection and fire alarm system is to meet the requirements in Chapter 9 of the International Code for Fire Safety Systems.

In addition to the above, the requirement of SOLAS II-2/7.7 "*manually operated call points complying with the Fire Safety Systems Code shall be installed throughout the accommodation spaces*, *service spaces and control stations"*, does not require the fitting of a manually operated call point in an individual space within the accommodation spaces, service spaces and control stations. However, a manually operated call point shall be located at each exit (inside or outside) to the open deck from the corridor such that no part of the corridor is more than 20 m (66 ft) from a manually operated call point. Service spaces and control stations which have only one access, leading directly to the open deck, are to have a manually operated call point not more than 20 m (66 ft) (measured along the access route using the deck, stairs and/or corridors) from the exit. A manually operated call point shall not required to be installed for spaces having little or no fire risk, such as voids and carbon dioxide rooms, nor at each exit from the navigation bridge, in cases where the control panel is located in the navigation bridge.

2.13 Sample Extraction Smoke Detection Systems

Any required fixed sample extraction smoke detection system is to meet the requirements in Chapter 10 of the International Code for Fire Safety Systems.

2.14 Accommodation and Service Spaces

2.14.1 Fixed Systems

A fire detection and alarm system (methods IC or IIIC) or an automatic sprinkler, fire detection and fire alarm system (method IIC) shall be installed in accommodation and service spaces, in accordance with Regulation II-2/7.5.5 and Regulation II-2/10.6.2 of the International Convention for the Safety of Life at Sea (SOLAS) 1974 and Amendments in force.

2.14.2 Portable Fire Extinguishers

Portable fire extinguishers shall be provided, as required by Chapter 5 Sect 1[1.5]
However, for vessels of 1000 gross tons and above, the total number of extinguishers for accommodation spaces, service spaces, spaces in which the vessel's radio or main navigation equipment or emergency source of power is located, and locations where the fire recording or fire control equipment is located shall not to be less than five.

2.15 Fixed Fire Extinguishing Arrangements in way of Cargo Spaces

2.15.1 Cargo Vessels of 2000 Gross Tons and Over

Except for cargo spaces covered by Chapter 5 Sect 2[2.16] and Chapter 5 Sect 2[2.17] below, cargo spaces of cargo vessels of 2000 gross tons and above shall be provided with approved fixed fire extinguishing systems.

2.15.2 Exceptions

A fixed system need not be fitted in the case of cargo holds fitted with steel hatch covers, and where all ventilators and other openings leading to the holds can be effectively closed, and the vessel is constructed and intended solely for carrying ore, coal, grain, unseasoned timber or noncombustible cargoes.

2.15.3 Controls

As an alternative to providing the controls required by Chapter 5 Sect 2[2.6.1.4]~~,~~ a single manual means may be provided at the storage location.

2.16 Ro-Ro Cargo Spaces

2.16.1 Fire Detection

An approved automatic fire detection and fire alarm system complying with Chapter 5 Sect 2[2.12] and the following shall be provided. Manual call points shall be provided to activate the fire alarm from the navigation bridge and the passageways having entrances to the ro-ro spaces. The fire alarm indicator/control panel shall be located on the bridge or at the fire control station, if provided. When the indicator/control panel is located at the fire control station, an additional alarm shall be provided on the navigation bridge.

2.16.2 Fire Extinguishing Arrangements

Ro-ro cargo spaces capable of being sealed shall be fitted with an approved fixed gas fire extinguishing system. If a carbon dioxide system is fitted, the quantity of gas available shall be at least sufficient to give a minimum volume of free gas equal to 45% of the gross volume of the largest such cargo space which is capable of being sealed, and the arrangements shall be such as to ensure that at least two thirds of the gas required for the relevant spaces is introduced within 10 minutes.

In lieu of the above, a fixed high expansion foam system or water spray system may be fitted subject to special consideration. Ro-ro spaces not capable of being sealed shall be fitted with a fixed pressure water- spraying system. The water-spraying system, drainage and pumping arrangements will be subject to special consideration.

As an alternative to providing the controls required by Chapter 5 Sect 2[2.6.1.4], a single manual means may be provided at the storage location.

2.16.3 Portable Fire Extinguishers

At least one approved portable extinguisher shall be located at each cargo space access.

2.16.4 Ro-Ro Spaces Carrying Motor Vehicles with Fuel in Their Tanks

2.16.4.1

Each ro-ro cargo space intended for the carriage of motor vehicles with fuel in their tanks for their own propulsion is to meet the requirements of Chapter 6 Sect 6[6.3.3]

2.16.4.2

Gravity drainage systems are not to be led to machinery spaces or other spaces where sources of ignition are present.

2.16.4.3

In addition, each space shall be provided with at least three water fog applicators and one portable foam applicator unit complying with the provisions of Chapter 5 Sect 2[2.11]provided that at least two such units are available on the vessel for use in such ro-ro cargo spaces.

2.16.4.4

Portable fire extinguishers suitable for fighting oil fires shall be provided at each vehicle deck level in all spaces where vehicles are carried. Extinguishers shall be located not more than 20 m (65 ft) apart on both sides of the vessel. Portable extinguishers required under Chapter 5,Sect 2[2.16.3] may be credited in meeting this requirement.

2.17 Cargo Spaces Carrying Vehicles with Fuel in Their Tanks (Other Than Ro-Ro Spaces)

Cargo spaces, other than ro-ro spaces, intended for the carriage of motor vehicles with fuel in their tanks for their own propulsion are to comply with Chapter 5 Sect 2[2.16]with the following exceptions:

i) A sample extraction smoke detection system complying with the provisions of Chapter 5 Sect 2[2.13] may be permitted in lieu of Chapter 5 Sect 2[2.16.1], and

ii) The provisions of Chapter 5 Sect 2[2.16.4.3] shall be omitted

2.18 Additional Requirements for Vessels Intended to Carry Oil in Bulk

2.18.1 Fixed Fire Extinguishing Systems

2.18.1.1 Cargo Pump Rooms

Cargo pump rooms shall be provided with an approved fixed fire extinguishing system controlled from the deck. Refer also Chapter 6 Sect 6[6.1.7.1]b)

2.18.1.2 Pump Room Alarms

Audible alarms to warn of the release of fire extinguishing medium into pump rooms, as required by Chapter 5 Sect 2[2.6.1.3], may be of the pneumatic type or electric type. Air, and not CO_2, shall be used in the testing of pneumatic alarms.

When electrically operated alarms are used, the arrangements shall be such that the electric actuating mechanism shall be located outside of the pump room.

2.18.1.3 System Arrangement

When a tank smothering system is fitted, arrangements shall be provided to prevent tank gases from entering dry spaces. When mixed cargo shall be carried, the smothering lines for the cargo oil tanks shall be fitted with stop-check valves in order to prevent contamination of cargo from one tank to another.

2.18.1.4 Cargo Tank Protection

For tankers of 30.5 m (100 ft) in length and above, a deck foam system shall be installed for the protection of all cargo tanks. For tankers less than 30.5 m (100 ft) in length, two B-V extinguishers .Refer Chapter 5 Sect 1,Table 5.1.1 shall be provided for the protection of the cargo tanks.

2.18.2 Fire Main Isolation Valves

Isolation valves shall be fitted in the fire main at the poop front in a protected position and on the tank deck at intervals of not more than 40 m (131 ft) for preserving the integrity of the fire main system in case of fire or explosion

2.18.3 Gas Detectors

Two portable gas detectors shall be provided.

2.18.4 Fireman's Outfits

Two outfits, in addition to those required by Chapter 5 Sect 2[2.8] shall be provided.

2.19 Chemical and Gas Carriers

A fixed fire extinguishing system suitable for use with the intended cargo shall be provided in accordance with Part 7B, Chapters 3 of the *INTLREG Rules for Building and Classing Steel Vessels*, as appropriate. Other special product carriers will be subject to special considerations.

2.20 Release of Smoke from Machinery Space

Suitable arrangements shall be made to permit the release of smoke, in the event of fire, from the machinery space of Category A. The normal ventilation may be acceptable for this purpose. The means of control shall be provided for permitting the release of smoke and such control shall be located outside the space concerned so that they will not be rendered inaccessible in the event of fire in the space they serve. Refer also Chapter 6 Sect 3[3.3.10.1]

SECTION 3 REQUIREMENTS FOR VESSELS UNDER 500 GROSS TONS

Contents

3.1 Fire Pumps

3.1.1 Number of Pumps

All vessels are to have at least two fire pumps. Only one of the pumps need be independently power-driven, and one of the pumps may be attached to the propulsion unit. For vessels less than 20 m (65 ft) in length, one power-driven pump, which may be an attached unit, and one hand operated fire pump may be provided.

3.1.2 Capacity

The capacity of each power-driven fire pump shall be in accordance with the 5B- Chapter 5-Sect 3/Table 5.3.1 Hand pumps, where permitted, are to have a minimum capacity of 1.1 m^3/hr (5 gpm).

3.2 Fixed Fire Extinguishing Systems

3.2.1 Fixed Systems

For all vessels, fixed fire extinguishing systems shall be fitted in the machinery spaces when propulsion and auxiliary engines with a total aggregate power of 750 kW (1000 bhp) or greater are installed (Refer Chapter 1 Sect 1[1.7.1]) and in any machinery space in which an oil fuel unit for heated fuel oil is installed, regardless of the total aggregate power.

3.2.2 Portable Extinguishers

Machinery spaces shall be provided with portable fire extinguishers, in accordance with the applicable requirements in Part 5B- Chapter 5-1/Table-5.1.2

3.3 Carbon Dioxide Systems

Where a fixed carbon dioxide fire extinguishing system is installed, the system is to comply with the requirements of Chapter 5 Sect 2[2.6.1] and Sect2[2.6.2], except that storage arrangements may be in accordance with the following.

3.3.1 Storage

Generally, the cylinders shall be located outside of the protected space in a room which is situated in a safe and readily accessible location. The access doors to the storage space are to open outwards. The storage room shall be gastight and effectively ventilated. The ventilation system shall be independent of the protected space. Any entrance to the storage room shall be independent of the protected space, except that where this is impracticable due to space limitations, the following requirements may be considered:

i) The door between the storage location and the protected space shall be self-closing with no hold- back arrangements.

ii) The space where cylinders are stored shall be adequately ventilated by a system which is independent of the protected space.

iii) Means shall be provided to prevent unauthorized release of gas, such as containment behind a break glass.

iv) There shall be provision to vent the bottles to the atmosphere in order to prevent a hazard to personnel occupying the storage area.

v) An additional entrance to the storage location, independent of the protected space, is provided.

3.4 Axe

One fire axe shall be provided on each vessel 20 m (65 ft) in length and over.

3.5 Vessels Intended to Carry Oil in Bulk

3.5.1 Cargo Pump Rooms

Cargo pump rooms shall be provided with an approved fixed fire extinguishing system controlled from the deck.

3.5.2 Cargo Tank Protection

For tankers of 30.5 m (100 ft) in length and above, a deck foam system shall be installed for the protection of all cargo tanks. For tankers less than 30.5 m (100 ft) in length, two B-V extinguishers (Refer Part 5B- Chapter 5-Sect 3/Table 5.3.1) shall be provided for the protection of the cargo tanks.

TABLE 5.3.1

Fire Pump Minimum Capacity for Vessels Less Than 500 Gross Tons

Vessel Length	*Minimum Capacity*
Less than 20 m (65 ft)	5.50 m^3/hr (25 gpm)
20 m (65 ft) or greater but less than 30.5 m (100 ft)	11.0 m^3/hr (50 gpm)
30.5 m (100 ft) or greater but less than 61 m (200 ft)	14.3 m^3/hr (66.6 gpm)
61 m (200 ft) or greater	Capacity to be in accordance with Chapter 5 Sect 2[2.3.1]

CHAPTER 6 ELECTRICAL INSTALLATIONS

CONTENTS

SECTION 1 GENERAL

Contents

1.1 General

The requirements of this Part shall apply to all ships except modified for vessels classed for limited service.. Consideration will be given to arrangements or details of equipment which comply with other National or International standards in so far as they are not less effective and reliable. Electrical equipment is to be designed and arranged such that current-carrying parts with potential to earth are protected against accidental contact and to provide accessibility to parts requiring inspection or adjustment.

For vessels having an aggregate generator capacity not exceeding 100 kW, the requirements contained in Chapter 6 Sect 5[5.4] shall be complied with. Electrical installations in machinery spaces with gasoline engines will be specially considered

1.2 Definitions

The following definitions apply for the purpose of this Section.

1.2.1 Cascade Protection

The application of protective devices in which the device nearest to the source of power has short circuit rating equal to or in excess of the maximum prospective short circuit current,while devices in succeeding steps further from the source have short circuit rating

1.2.2 Earth

A large conducting body, such as the metal hull of the ship, used as an arbitrary zero of potential.

1.2.3 Earthed Distribution System

A system in which one pole of a single phase system or the neutral point of a three phase system is earthed, but the earthing connection does not normally carry current.

1.2.4 Essential Services

Essential services are those considered necessary for:

- Continuous operation to maintain propulsion and steering (primary essential services);
- Non-continuous operation to maintain propulsion and steering and a minimum level of safety for the vessel's navigation and systems, including safety for dangerous cargoes to be carried (secondary essential services); and
- Emergency services as described in Chapter 6 Sect 2[2.3.2] (each service is either primary essential or secondary essential depending upon its nature).

  Examples of primary essential services and secondary essential services are as described in Table 6.1.4 and Table 6.1.5

1.2.5 Explosion-proof (Flameproof) Equipment

1.2.5.1 Explosion-proof equipment is equipment having an enclosure capable of:

i) Withstanding an explosion within it of a specified flammable gas or vapor, and

ii) Preventing the ignition of the specified flammable gas or vapor in the atmosphere surrounding the enclosure by sparks, flashes or explosions of the gas or vapor within, and

1.2.5.2

Operates at such an external temperature that a surrounding flammable atmosphere will not be ignited. Where explosion-proof equipment is required by these Rules, equipment certified as being flameproof, as defined in IEC Publication 60079 series or other recognized standard may be accepted.

1.2.6 Hazardous Area (Hazardous Location)

An area where flammable or explosive vapor, gas, or dust may normally be expected to accumulate.

1.2.7 High Voltage

High Voltage in these Rules refers to voltages above 1000 V up to and including 15 kV AC.

1.2.8 Hull-return System

A system in which insulated conductors are provided for connection to one pole or phase of the supply, the hull of the vessel or other permanently earthed structure being used for effecting connections to the other pole or phase.

1.2.9 Increased Safety

Type of protection applied to electrical apparatus that does not produce arcs or sparks in normal service, in which additional measures are applied so as to give increased security against the possibility of excessive temperatures and of the occurrence of arc and sparks. Refer IEC Publication 60079-7.

1.2.10 Inhomogeneous Field

An electric field which does not have a constant voltage gradient between electrodes.

1.2.11 Intrinsically-safe

A circuit or part of a circuit is intrinsically safe when any spark or any thermal effect produced in the test conditions prescribed in a recognized standard (such as IEC Publication 60079-11) is incapable of causing ignition of the prescribed explosive gas atmosphere.

1.2.11.1 Category “ia”

Apparatus which is incapable of causing ignition in normal operation, or with a single fault, or with any combination of two faults applied, with the following safety factors:

In normal operation:	1.5
With one fault:	1.5
With two faults:	1.0

Above safety factors are applied to the current, voltage, or their combination, as specified in 5.2 of IEC Publication 60079-11.

1.2.12 Low Voltage

Low Voltage in these Rules refers to voltages up to and including 1000 V AC and 1500 V DC.

1.2.13 Minimum Comfortable Condition of Habitability

A condition in which at least services such as cooking, heating, domestic refrigeration, mechanical ventilation, sanitary and fresh water are adequately provided.

1.2.14 Nominal Voltage

Nominal Voltage (U_n) – The nominal value assigned to a circuit or system for the purpose of conveniently designating its voltage class (as 120/240 V, 480/277 V, 600 V). The actual voltage at which a circuit operates can vary from the nominal within a range that permits satisfactory operation of equipment.

U_O (as relates to cable voltage rating) – The rated power frequency voltage between conductor and earth or metallic screen for which the cable is designed.

1.2.15 Non-periodic Duty Rating

A rating at which the machine is operated continuously or intermittently with varying load and speed within the permissible operating range. The load and speed variations include the overloads applied frequently, which may greatly exceed the full load rating of the machine.

1.2.16 Non-sparking Fan

A fan consisting of a combination of impeller and housing shall not to produce sparks by static electricity or by entry of foreign objects in both normal and abnormal conditions.

1.2.17 Overvoltage Category

Overvoltage Category (of a circuit or within an electrical system) – Conventional number based on limiting the values of prospective transient over voltages occurring in a circuit and depending on the means employed to influence the over voltages.

1.2.18 Overvoltage Withstand Test

Overvoltage Withstand Test (layer test) **–** Test intended to verify the power-frequency withstand strength along the winding under test and between its phase (strength between turns and between layers in the windings).

1.2.19 Periodic Duty Rating

A rating at which the machine is operated repeatedly on a cycle of sequential loading with starting, electric braking, no-load running, rest and de-energized periods, where applicable. The time for the duration of operating cycle (duty cycle) shall be 10 minutes and the ratio (i.e., cyclic duration factor) between the period of loading (including starting and electric braking) and the duty cycle shall be one of the values of 15%, 25%, 40% or 60%.

1.2.20 Pollution Degree

Pollution Degree (of environmental conditions) **–** A conventional number based on the amount of conductive or hygroscopic dust, ionized gas or salt, and on the relative humidity and its frequency of occurrence resulting in hygroscopic absorption or condensation of moisture leading to reduction in dielectric strength and/or surface resistivity of the insulating materials of devices and components.

1.2.21 Portable Apparatus

Portable apparatus is any apparatus served by a flexible cord.

1.2.22 Pressurized Equipment

Equipment having an enclosure in which positive pressure is maintained to prevent against the ingress of external atmosphere and complying with the requirements with IEC Pub 60079-2,NEPA 496or other recognized standard will also be acceptable.

1.2.23 Semi-enclosed Space

A space limited by decks and/or bulkheads in such a manner that the natural conditions of ventilation in the space are notably different from those obtained on open deck.

1.2.24 Separate Circuit

A circuit which is independently protected by a circuit protection device at the final sub-circuit and is dedicated to a single load.

1.2.25 Short Circuit

A short circuit is an abnormal connection through a negligible impedance, whether made accidentally or intentionally, between two points of different potential in a circuit.

1.2.26 Short-time Rating

A rating at which the machine is operated for a limited period, which is less than that required to reach the steady temperature condition, followed by a rest and de-energized period of sufficient duration to re-establish the machine temperature within 2°C (3.6°F) of the coolant.

1.3 Electrical Power Critical Notations

The following Class notations are dependent upon the supply of electrical power and the services shall be maintained with one generator held in reserve: Fire Fighting (**FFV**) notations as per Part 7B.Chapter 5 of the *OSV Rules* and Refrigeration notations as per Part 7B/Chapter 2/sect 10 of the *INTLREG Rules for Building and Classing Steel Vessels*.

1.4 Plans and Data to Be Submitted

Refer Chapter 6 Sect 2[2.1] ,Chapter 6 Sect3[3.1], Chapter 6 Sect 4[4.1], Chapter 6 Sect 5[5.2.2]

1.5 Standard Distribution System

The following are recognized as standard systems of distribution. Distribution systems differing from these will be specially considered.

- Two-wire direct current
- Three-wire direct current
- Two-wire single-phase alternating
- Three-wire three-phase alternating current*
- Four-wire three-phase alternating current with solidly earthed neutral but not with hull return

* *Note:* Three-wire single-phase AC may be used in conjunction with this system for lighting.

1.6 Voltage and Frequency Variations

Electrical appliances supplied from the main or emergency systems, shall be so designed and manufactured that they are capable of being operated satisfactorily under the normally occurring variations in voltage and frequency. Unless otherwise stated in national or international standards, the variations from the rated value may be taken from the Chapter 6 Sect 1 Table 6.1.1. Any special system, such as electronic circuits, which cannot operate satisfactorily within the limit shown in Chapter 6 Sect 1 Table 6.1.1, shall not to be supplied directly from the system but by alternative means, such as through a stabilized supply.

For generators ,Refer Chapter 6 Sect 4[4.2.9.1],[4.2.10.1], [4.2.11.2]

For installations supplied by generators, the voltage on the main switchboard's bus-bars is to be kept between 97.5 and 102.5 percent of the installation's nominal voltage under all steady load conditions.

1.7 Materials

All electrical equipment shall be constructed of durable and flame-retardant materials. Materials shall be resistant to corrosion, moisture, high and low temperatures, and are to have other qualities necessary to prevent deterioration in the ambient conditions that the equipment may be expected to encounter.

1.8 Insulation Material

For the purposes of these requirements, insulating material is designated as follows.

1.8.1 Class A Insulation

Materials or combinations of materials such as cotton, silk and paper when suitably impregnated or coated or when immersed in a dielectric liquid such as oil. Other materials or combinations of materials may be included in this class if by experience or accepted tests they can be shown to be capable of operation at 105°C (221°F).

1.8.2 Class B Insulation

Materials or combinations of materials such as mica, glass fiber, etc., with suitable bonding substances. Other materials or combinations of materials, not necessarily inorganic, may be included in this class if by experience or accepted tests they can be shown to be capable of operation at 130°C (266°F).

1.8.3 Class E Insulation

Materials or combinations of materials which by experience or accepted tests can be shown to be capable of operation at 120°C (248°F) (materials possessing a degree of thermal stability allowing them to be operated at a temperature 15°C (27°F) higher than Class A materials).

1.8.4 Class F Insulation

Materials or combinations of materials such as mica, glass fiber, etc., with suitable bonding substances. Other materials or combinations of materials, not necessarily inorganic, may be included in this class if by experience or accepted tests they can be shown to be capable of operation at 155°C (311°F).

1.8.5 Class H Insulation

Materials or combinations of materials such as silicone elastomer, mica, glass fiber, etc., with suitable bonding substances such as appropriate silicone resins. Other materials or combinations of materials may be included in this class if by experience or accepted tests they can be shown to be capable of operation at 180°C (356°F).

1.8.6 Insulation for Temperature Above 180°C (356°F)

Materials or combination of materials which by experience or accepted tests can be shown to be capable of satisfactory operation at temperature over 180°C (356°F) will also be considered. Supporting background experience or report of tests conducted in accordance with a recognized standard ascertaining their suitability for the intended application and temperature operation shall be submitted for review.

1.9 Degree of Protection for Enclosure

The designation to indicate the degree of protection consists of the characteristic letters IP followed by two numerals (the “characteristic numerals”) indicating conformity with conditions stated in Chapter 6 sect 1 Table 6.1.2 and Table 6.1.3 The test and inspection for determining the degree of protection may be carried out in accordance with IEC Publication 60529 by the manufacturer whose certificate of tests will be acceptable and shall be submitted upon request from INTLREG. The type of enclosure required for protection of equipment shall be suitable for the intended location. Refer Chapter

6 Sect 3[3.2.1.1] for selection of a protective enclosure for electrical equipment based on location condition. Equipment in compliance with recognized national standards will also be considered. For high voltage equipment Refer Chapter 6 Sect 5 Table 6.5.1

1.10 Temperature Ratings

1.10.1 General

For equipment associated with control and monitoring systems described in Part 6,chapter 2,sect 4/[4.6.17.2]

For purposes of rating of equipment a maximum ambient air temperature of 45°C (113°F) shall be assumed.

Where ambient temperatures in excess of 45°C (113°F) are expected the rating of equipment shall be based on the actual maximum ambient air temperature.

The use of lower ambient temperatures may be considered provided the total rated temperature of the equipment shall not exceeded and where the lower values can be demonstrated. The use of a value for ambient temperature less than 40°C (104°F) is only permitted in spaces that are environmentally controlled.

1.10.2 Reduced Ambient Temperature

1.10.2.1 Environmentally Controlled Spaces

Where electrical equipment is installed within environmentally-controlled spaces, the ambient temperature for which the equipment shall be rated may be reduced from 45°C and maintained at a value not less than 35°C, provided:

i) The equipment shall not to be used for emergency services.

ii) Temperature control is achieved by at least two independent cooling systems so arranged that in the event of loss of one cooling system for any reason, the remaining system(s) is capable of satisfactorily maintaining the design temperature. The cooling equipment shall be rated for a 45°C ambient temperature.

iii) The equipment shall be able to initially start to work safely at a 45°C ambient temperature until such a time that the lesser ambient temperature may be achieved.

iv) Audible and visual alarms are provided, at a continually-manned control station, to indicate any malfunction of the cooling systems.

1.10.3 Rating of Cables

In accepting a lesser ambient temperature than 45°C, it shall be ensured that electrical cables for their entire length are adequately rated for the maximum ambient temperature to which they are exposed along their length.

1.10.4 Ambient Temperature Control Equipment

The equipment used for cooling and maintaining the lesser ambient temperature shall be classified as a secondary essential service, in accordance with Sect 1[1.2.4] and the capability of cooling shall be witnessed by the Surveyor at sea trial.

1.11 Clearances and Creepage Distances

The distances between live parts of different potential and between live parts and the case or other earthed metal whether across surfaces or in air, are to be adequate for working voltage having regard to the nature of the insulating material and conditions of service Refer Chapter 6 Sect 4[4.4.6.5]

1.12 Service Trial

1.12.1 Electrical Installation for Ship Services

All auxiliary apparatus shall be tried under working conditions. Each generator shall be run for a time sufficient to show satisfactory operation, and parallel operation with all possible combinations shall be demonstrated. Each auxiliary motor necessary to the operation of the vessel shall be run for a time sufficient to show satisfactory performance at such load as can readily be obtained. All main switches and circuit breakers shall be operated, but not necessarily at full load. The operation of the lighting system, heaters, etc., shall be satisfactorily demonstrated. The entire installation is to operate to the satisfaction of the Surveyor, and the drop in voltage on any part of the installation shall not to exceed 6%.

1.12.2 Communication Facilities

Satisfactory operation of the interior communications system required by Chapter 6 Sect 2[2.8] shall be demonstrated to the Surveyor during sea trials. Particular attention shall be given to demonstrating that the voice communication systems required by Chapter 6 Sect 2[2.8] provide the capability of carrying on a conversation while the vessel is being navigated.

TABLE 6-1-1

Voltage and Frequency Variations Refer Part 6-2-4/[4.2.3]

Voltage and Frequency Variations for AC Distribution Systems		
Quantity in Operation	*Permanent Variation*	*Transient Variation (Recovery Time)*
Frequency	±5%	±10% (5 s)
Voltage	+6%, -10%	±20% (1.5 s)

Voltage Variations for DC Distribution Systems (such as systems supplied by DC generators or rectifiers)	
Parameters	*Variations*
Voltage tolerance (continuous)	±10%
Voltage cyclic variation deviation	5%
Voltage ripple (AC rms over steady DC voltage)	10%

Voltage Variations for Battery Systems	
Type of System	*Variations*
Components connected to the battery during charging (Refer Note)	+30%, –25%
Components not connected to the battery during charging	+20%, –25%

Note: Different voltage variations as determined by the charging/discharging characteristics, including the ripple voltage from the charging device, may be considered.

TABLE 6.1.2

Degree of Protection of Electrical Equipment (First IP Numeral)

First IP Numeral	Short Description	Definition
0	Non-protected	No special protection
1	Protected against solid objects greater than 50 mm (2 in.)	A large surface of the body, such as a hand (but no protection against deliberate access). Solid object exceeding 50 mm (2 in.) in diameter.
2	Protected against solid objects greater than 12 mm (0.5 in.)	Fingers or similar objects not exceeding 80 mm (3.15 in.) in length. Solid objects exceeding 12 mm (0.5 in.) in diameter.
3	Protected against solid objects greater than 2.5 mm (0.1 in.)	Tools, wires, etc. of diameter or thickness greater than 2.5 mm (0.1 in.). Solid objects exceeding 2.5 mm (0.1 in.) in diameter
4	Protected against solid objects greater than 1 mm (0.04 in.)	Wires or strips of thickness greater than 1 mm (0.04 in.). Solid objects exceeding 1 mm (0.04 in.) in diameter.
5	Dust protected	Ingress of dust shall not totally prevented, but dust does not enter in sufficient quantity to interfere with satisfactory operation of the equipment
6	Dust-tight	No ingress of dust

[Designation]

The degree of protection is designated as shown in the following examples:

When it is required to indicate the degree of protection by only one characteristic numeral which shows either degree of protection against foreign bodies and electrical shock or against liquid, the omitted numeral shall be replaced by the letter X.

Examples:

1 IP56 The first characteristic numeral of “5” The second characteristic numeral of “6”.

2 IPX5 Degree of protection against only liquid.

3 IP2X Degree of protection against only foreign bodies and electrical shock.

TABLE 6.1.3

Degree of Protection of Electrical Equipment (Second IP Numeral)

Second IP Numeral	*Short Description*	*Definition*
0	Non-protected	No special protection.
1	Protected against dripping water	Dripping water (vertically falling drops) is to have no harmful effect.
2	Protected against dripping water when tilted up to 15°.	Vertically dripping water is to have no harmful effect when the enclosure is tilted at any angle up to 15° from its normal position.
3	Protected against spraying water	Water falling as spray at an angle up to 60° from the vertical is to have no harmful effect.
4	Protected against splashing water	Water splashed against the enclosure from any direction is to have no harmful effect.
5	Protected against water jets	Water projected by a nozzle against the enclosure from any direction is to have no harmful effect.
6	Protected against heavy seas	Water from heavy seas or water projected in powerful jets shall not to enter the enclosure in harmful quantities.
7	Protected against the effects of immersion	Ingress of water in a harmful quantity shall not to be possible when the enclosure is immersed in water under defined conditions of pressure and time.
8	Protected against submersion	The equipment is suitable for continuous submersion in water under conditions which shall be specified by the manufacturer. *Note:* Normally, this will mean that the equipment is hermetically sealed. However, with certain types of equipment, it can mean that water can enter, but only in such a manner that it produces no harmful effects.
9	Protected against high pressure and temperature water jets	Water projected at high pressure and high temperature against the enclosure from any direction shall not have harmful effects

TABLE 6.1.4

Primary Essential Services

(a)	Steering gears
(b)	Pumps for controllable pitch propellers
(c)	Scavenging air blower, fuel oil supply pumps, fuel valve cooling pumps, lubricating oil pumps and cooling water pumps for main and auxiliary engines, turbines and shafting necessary for propulsion.
(d)	Ventilation necessary to maintain propulsion
(e)	Forced draft fans, feed water pumps, water circulating pumps, vacuum pumps and condensate pumps for steam plants on steam turbine ships, and also for auxiliary boilers on vessels where steam is used for equipment supplying primary essential services
(f)	Oil burning installations for steam plants on steam turbine vessels and for auxiliary boilers where steam is used for equipment supplying primary essential services
(g)	Low duty gas compressor and other boil-off gas treatment facilities supporting boil-off gas usage as fuel to main propulsion or electric power generation machinery.
(h)	Azimuth thrusters which are the sole means for propulsion/steering with lubricating oil pumps, cooling water pumps, etc.
(i)	Electrical equipment for electric propulsion plant with lubricating oil pumps and cooling water pumps
(j)	Electric generators and associated power sources supplying primary essential equipment
(k)	Hydraulic pumps supplying primary essential equipment
(l)	Viscosity control equipment for heavy fuel oil
(m)	Control, monitoring and safety devices/systems of equipment for primary essential services.

TABLE 6.1.5

Secondary Essential Services

(a)	Windlass
(b)	Fuel oil transfer pumps and fuel oil treatment equipment
(c)	Lubrication oil transfer pumps and lubrication oil treatment equipment
(d)	Pre-heaters for heavy fuel oil
(e)	Starting air and control air compressors
(f)	Bilge, ballast and heeling pumps
(g)	Fire pumps and other fire extinguishing medium pumps
(h)	Ventilating fans for engine and boiler rooms
(i)	Services considered necessary to maintain dangerous spaces in a safe condition (inert gas system of an oil carrier, ventilation for Ro-Ro cargo spaces, etc.)
(j)	Re-liquefaction plant on liquefied gas carriers
(k)	Navigation lights, aids and signals
(l)	Internal communication equipment required by Chapter 6 Sect 2[2.8]
(m)	Fire detection and alarm system
(n)	Lighting system
(o)	Electrical equipment for watertight and fire-tight closing appliances
(p)	Electric generators and associated power sources supplying secondary essential equipment
(q)	Hydraulic pumps supplying secondary essential equipment
(r)	Control, monitoring and safety systems for cargo containment systems
(s)	Control, monitoring and safety devices/systems of equipment for secondary essential services.
(t)	Ambient temperature control equipment required by Chapter 6 Sect 1[1.10.2]
(u)	Watertight Doors Refer Part 6- Chapter 7-Sect 4/[4.10] & [4.10.2]

SECTION 2 SHIPBOARD SYSTEMS

Contents

2.1 Plans and Data to be Submitted

2.1.1 Wiring

2.1.1.1 Systems

One line diagrams for the following electrical systems shall be submitted for review.

- Power Supply and Distribution
- Lighting including Navigation Light
- Internal Communication
- General Emergency Alarm
- Fire Detection and Alarm
- Steering Gear Control
- Intrinsically-safe Equipment
- Emergency Generator Starting
- Inert Gas Control, Monitoring, and Alarm

2.1.1.2 Data for Wiring Systems

The one line diagrams are to show the circuit designation, type and size of cables, cable grouping and banking, trip setting and rating of the circuit protection devices, the location of electrical equipment accompanied by list of components, complete feeder list, rated load current for each branch circuit. The one line diagram for power supply and distribution systems is to indicate the following component details.

Note: For vessels having a length of 61 m (200 ft) and over, a voltage drop calculation for the longest run of each cable size shall be included.

- Generator:kW rating, voltage, rated current, frequency, number of phases, power factor
- Batteries: type, voltage, capacity, conductor protection (when required)
- Motors: kW rating, remote stops (when required)
- Transformers: kVA rating, rated voltage and current on primary and secondary side, connection method

  The one line diagram for power supply and distribution systems is also to include a list of sequential start of motors and equipment having emergency tripping or preferential tripping features.

2.1.2 Short-circuit Data .

Calculations of prospective short circuit current of main bus bars and secondary side of transformers (Additionally, load schedule is to be submitted for information), Maximum calculated short-circuit current values, both symmetrical and asymmetrical values, available at the main and emergency switchboards and distribution boards, Rated breaking and making capacities of the protective devices.

Reference may be made to IEC Publication 61363-1 Electrical Installations of Ships and Mobile and Fixed Offshore Units – Part 1: Procedures for Calculating Short-Circuit Currents in Three-Phase A.C.

2.1.3 Protective Device Coordination study

This is to be an organized time-current study of all protective devices, taken in series, from the utilization equipment to the source, under various conditions of short circuit. The time-current study is to indicate settings of long-time delay tripping, short-time delay tripping, and instantaneous tripping, as applicable. Where an over current relay is provided in series and adjacent to the circuit protective devices, the operating and time-current characteristics of the relay are to be considered for coordination. Typical thermal withstanding capacity curves of the generators are to be included, as appropriate

2.1.4 Load Analysis

An electric-plant load analysis shall be submitted for review. The electric-plant load analysis is to cover all operating conditions of the vessel, such as normal sea going, cargo handling (loading/unloading), harbor in/out and emergency operations.

The analyses are to include:

- The simultaneous operation of loads on the emergency switchboard as per Chapter 6 Sect 2[2.3.2] Where the emergency generator capacity is less than the sum of all of the entire nameplate rated loads, which can be simultaneously connected to the emergency switchboard, then the analysis is to be supported by a justification for each reduced or non-simultaneous load used.
- High voltage ship service transformers or converters, where applicable per Chapter 6 Sect 2[2.4.1.6]
- Identifying the loads to be tripped to ensure continuity of supply per Chapter 6 Sect 2[2.2.2.2]iv), Chapter 6 Sect 2[2.2.1.6] a), Chapter 6 Sect 2[2.5.2.3]

2.2 Ship Service Main Source of Power

2.2.1 Power Supply by Generators

2.2.1.1 Number of Generators

All oceangoing and Great Lakes vessels using electricity for ship's service power or light shall be provided with at least two electric generators for the ship service electrical demand.

2.2.1.2 Capacity of Generators

The capacity of the generating sets shall be such that in the event of any one generating set being stopped, it will still be possible without recourse to the emergency source of power to supply those services necessary to provide normal operational conditions of propulsion and safety, preservation of the cargo and minimum comfortable conditions of habitability, which are to include at least adequate services for cooking, heating, domestic refrigeration, mechanical ventilation, sanitary and fresh water and the electric power critical notations listed in Chapter 6 Sect 1[1.3] and Ch6 Sect 2[2.2.1.6]

In addition, the generating sets shall be such that with any one generator or its primary source of power out of operation, the remaining generating sets are capable of providing the electrical services necessary to start the main propulsion plant in conjunction with other machinery, as appropriate, from a dead ship condition,as defined in Chapter 1 Sect 1[1.7.11] within thirty minutes of the blackout. Refer Chapter 6,Sect 2[2.2.1.3]

2.2.1.3 Starting from Dead Ship Condition

In restoring the propulsion from a dead ship condition Refer Chapter 1 Sect 1[1.7.11]no stored energy shall be assumed available for starting the propulsion plant, the main source of electrical power and other essential auxiliaries. It is assumed that means are available to start the emergency generator at all times.

The emergency source of electrical power may be used to restore the propulsion, provided its capacity either alone or combined with that of any other available source of electrical power is sufficient to provide at the same time those services required to be supplied in Chapter 6 Sect 2[2.3.2.2] to 2.3.2.3]

The emergency source of electrical power and other means needed to restore the propulsion are to have a capacity such that the necessary propulsion starting energy is available within 30 minutes of blackout, as defined in Chapter 1 Sect 1[1.7.12]. Emergency generator-stored starting energy shall not to be directly used for starting the propulsion plant, the main source of electrical power and/or other essential auxiliaries (emergency generator excluded).

2.2.1.4 Power Supplied by Propulsion Generator

For vessels propelled by electric power and having two or more constant voltage propulsion generators, the ship's service electric power may be derived from this source and additional ship's service generators need not be fitted ,provided that with one propulsion generator out of service ,a speed of seven knots or one-half of the design speed,whichever is lesser shall be maintained..Refer Chapter 6 Sect 5[5.2.9.4] and [5.2.9.5]

2.2.1.5 Fuel Capacity for Generator Prime Mover

Where the fuel for any ship's service generator prime mover differs from the fuel for the main propulsion plant, adequate fuel capacity for that ship's service generator prime mover with adequate margins shall be provided for the longest anticipated run of the vessel between fueling ports.

2.2.1.6 System Arrangement

2.2.1.6(a) General. For vessels of 500 GT and above where the main source of electrical power is necessary for propulsion and steering and the safety of the vessel, the system shall be so arranged that the electrical supply to equipment necessary for these services is maintained or is capable of being restored in the case of loss of any one of the generators in service in accordance with the provision in Chapter 6 Sect 2[2.2.1.6]b) or Sect 2[2.2.1.6]c).

Load shedding of nonessential services and, where necessary, secondary essential services Refer Chapter 6 Sect 1[1.2.4]or other arrangements as may be necessary shall be provided to protect the generators against the sustained overload. For main bus bar subdivision Refer Chapter 6 Sect 4[4.4.8.2]

2.2.1.6(b) Single Generator Operation. Where the electrical power is normally supplied by a single generator, provision shall be made upon loss of power for automatic starting and connecting to the main switchboard of a stand-by generator(s) of sufficient capacity with automatic restarting of the essential auxiliaries in sequential operation, if necessary to permit propulsion and steering and to ensure the safety of the vessel. Starting and connection to the main switchboard of the standby generator shall be preferably within 30 seconds after loss of the electrical power supply, but in no case in more than 45 seconds.

2.2.1.6(c) Multiple Generator Operation. Where the electrical power is normally supplied by more than one generator set simultaneously in parallel operation, the system shall be so arranged that in the event of the loss of any one of the generators in service, the electrical supply to equipment necessary for propulsion and steering and to ensure the safety of the vessel will be maintained by the remaining generator(s) in service.

2.2.2 Generator Driven by Propulsion *machinery*

2.2.2.1 Constant Speed Drive

A generator driven by a main propulsion unit (shaft generator) capable of operating continuously at a constant speed , e.g.,those fitted with controllable-pitch propellers, may be considered one of the generators required by Chapter 6 Sect 2[2.2.1.1] provided that the arrangements stated in *i)* to *iii)* below are complied with:

i) The generator and the generating systems are capable of maintaining the voltage and frequency variation within the limits specified in Chapter 6 Sect 4[4.2.11.2] and Chapter 6 Sect 1 Table 6.1.1 under all weather conditions during sailing or maneuvering and also while the vessel is stopped.

ii) The rated capacity of the generator and the generating systems is safeguarded during all operations given under *i)* and is such that the services required by Chapter 6 Sect 2[2.2.1.2] can be maintained upon loss of any generator in service.

iii) An arrangement is made for starting a standby generator and connecting it to the switchboard, in accordance with Chapter 6 Sect 2[2.2.1.6]

2.2.2.2 Variable Speed Drive

Shaft generator installations not capable of operating continuously at a constant speed may be used for normal operational and habitable conditions of the vessel, provided that the arrangements stated in *i)* to *v)* below are complied with. This type of generator will not be counted as one of the generators required by Chapter 6 Sect 2[2.2.1.2]

i) In addition to this type of generator, generators of sufficient and adequate rating are provided, which constitute the main source of electrical power required by Chapter 6 Sect 2[2.2.1.2]

ii) When the frequency variations at the main bus bar exceed the following limits due to the speed variation of the propulsion machinery which drives the generator, arrangements are made to comply with Chapter 6 Sect 2[2.2.1.6]

Permanent frequency variation: ± 5.5%

Transient frequency variation:±11%(5sec)

iii) The generators and the generating systems are capable of maintaining the voltage and frequency variation within the limits specified in Chapter 6 Sect 4[4.2.11.2] Chapter 6 Sect 1 Table 6.1.1

iv) Where load-shedding arrangements are provided, they are fitted in accordance with Chapter 6 Sect 2[2.5.2.3]

v) Where the propulsion machinery is capable of being operated from the navigation bridge, means are provided or procedures are in place to ensure that power supply to essential services is maintained during maneuvering conditions in order to avoid a blackout situation

2.2.3 Sizing of AC Generator

In selecting the capacity of an alternating-current generating plant, particular attention shall be given to the starting current of motors forming part of the system. Under the normal seagoing condition of the vessel with one generator held in reserve as a standby, the remaining generator sets, operating in parallel and initially carrying the minimum load necessary for operating the vessel, are to have sufficient capacity with respect to the largest idle motor on the vessel so that the motor can be started and the voltage drop occasioned by its starting current will not cause any already running motor to stall or control equipment to drop out.

2.3 Emergency Source of Power

2.3.1 General

A self-contained emergency source of electrical power shall be provided.

2.3.1.1 Location

The emergency source of electrical power and associated transforming equipment, if any, transitional source of emergency power, the emergency switchboard, the emergency lighting switchboard and the fuel oil tank for the emergency generator prime mover shall be located above the uppermost continuous deck outside of the machinery casing, and shall be readily accessible from the open deck. They are not to be located forward of the collision bulkhead.

2.3.1.2 Separation

2,3.1.2(a) Machinery Space of Category A. The location of the emergency source of electrical power, its associated transforming equipment, if any, and the emergency switchboard, and the transitional source of emergency power (if required) shall be such that a fire or other casualty in the space containing the main source of electrical power, its associated transforming equipment, if any, and the main switchboard, or in any machinery space of category A will not interfere with the supply, control and distribution of emergency electrical power. As far as practicable, the space containing the emergency source of electrical power, associated transforming equipment, if any, the transitional source of emergency electrical power and the emergency switchboard, including trunks to such spaces, are not to be contiguous to the boundaries of machinery spaces of category A or those spaces containing the main source of electrical power, associated transforming equipment, if any, and the main switchboard.

2.3.1.2(b) Machinery Space Other Than Category A. Spaces containing emergency sources of power shall be separated from machinery spaces (as defined in Chapter 1 Sect 1[1.7.2] other than Category A machinery spaces, by a boundary insulated to a level of not less than A-15 for bulkheads and decks and A-0 for the overhead from any such space (including trunks to such spaces). Where the emergency source of power is a generator, the above shall not intended to preclude the location of the emergency generator in the same space as its prime mover, regardless of size.

2.3.1.2(c) Alternative Arrangement : The following alternative arrangements may be considered in lieu of Sect 2 [2.3.1.2](a):

i) Separation by a cofferdam having dimensions as required for ready access and extending at least 150 mm (6 in.) beyond the boundaries of the space containing the self-contained emergency source of power and its associated equipment as

stated in Sect [2.3.1.2](a). Refer Figure 6.2.1 below. Except for cables feeding services located in the machinery space, emergency electric cables are not to be installed in such cofferdams unless the cofferdam is insulated to A-60.

FIGURE -6.2.1

Cofferdam with Extension Beyond the Boundaries of the Space Containing the Emergency Source

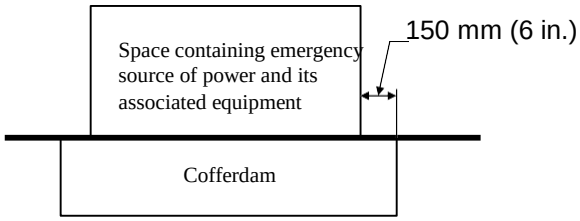

Category A Machinery Space

ii) Separation by a cofferdam having dimensions as required for ready access between category A machinery space and the space containing the self-contained emergency source of power and its associated equipment as stated in Sect 2[2.3.1.2](a) without extension beyond the boundaries. Any contiguous lines between these spaces at the corner of the cofferdam shall be insulated to A-60 for a length of 450 mm (18 in.) at the category A machinery space side. Refer Figure 6.2.2 below.

FIGURE 6.2.2

Cofferdam without Extension Beyond the Boundaries of the Space Containing the Emergency Source

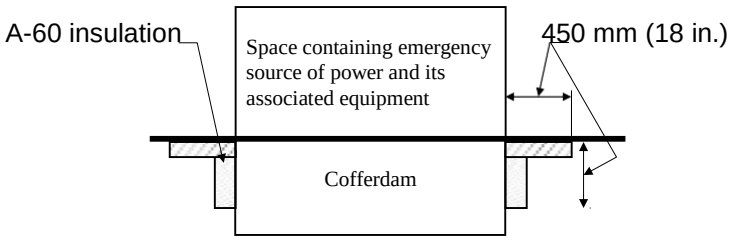

Category A Machinery Space

iii) The contiguous boundaries insulated to A-60 with the insulation extending at least 450 mm (18 in.) beyond the boundary of the space containing the self-contained emergency source of power and its associated equipment as stated in Sect 2[2.3.1.2](a). Refer Figure 6-2-3 below.

The arrangements indicated in Figure 6-2-3 below can be considered only when it can be shown that the arrangements are in compliance with the requirements of the flag Administration.

FIGURE 6-2-3

Boundary Insulated to A-60 with the Insulation Extending Beyond the Boundaries of the Space Containing the Emergency Source

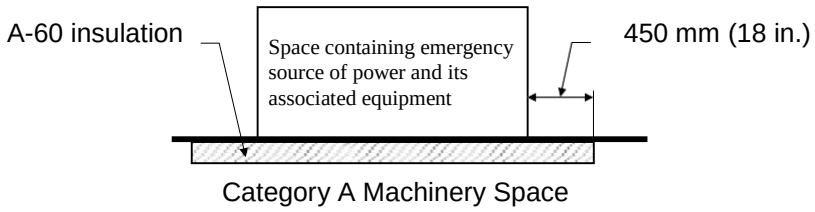

2.3.2 Emergency Services

2.3.2.1 General

i) The electrical power available from the emergency source shall be sufficient to supply all those services that are essential for safety in an emergency, due regard being paid to such services as may have to be operated simultaneously. Where the sum of the loads on the emergency generator switchboard exceeds the power available, an analysis demonstrating that the power required to operate the services simultaneously shall be produced. The analysis shall be submitted for review in support of the sizing of the emergency generator.

ii) The emergency source of electrical power shall be capable, having regard to starting currents and the transitory nature of certain loads, of supplying simultaneously at least the services listed in Chapter 6 Sect 2[2.3.2.2] through Sect 2[2.3.2.8] for the period specified.

2.3.2.2 Lighting Systems and Navigation Light

2.3.2.2(a) Emergency Lighting for 3 hours

For a period of three hours, emergency lighting at every survival craft preparation station, muster and embarkation station and over the sides. Remotely located stations for a life raft installed in accordance with SOLAS 1974 as amended, CHAPTER III/B, Regulation 31.1.4 that is provided with portable means of illumination acceptable to the National Administration with which the Ship is registered may be considered to satisfy this requirement

2.3.2.*2(b) For a period of 18 hours ,emergency lighting*

i) In all service and accommodation alleyways, stairways and exits, personnel elevators and personnel lift trunks;

ii) In the machinery spaces and main generating stations, including their control positions;

iii) In all control stations, machinery control rooms, and at each main and emergency switchboard;

iv) At all stowage positions for firemen's outfits;

v) At the steering gear; and

vi) At the fire pump , at the sprinkler pump, if any, and at the emergency bilge pump, if any, and at the starting positions of their motors.

vii). In all cargo pump rooms of tankers.

2.3.2.2(c) For period of 18 hours:

i) Navigation lights and other lights required by the International Regulation for Preventing Collisions at Sea in force.

ii). The radio communications, as required by Amendments to SOLAS 1974, Chapter IV.

2.3.2.3 Communication System, Navigation Aid, and Alarm Systems

For a period of 18 hours:

2.3.2.3(a) VHF radio installation required by Regulation IV/7.1.1 and IV/7.1.2 of SOLAS 1974, as amended; and if applicable:

2.3.2.4 The MF radio installation required by Regulation IV/9.1.1, IV/9.1.2, IV/10.1.2 and IV/10.1.3 of SOLAS 1974 as amended

2.3.2.5 The ship earth station required by Regulation IV/10.1.1 of SOLAS 1974 as amended

2.3.2.6 The MF/HF radio station required by Regulation IV/10.2.1, IV/10.2.2 and IV/11.1 of SOLAS 1974 as amended.

2.3.2.3(b) All internal communication equipment as required in an emergency

2.3.2.3(c) Ship borne navigational equipment (i.e., radar, gyro compass, etc.), as required by Regulation V/12 of SOLAS 1974 as amended except that where such provision is unreasonable or impracticable for vessels less than 5,000 GT, this may be waived if evidence of approval by the Administration is submitted.

2.3.2.3(d) Required fire detection and fire alarm systems

2.3.2.3(e) Intermittent operation of the daylight signaling lamp, the ship's whistle, manually operated call points and other internal signals that are required in an emergency, unless such services have an independent supply for the period of 18 hours from an accumulator battery suitably located for use in an emergency.

2.3.2.4 Emergency Fire Pump

For period of 18 hours, one of the fire pumps required Sect 2[2.3.2] of above if dependent upon the emergency generator for its source of power.also Chapter 5 Sect 2[2.3.2]

2.3.2.5 Steering Gear

Steering gear to comply with Part 5B- Chapter 6.Sect 2/[2.6.2] ,Chapter 6,Sect 2[2.3.2.5] of this sect if powered from emergency source for a period of 10 minutes continuous operation on vessels of less than 10,000 GT.

2.3.2.6 Emergency Control and Monitoring Systems

Emergency control monitoring systems, as required by Chapter 7 Sect 4[4.6]

2.3.2.7 Vessels on Short Duration Voyages

In a vessel engaged regularly in voyages of short duration where an adequate standard of safety is attained, a lesser period than the 18 hour period specified in Chapter 6 Sect 2[2.3.2.2] b) , Chapter 6 Sect 2[2.3.2.2] c) , Chapter 6 Sect 2[2.3.2.3] , respectively , but not less than 12 hours may be accepted.

2.3.2.8 Other Emergency Services

For a period of 30 minutes for the following:

i) Free-fall lifeboat secondary launching appliance, if the secondary launching appliance shall not dependent on gravity, stored mechanical power or other manual means, and

ii) Power-operated watertight door, as required by Part 6,Chapter 2, Sect 3/[3.3.1.6 (a)]

2.3.3 Power Supply

2.3.3.1 General

The emergency source of electrical power may be either a generator or an accumulator battery, in accordance with : Sect 2[2.3.2.2] or Sect2 [2.3.3.3 below

2.3.3.2 Generator

Where the emergency source of electrical power is a generator, it shall be:

2.3.3.2(a) Driven by a prime mover with an independent supply of fuel having a flashpoint (closed cup test) of not less than 43°C (110°F), and

2.3.3.2(b)

i) Started automatically upon failure of the main source of electrical power supply and connected automatically to the emergency switchboard – then, those services referred to in Chapter 6 Sect 2[2.3.4] shall be connected automatically to the emergency generator as quickly as is safe and practicable, subject to a maximum of 45 seconds, or

ii) Provided with a transitional source of emergency electrical power, as specified in Chapter 6 Sect 2[2.3.4] unless an emergency generator is provided capable both of supplying the services referred to in Chapter 6 Sect 2[2.3.4] of being automatically started and supplying the required load as quickly as is safe and practicable, subject to a maximum of 45 seconds, and

2.3.3.2(c) An adequate fuel capacity for the emergency generator prime mover shall be provided.

Where it is intended to use fuel with a flash point of less than 60°C (140°F) then details of the precautions used to address the associated hazardous area issues shall be submitted to INTLREG for review .Refer also Chapter 4 Sect 4[4.4]

2.3.3.3 Accumulator Battery

Where the emergency source of electrical power is an accumulator battery, it shall be capable of:

2.3.3.3(a) Carrying the emergency electrical load without recharging while maintaining the voltage of the battery throughout the discharge period within 12% above or below its nominal voltage;

2.3.3.3(b) Automatically connecting to the emergency switchboard in the event of failure of the main source of electrical power; and

2.3.3.3(c) Immediately supplying at least those services specified in Chapter 6 Sect 2[2.3.4]

2.3.3.4 Emergency Generator for Non-emergency Services

Provided that suitable measures are taken for safeguarding independent emergency operation under all circumstances, the emergency generator may be used, exceptionally, and for short periods, to supply non-emergency circuits during the blackout situation , dead ship condition . The generator shall be safeguarded against overload by automatically shedding such non-emergency services so that supply to the required emergency loads is always available. Refer Chapter 6 Sect 3/[3.1.5] Chapter 6 Sect 2[2.3.5.5]

Use of the emergency generator in port, Refer Chapter 6 Sect 2[2.3.9]

To prevent the generator or its prime mover from getting overloaded when used in port, arrangements are to be provided to shed sufficient non-emergency loads to ensure its continued safe operation.

The prime mover is to be arranged with fuel oil filters and lubrication oil filters, monitoring equipment and protection devices as requested for the prime mover for main power generation and for unattended operation.

The fuel oil supply tank to the prime mover is to be provided with a low level alarm, arranged at a level ensuring sufficient fuel oil capacity for the emergency services for the period of time as required in Part 6- Chapter 2-Sect 3 [3.3.] & [3.4.]

The prime mover is to be designed and built for continuous operation and should be subjected to a planned maintenance scheme ensuring that it is always available and capable of fulfilling its role in the event of an emergency at sea.

Fire detectors are to be installed in the location where the emergency generator set and emergency switchboard are installed.

Means are to be provided to readily change over to emergency mode from harbor mode.

Control, monitoring and supply circuits for the purpose of the use of the emergency generator in port are to be so arranged and protected that any electrical fault will not influence the operation of the main and emergency services.

When necessary for safe operation, the emergency switchboard is to be fitted with switches to isolate the circuits.

Operational instructions (such as fuel oil tank level, harbor/seagoing mode changeover arrangements, etc.) are to be provided on board. Before the ship is under way, all control devices (e.g. valves, switches) are in a correct position for the independent emergency operation of the emergency generator set and emergency switchboard. Such instructions are to be distinctly posted at the emergency generator room.

2.3.4 Transitional Source of Power

The transitional source of emergency electrical power, where required by Chapter 6 Sect 2[2.3..3.2] b) ii) is to consist of an accumulator battery suitably located for use in an emergency which is to operate without recharging while maintaining the voltage of the battery throughout the discharge period within 12% above or below its nominal voltage and be of sufficient capacity and be so arranged as to supply automatically in the event of failure of either the main or the emergency source of electrical power for half an hour at least the following services if they depend upon an electrical source for their operation:

i) The lighting required by Chapter 6 Sect 2[2.3.2.2] For this transitional phase, the required emergency electric lighting, in respect of the machinery space and accommodation and service spaces, may be provided by permanently fixed, individual, automatically charged, relay operated accumulator lamps; and

ii) All services required by Chapter 6 Sect 2[2.3.2.3]b), Chapter 6 Sect 2[2.3.2.3]d), and Chapter 6 Sect 2[2.3.2.3]e), unless such services have an independent supply for the period specified from an accumulator battery suitably located for use in an emergency.

2.3.5 Emergency Switchboard

2.3.5.1 General

The emergency switchboard shall be installed as near as is practicable to the emergency source of electrical power.

2.3.5.2 Emergency Switchboard for Generator

Where the emergency source of electrical power is a generator, the emergency switchboard shall be located in the same space unless the operation of the emergency switchboard would thereby be impaired.

2.3.5.3 Accumulator Battery

No accumulator battery fitted in accordance with Chapter 6 ,Sect 2[2.3.3.3] and Sect 2[[2.3.4] shall be installed in the same space as the emergency switchboard. An indicator shall be mounted on the main switchboard or in the machinery control room to indicate when these batteries are being discharged.

2.3.5.4 Interconnector Feeder Between Emergency and Main Switchboards

The emergency switchboard shall be supplied during normal operation from the main switchboard by an interconnector feeder which shall be protected at the main switchboard against overload and short circuit. The interconnector feeder shall be disconnected automatically at the emergency switchboard upon failure of the main source of electrical power. Where the system is arranged for feedback operation, the interconnector feeder is also to be protected at the emergency switchboard against short circuit. In addition, the circuit protection device at the emergency switchboard on the interconnector feeder is to trip to prevent overloading of the emergency generator.

In designs where the main switchboard voltage is different from that of the emergency switchboard the power to the emergency switchboard shall be supplied from the main ship service switchboard.

As far as practicable, the circuit coordination shall be arranged such that the outgoing circuits from the main ship service switchboard will coordinate with the transformer circuit breakers to prevent the supply to the emergency switchboard from being unavailable due to a fault on one of the other outgoing circuits from the main ship service switchboard.

*Note:*For the purpose of this Rule, the main ship service switchboard is a switchboard which is connected to the secondary of the step-down transformer producing the required voltage.

2.3.5.5 Disconnection of Non-emergency Circuits

For ready availability of the emergency source of electrical power, arrangements shall be made, where necessary, to disconnect automatically non-emergency circuits from the emergency switchboard so that electrical power shall be available automatically to the emergency circuits.

2.3.6 Arrangements for Periodic Testing

Provision shall be made to enable the periodic testing of the complete emergency system and is to include the testing of automatic starting arrangements.

2.3.7 Vessels Intended to Carry Passengers

Refer Part 7 B/Chapter 2 of the *INTLREG Rules for Building and Classing Steel Vessels*.

2.3.8 Starting Arrangements for Emergency Generator Sets

2.3.8.1 Cold Conditions

Emergency generating sets shall be capable of being readily started in their cold condition at a temperature of 0°C (32°F). If this is not practicable or if lower temperatures are likely to be encountered, heating arrangements shall be provided for ready starting of the generating sets.

2.3.8.2 Number of Starts

Each emergency generator that is arranged to be automatically started shall be equipped with approved starting devices approved by INTLREG with a stored energy capability of at least three consecutive starts. Unless a second independent means of starting is provided, the source of stored energy shall be protected to preclude critical depletion by the automatic starting system, i.e., the automatic starting system is only allowable for consumption of the stored energy source to a level that would still provide the capability for starting the emergency generator upon intervention by personnel. In addition, a second source of energy shall be provided for an additional three starts within 30 minutes unless manual starting can be demonstrated to the Surveyor to be effective.

2.3.8.3 Stored energy for starting

The stored energy shall be maintained at all times, as follows:

2.3.8.3(a) Electrical and hydraulic starting systems shall be maintained from the emergency switchboard;

2.3.8.3(b) Compressed air starting systems may be maintained by the main or auxiliary compressed air receivers through a suitable non-return valve or by an emergency air compressor which, if electrically driven, is supplied from the emergency switchboard;

2.3.8.3(c) All of these starting, charging and energy storing devices shall be located in the emergency generator space. These devices are not to be used for any purpose other than the operation of the emergency generating set. This does not preclude the supply to the air receiver of the emergency generating set from the main or auxiliary compressed air system through the non-return valve fitted in the emergency generator space.

2.3.8.4 Manual Starting

Where automatic starting not required, as per Chapter 6 Sect 2[2.3..3.2] b) ii) manual (hand) starting is permissible, such as manual cranking, inertia starters, manually charged hydraulic accumulators or power charge cartridges, where they can be demonstrated to the Surveyor as being effective.

When manual (hand) starting shall not practicable, the requirements of Sect 2[2.3.8.2] and [2.3.8.3 above shall be complied with, except that starting may be manually initiated.

2.3.9 Use of Emergency Generator in Port (for Vessel 500 GT and Over)

Unless instructed otherwise by the flag Administration, the emergency generator may be used during lay time in port for supplying power to the vessel, provided the following requirements are complied with.

2.3.9.1 Arrangements for the Prime Mover

2,3.9.1(a) Fuel oil tank. The fuel oil tank for the prime mover shall be appropriately sized and provided with a level alarm, which shall be set to alarm at a level where there is still sufficient fuel oil capacity for the emergency services for the period of time required by Chapter 6 Sect 2[2.3.2]

2.3.9.1(b) Rating. The prime mover shall be rated for continuous service.

2.3.9.1(c) Filters. The prime mover shall be fitted with fuel oil and lubricating oil filters, in accordance with Chapter 2 Sect 1[1.4.1] and Ch 2 Sect 1[1.5.5].

2.3.9.1(d) Monitoring. The prime mover shall be fitted with alarms, displays and automatic shutdown arrangements, , except that for fuel oil tank low-level alarm. The displays and alarms shall be provided in the centralized control station. Monitoring at the engineers' quarters shall be provided as required in Chapter 7 Sect 4[4.16]

2.3.9.1(e) Fire detection. The emergency generator room shall be fitted with fire detectors. Where the emergency generator is located in a space separated from the emergency switchboard, fire detectors shall be located in each space. The fire detection and alarm system shall be in compliance with Chapter 5 Sect 2[2.12] and shall be a part of another system.

2.3.9.2 System Arrangements

2.3.9.2(a) Independence. The power supply circuits, including control and monitoring circuits, for the use of the emergency generator in port shall be so arranged and protected that any electrical fault, except for the emergency generator and the emergency switchboard, will not affect the operation of the main and emergency services.

2.3.9.2(b) Changeover arrangement. Means shall be provided to readily change over to emergency operation.

2.3.9.2(c) Overload prevention. The generator shall be safeguarded against overload by automatically shedding such other loads so that the supply to the required emergency loads is always available.

2.3.9.3 Operational Instruction

Operational instructions, such as that on fuel oil tank level, harbor/seagoing mode changeover arrangements, etc., shall be provided onboard. Before the vessel is underway, all valves, switches, etc. shall be in the positions for their intended mode of operation of the emergency generator and the emergency switchboard. Such instructions shall be distinctly posted at the emergency generator room. Planned maintenance shall be carried out only while in port.

2.3.10 Alarms and Safeguards for Emergency Diesel Engines

2.3.10.1 Information to be Submitted

Information demonstrating compliance with these requirements shall be submitted for review. The information is to include instructions to test the alarm and safety systems.

2.3.10.2 Alarms and Safeguards

2.3.10.2(a) Alarms and safeguards shall be fitted in accordance with Chapter 6 Sect 2 , Table 6.2.1

2.3.10.2 (b) The safety and alarm systems shall be designed to 'fail safe'. The characteristics of the 'fail safe' operation shall be evaluated on the basis not only of the system and its associated machinery, but also the complete installation, as well as the ship.

2.3.10.2 (c) Regardless of the engine output, if shutdowns additional to those specified in Chapter 6 Sect 2 Table 6.2.1 are provided, except for the over speed shutdown, they shall be automatically overridden when the engine is in automatic or remote control mode during navigation.

2.3.10.2 (d) The alarm system is to function in accordance with Chapter 7 Sect 2[2.3.1] through Chapter 7 Sect 2[2.3.7] with additional requirements that grouped alarms shall be arranged on the bridge.

2.3.10.2 (e) In addition to the fuel oil control from outside the space, a local means of engine shutdown shall be provided.

2.3.10.2 (f) Local indications of at least those parameters listed in Table 6.2.1

shall be provided within the same space as the diesel engines and are to remain operational in the event of failure of the alarm and safety systems.

TABLE 6.2.1: Alarms and safeguards for emergency diesel engines

Parameter	≥ 220 kW	< 220 kW
Fuel oil leakage from fuel injection pipes	Alarm activated	Alarm activated
Lubricating oil temperature	Alarm for high value	
Lubricating oil pressure	Alarm for low value	Alarm for low value
Oil mist concentration in crankcase (Refer Note 1)	Alarm for high value	
Pressure or flow of cooling water	Alarm for low value	
Temperature of cooling water (or cooling air)	Alarm for high value	Alarm for high value
Over-speed activated	Alarm activated + Shutdown	
Note 1: For engines having a power of more than 2250 kW or a cylinder bore of more than 300 mm.		

2.3.11 Vessels Less than 500 GT Having Electrical Plants of 75 kW and Above

2.3.11.1 General

This requirement is intended for vessels less than 500 GT having electrical plants of an aggregate capacity of 75 kW and above. The emergency source of electrical

power shall be self-contained and readily available.Chapter 6 Sect 2[2.3.1.1],Sect 2[2.3.1.2],Sect 2[2.3.3] through Chapter 6 Sect 2[2.3.7] and Sect 2[2.3.12] are applicable. Where the source of electrical power is a battery, Refer Chapter 6 Sect 3[3.2.4] for the installation. For emergency lighting, a relay-controlled, battery-operated lantern is acceptable.

2.3.11.2 Capacity

The emergency source of electrical power shall be capable of supplying simultaneously at least the following services for the period as specified herein:

2.3.11.2(a) Emergency lighting for two hours:

i) At muster and embarkation stations for survival craft

ii) At survival craft, their launching appliances and the area of water into which they are launched

2.3.11.2 (b) Emergency lighting for six hours:

i) In all service and accommodation alleyways, stairways and exits, personnel elevators and shafts;

ii) In the machinery spaces and main generating stations, including their control positions;

iii) In all control stations, machinery control rooms, and at each main and emergency switchboard;

iv) At all stowage positions for firemen's outfits;

v) At the steering gear; and

2.3.11.2 (c) Navigation lights and other lights required by the International Regulation for Preventing Collisions at Sea in force.

2.3.11.2 (d) Radio installations for calling distress signals and rescue for six hours

2.3.11.2 (e) Internal communication equipment, as required in an emergency for six hours.

2.3.12 Requirements by the Governmental Authority

Attention is directed to the requirements of the governmental authority of the country whose flag the vessel flies for the emergency services and the accumulator batteries required in various types of vessels.

2.4 Distribution System

2.4.1 Ship Service Distribution System

2.4.1.1 General

Current-carrying parts with potential to earth shall be protected against accidental contact.

For recognized standard distribution systems, Refer Chapter 6,Sect 1[1.5] Separate feeders shall be provided for essential and emergency services.

2.4.1.2 Method of Distribution

The output of the ship's service generators may be supplied to the current consumers by way of either branch system, meshed network system or ring main system. The cables of a ring-main or other looped circuit (e.g., interconnecting section boards in a continuous circuit) shall be formed of conductors having sufficient current-carrying and short-circuit capacity for any possible load and supply configuration

2.4.1.3 Through-feed Arrangements

The size of feeder conductors shall be uniform for the total length, but may be reduced beyond any intermediate section board and distribution board, provided that the reduced size section of the feeder is protected by an overload device.

2.4.1.4 Motor Control Center

Feeder cables from the main switchboard or any section board to the motor control centers are to have a continuous current-carrying capacity not less than 100% of the sum of the nameplate ratings of all of the motors supplied. Feeder cables of lesser current capacity are permitted, where the design is such that connected consumers are not operated simultaneously, under any operating mode.

2.4.1.5 Motor Branch Circuit

A separate circuit shall be provided for each fixed motor having a full-load current rating of 6 amperes or more, and the conductors are to have a carrying capacity of not less than 100% of the motor full-load current rating. No branch circuit is to have conductors less than 1.5 mm^2 wire.

2.4.1.6 Power Supply Through Transformers and Converters

2.4.1.6(a) Continuity of Supply- Where transformers and/or converters form a part of the vessel's electrical system supplying essential services and services necessary for minimum comfortable conditions of habitability, the number and capacity of the transformers and/or converters shall be such that with any one transformer or converter or any one single phase of a transformer out of service, the remaining transformers and/or converters or remaining phases of the transformer are capable of supplying power to these loads under normal seagoing conditions.

Refer Chapter 6 Sect 5[5.1.2.6] for the additional requirements applicable for high voltage transformers.

2.4.1.6(b) Arrangements . Each required transformer shall be located as a separate unit with separate enclosure or equivalent, and shall be served by separate circuits on the primary and secondary sides. Each of the secondary circuits shall be provided with a multipole isolating switch. This multipole isolating switch shall not to be installed on the transformer casing or its vicinity (in so far as practicable), to preclude its damage by fire or other incident at the transformer. A circuit breaker provided in the secondary circuit, will be acceptable in lieu of a multipole isolating switch. Refer Chapter 6 Sect 2[2.8.1]

2.4.1.6(c) Transformers and Converters for Battery Charger - Where batteries connected to a single battery charger are the sole means of supplying DC power to equipment for essential services, as defined in Chapter 6 Sect 1[1.2.4] failure of the single battery charger under normal operating conditions should not result in total loss of these services once the batteries are depleted. In order to ensure continuity of the power supply to such equipment, one of the following arrangements shall be provided:

1. Duplicate battery chargers; or
2. A single battery charger and a transformer/rectifier (or switching converter) which is independent of the battery charger, provided with a change-over switch; or
3. Duplicate transformer/rectifier (or switching converter) units within a single battery charger, provided with a change-over switch.

The above requirements are not applicable for the following:

- The equipment for the essential services which contains a single transformer/rectifier with a single AC power supply feeder to such equipment.
- The services which are not used continuously, such as battery chargers for engine starting batteries, etc.

2.4.1.7 Ventilation System

Ventilation fans for cargo space are to have feeders separate from those for accommodations. Refer Chapter 6 Sect2[2.10.1], Sect 3[3.2.4.3], Sect 6[6.1.7.1],Sect 6[6.1.9.1] and Sect 6[6.4.2.1]

2.4.1.8 Heating Appliances

Each heater shall be connected to a separate final subcircuit. However, a group of up to 10 heaters whose total current does not exceed 16 A may be connected to a single final sub-circuit.

2.4.1.9 Circuits for Bunker or Cargo Space

All lighting and power circuits terminating in a bunker or cargo space shall be provided with a multiple pole switch outside of the space for disconnecting such circuits.

2.4.2 Hull Return System

2.4.2.1 General

2.4.2.1(a) All Vessels. The hull return system shall not to be used for any purpose in a tanker, or for power, heating or lighting in other type of vessels, except that the following systems may be used for all types of vessels.

i) Impressed current cathodic protective systems;

ii) Limited and locally earthed systems, provided that any possible resulting current does not flow directly through any hazardous areas; or

iii) Insulation level monitoring devices, provided the circulation current does not exceed 30 mA under all possible conditions.

Current-carrying parts with potential to earth shall be protected against accidental contact.

2.4.2.1(b) Tankers. In addition to the above, also Refer Chapter 6 Sect 6[6.1.2]

2.4.2.2 Final Sub-circuits and Earth Wires

Where the hull return system is used, all final subcircuits (i.e., all circuits fitted after the last protective device) are to consist of two insulated wires, the hull return being achieved by connecting to the hull one of the bus bars of the distribution board from which they originate. The earth wires shall be in accessible locations to permit their ready examination and to enable their disconnection for testing of insulation.

2.4.3 Earthed Distribution Systems

System earthing shall be effected by means independent of any earthing arrangements of the non-current- carrying parts. Means of disconnection shall be provided in the neutral earthing connection of each generator so that the generator may be disconnected for maintenance or insulation resistance measurements. In distribution systems with neutral earthed or for generators intended to be run with neutrals interconnected, the machines are to be designed

to avoid circulating currents exceeding the prescribed value. Transformer neutral is not to be earthed unless all corresponding generator neutrals are disconnected from the system (e.g. during shore supply).Refer Chapter 6 Sect 3[3.4.3.2] and Chapter 6 Sect 6[6.1.2] for tankers.

2.4.4 External or Shore Power Supply Connection

2.4.4.1 General

Where arrangements are made for the supply of electricity from a source on shore or other external source, a termination point shall be provided on the vessel for the reception of the flexible cable from the external source. Fixed cables of adequate rating shall be provided between the termination point and the main or emergency switchboard. Means for disconnecting the external or shore power supply shall be provided at the receiving switchboard.Chapter 6 Sect 2[2.5.6] for the protection of external or shore power supply circuit.

2.4.4.2 Earthing Terminal

An earth terminal shall be provided for connecting the hull to an external earth.

2.4.4.3 Indicators

The external supply connection or shore connection shall be provided with a pilot lamp and a voltmeter (and frequency meter for AC) at main or emergency switchboard to show energized status of the cable.

2.4.4.4 Polarity or Phase Sequence

Means shall be provided for checking the polarity (for DC) or the phase sequence (for three-phase AC) of the incoming supply in relation to the vessel's system.

2.4.4.5 Information Plate

An information plate shall be provided at or near the connection box giving full information on the system of supply and the nominal voltage (and frequency if AC) of the vessel's system and the recommended procedure for carrying out the connection.

2.4.4.6 Securing of Trailing Cable

Provision shall be made for securing the trailing cable to a framework to absorb stress on the electrical terminals by catenary tension of the cable.

2.4.5 Harmonics

The total harmonic distortion (THD) in the voltage waveform in the distribution systems shall not to exceed 8% and any single order harmonics not to exceed 5%. Other higher values may be accepted provided the distribution equipment and consumers are designed to operate at the higher limits. Where higher values of harmonic distortion are expected, any other possible effects, such as additional heat losses in machines, network resonances, errors in control and monitoring systems shall be considered.

2.5 Circuit Protection System

2.5.1 System Design

2.5.1.1 General

2.5.1.2 Electrical installations shall be protected against accidental overload and short circuit, except as permitted by as given below Sect [2.6.1]

Where it is impracticable to do so, such as engine starting battery circuit, and Where by design, the installation is incapable of developing overload, in which case it may be protected against short circuit only.

The protection shall be by automatic protective devices for:

i) Continued supply to remaining essential circuits in the event of a fault, and

ii) Minimizing the possibility of damage to the system and fire.

Three-phase, three-wire alternating current circuits shall be protected by a triple-pole circuit breaker with three overload trips or by a triple-pole switch with a fuse in each phase. All branch circuits shall be protected at distribution boards only, and any reduction in conductor sizes shall be protected. Dual-voltage systems having an earthed neutral are not to have fuses in the neutral conductor, but a circuit breaker which simultaneously opens all conductors may be installed, when desired. In no case is the dual-voltage system to extend beyond the last distribution board.

2.5.1.3 Protection Against Short-circuit

2.5.1.3(a) Protective Devices. Protection against short-circuit shall be provided for each non-earthed conductor by means of circuit breakers or fuses.

2.5.1.3(b) Rated Short-circuit Breaking Capacity. The rated short-circuit breaking capacity of every protective device shall not to be less than the maximum available fault current at that point. For alternating current (AC), the rated short-circuit breaking capacity shall not to be less than the root mean square (rms) value of the AC component of the prospective short-circuit current at the point of application. The circuit breaker shall be able to break any current having an AC component not exceeding its rated breaking capacity, whatever the inherent direct current (DC) component may be at the beginning of the interruption.

2.5.1.3(c) Rated Short-circuit Making Capacity. The rated short-circuit making capacity of every switching device shall be adequate for maximum peak value of the prospective short-circuit current at the point of installation. The circuit breaker shall be able to make the current corresponding to its making capacity without opening within a time corresponding to the maximum time delay required.

2.5.1.4 Protection Against Overload

2.5.1.4(a) Circuit Breakers. Circuit breakers or other mechanical switching devices for overload protection are to have a tripping characteristic (overload-trip time) adequate for the overload capacity of all elements in the system to be protected and for any discrimination requirements.

2.5.1.4(b) Fuses. A fuse of greater than 320 amperes shall not to be used for overload protection.

2.5.1.4(c) Rating . Fuse ratings and rating (or settings, if adjustable) of time-delay trip elements of circuit breakers are not to exceed the rated current capacity of the conductor to be protected as listed in Chapter 6-Sect 4/Table 6.4.10, except as otherwise permitted for generator motor, and transformer circuit protection in Chapter 6 Sect2[2.5.2] , Ch 6 Sect2[2.5.7] and Chapter 6 Sect2[2.5.8]. If the standard ratings or settings of overload devices do not correspond to the rating or the setting allowed for conductors, the next higher standard rating or setting may be used, provided that it does not exceed 150% of the allowable current carrying capacity of the conductor, where permitted by the Standard to which the feeder cables have been constructed. Except as otherwise permitted for motor and transformer branch- circuit protection, adjustable-trip circuit breakers of the time-delay or instantaneous type shall be set to operate at not more than 150% of the rated capacity of the conductor to be protected.

2.5.1.4(d) Indication. The rating or setting of the overload protective device for each circuit is to be permanently indicated at the location of the protective device.

2.5.1.5 Back-up Protection

2.5.1.5(a) Back-up Fuse Arrangements. Circuit breakers having breaking and/or making capacities less than the prospective short-circuit current at the point of application will be permitted, provided that such circuit breakers are backed-up by fuses which have sufficient short-circuit capacity for that application. The fuse shall be specifically designed for back-up combinations with the circuit breaker, and the maximum fault rating for the combination shall be provided.

2.5.1.5(b) Cascade Protection. Cascade protection may be permitted, subject to special consideration. Such special consideration shall not intended for new construction vessels, however may be granted when modifications are performed to existing vessels. The cascade protection shall be arranged such that the combination of circuit protective devices has sufficient short-circuit breaking capacity at the point of application [Refer Chapter 6 Sect 2/[2.5.1.3(b)]. All circuit protective devices are to comply with the requirements for making capacity [Refer.Chapter 6 Sect 2/[2.5.1.3(c)]. Cascade protection shall not to be used for circuits of primary essential services. Where cascade protection is used for circuits of secondary essential services, such services shall be duplicated, provided with means of automatic transfer and the automatic transfer is to alarm at a manned location. Cascade protection may be used for circuits of non-essential services.

2.5.1.6 Coordinated Tripping

Coordinated tripping shall be provided between generator, bus tie, bus feeder and feeder protective devices. Refer also Chapter 6 Sect 2 [2.5.2.2] and Chapter 6 Sect 2 [2.5.4.1]. Except for cascade system (backup protection) in Chapter 6 Sect 2 [2.5.1.5], the coordinated tripping is also to be provided between feeder and branch-circuit protective devices for essential services. Continuity of service to essential circuits under short-circuit conditions shall be achieved by discrimination of the protective devices, as follows:

2.5.1.6(a) The tripping characteristics of protective devices in series shall be coordinated.

2.5.1.6(b) Only the protective device nearest to the fault is to open the circuit, except for the cascade system (back-up protection), as specified in Chapter 6 Sect 2 [2.5.1.5(a)].

2.5.1.6(c) The protective devices shall be capable of carrying, without opening, a current not less than the short-circuit current at the point of application for a time corresponding to the opening of the breaker, increased by the time delay required for discrimination.

2.5.2 Protection for Generators

2.5.2.1 General

Generators of less than 25 kW not arranged for parallel operation may be protected by fuses. Any generators arranged for parallel operation and all generators of 25 kW and over shall be protected by a trip-free circuit breaker whose trip settings are not to exceed the thermal withstand capacity of the generator. The long-time over-current protection shall not to exceed 15% above either the full- load rating of continuous rated machines or the overload rating of special-rated machines. The shutting down of the prime mover is to cause the tripping of the ship service generator circuit breaker.

2.5.2.2 Trip Setting for Coordination

The instantaneous and short-time overcurrent trips of the generators shall be set at the lowest values of current and time which will coordinate with the trip settings of feeder circuit breakers. Refer also Chapter 6-Sect 2/[2.5.1.6], Chapter 6-Sect 2[2.5.2], and Chapter 6-Sect 2/[2.5.3.2].

2.5.2.3 Load-shedding Arrangements

2.5.2.3(a) Provision for Load Shedding Arrangements. In order to safeguard continuity of the electrical power supply, automatic load-shedding arrangements or other equivalent arrangements shall be provided:

i) Where only one generating set is normally used to supply power for propulsion and steering of the vessel, and a possibility exists that due to the switching on of additional loads, whether manually or automatically initiated, the total load exceeds the rated generator capacity of the running generator, or

ii) Where electrical power is normally supplied by more than one generator set simultaneously in parallel operation for propulsion and steering of the vessel, upon the failure of one of the parallel running generators, the total connected load exceeds the total capacity of the remaining generator(s).

2.5.2.3(b) Services not Allowed for Shedding. Automatic load-shedding arrangements or other equivalent arrangements are not to automatically disconnect the following services. Refer Chapter 6 Sect 1[1.2.4] for the definition of essential services.

i) Primary essential services that, when disconnected, will cause immediate disruption to propulsion and maneuvering of the vessel,

ii) Emergency services as listed in Chapter 6 Sect 2 [2.3.2], and

iii) Secondary essential services that, when disconnected, will:

- cause immediate disruption of systems required for safety and navigation of the vessel, such as:

  Lighting systems,

  Navigation lights, aids and signals,

  Internal communication systems required by Chapter 6 Sect 2 [2.8] etc.

- prevent services necessary for safety from being immediately reconnected when the power supply is restored to its normal operating conditions, such as:

  Fire pumps, and other fire extinguishing medium pumps, Bilge pumps,

  Ventilation fans for engine and boiler rooms

2.5.2.4 Emergency Generator

The emergency generator is also to comply with Chapter 6 Sect 2 [2.5.1], Chapter 6 Sect 2 [2.5.3] ,Chapter 6 Sect 2 [2.5.4] Chapter 6 Sect 2 [2.3.5]

2.5.3 Protection for Alternating-current (AC) Generators

2.5.3.1 Short-time Delay Trip

Short-time delay trips shall be provided with circuit breakers for AC generators. Refer also Chapter 6 Sect 2 [2.5.2.2].The current setting of the short time delay trip shall be less than the steady state short-circuit current of the generator.

For generators with a capacity of less than 200 kW having prime movers such as diesel engines or gas turbines which operate independently of the electrical system, consideration may be given to omission of short-time delay trips if instantaneous trips and long time overcurrent protection Refer Chapter 6 Sect 2 [2.5.2.1] are provided. When the short time delay trips are omitted, the thermal withstand capacity of the generator shall be greater than the steady state short-circuit current of the generator, until activation of the tripping system.

2.5.3.2 Parallel Operation

Where AC generators are arranged for parallel operation with other AC generators, the following protective devices shall be provided.

2.5.3.2(a) Instantaneous Trip - Instantaneous trips shall be installed and set in excess of the maximum short-circuit contribution of the individual generator where three or more generators are arranged for parallel operation. Alternative suitable protection, such as generator differential protection, which will trip the generator circuit breaker in the event of a fault in the generator or in the supply cable between the generator and its circuit breaker, would also be acceptable. Refer also Chapter 6 Sect 2 [2.5.2.2]

2.5.3.2(b) Reverse Power Protection-A time-delayed reverse active power protection or other devices which provide adequate protection shall be provided. The setting of protective devices shall be in the range of 2% to 6% of the rated power for turbines and in the range of 8% to 15% of the rated power for diesel engines. A setting of less than 8% of the rated power of diesel engines may be allowed with a suitable time delay recommended by the diesel engine manufacturer**.** A fall of 50% in the applied voltage shall not to render the reverse power protection inoperative, although it may alter the setting to open the breaker within the above range.

2.5.3.2(c) Under voltage Protection. Means shall be provided to prevent the generator circuit breaker from closing if the generator shall not generating and to open the same when the generator voltage collapses.

In the case of an under voltage release provided for this purpose, the operation shall be instantaneous when preventing closure of the breaker, but shall be delayed for discrimination purposes when tripping a breaker.

2.5.4 Protection for Direct Current (DC) Generators

2.5.4.1 Instantaneous Trip

DC generator circuit breakers shall be provided with an instantaneous trip set below the generator maximum short-circuit current and are to coordinate with the trip settings of feeder circuit breakers supplied by the generator.

2.5.4.2 Parallel Operation

2.5.4.2(a) Reverse Current Protection. DC generators arranged for parallel operation with other DC generators or with an accumulator battery shall be provided with instantaneous or short-time delayed reverse current protection. The setting of the

protection devices shall be within the power range specified by Chapter 6 Sect 2 [2.5.3.2 (a)]. When an equalizer connection is provided, the reverse current device shall be connected on the pole opposite to the equalizer connection where the series compound winding for the generator is connected. Reverse current protection shall be adequate to deal effectively with reverse current conditions emanating from the distribution system (e.g., electric driven cargo winches).

2.5.4.2(b) Generator Ammeter Shunts. Generator ammeter shunts shall be so located that the ammeters indicate total generator current.

2.5.4.2(c) Under voltage Protection. Requirements for AC generator in Chapter 6 Sect 2 [2.5.3.2(c)] are also applicable to DC generator.

2.5.5 Protection for Accumulator Batteries

Accumulator (storage) batteries, other than engine starting batteries, shall be protected against overload and short circuits by devices placed as near as practicable to the batteries, but outside of the battery rooms, lockers or boxes, except that the emergency batteries supplying essential services are to have short circuit protection only. Fuses may be used for the protection of emergency lighting storage batteries instead of circuit breakers up to and including 320 amperes rating. The charging equipment, except converters, for all batteries with a voltage of more than 20% of the line voltage shall be provided with reverse current protection.

2.5.6 Protection for External or Shore Power Supply

2.5.6.1 General

Where arrangements are made for the supply of electricity from a source on shore or other external source, permanently fixed cables from the external supply or shore connection box to the main or emergency switchboard shall be protected by fuses or circuit breakers located at the connection box.

2.5.6.2 Interlocking Arrangement

Where the generator shall not arranged for parallel operation with the external or shore power supply, an interlocking arrangement shall be provided for the circuit breakers or disconnecting devices between the generator and the external or shore power supply in order to safeguard from connecting unlike power sources to the same bus.

2.5.7 Protection for Motor Branch Circuits

2.5.7.1 General

Trip elements of circuit breaker for starting and for short-circuit protection shall be in accordance with Sect [2.5.7.2] or Sect [2.5.7.3] , except that circuit breakers having only instantaneous trips may be provided as part of the motor control center. Where circuit breakers having only instantaneous trips are provided, the motor running protective device is to open all conductors, and the motor controller shall be capable of opening the circuit without damage to itself resulting from a current up to the setting of the circuit breaker. Circuit-disconnecting devices shall be provided for each motor branch circuit and to be in accordance with Chapter 6 Sect 3[3.2.7] and Sect 4[4.4.9.2]

2.5.7.2 Direct-current Motor Branch Circuits

The maximum fuse rating or the setting of the time-delay trip element shall be 150% of the full- load rating of the motor served. If that rating or setting shall not available, the next higher available rating or setting may be used.

2.5.7.3 Alternating-current Motor Branch Circuits

The maximum fuse rating or setting of the trip element shall be the value stated below. If that rating or setting shall not available, the next higher available rating or setting may be used.

Type of Motor	*Rating or Setting in % Motor Full-load Current*
Squirrel-cage and Synchronous Full-voltage, Reactor or Resistor-starting	250
Autotransformer Starting	200
Wound Rotor	150

When fuses are used to protect poly phase motor circuits, it shall be arranged to protect against single-phasing.

The setting of magnetic instantaneous trips for short-circuit protection only is to exceed the transient current inrush of the motor, and to be the standard value nearest to, but not less than, 10 times full- load motor current.

2.5.7.4 Motor Running Protection

Running protection shall be provided for all motors having a power rating exceeding 0.5 kW, except that such protection shall not to be provided for steering gear motors (Refer Chapter 6 Sect 2 2/[2.6.2]. The running protection shall be set between 100% and 125% of the motor rated current.

For athwartship thrusters having only instantaneous trips, a motor overload alarm in the wheelhouse is acceptable in lieu of the motor running protection.

2.5.7.5 Under voltage Protection and Under voltage Release

Under voltage protection shall be provided for motors having power rating exceeding 0.5 kW (0.7 hp) to prevent undesired restarting upon restoration of the normal voltage, after a stoppage due to a low voltage condition or voltage failure condition.

Under voltage release shall be provided for the following motors unless the automatic restart upon restoration of the normal voltage will cause hazardous conditions:

i) Primary essential services .Refer Chapter 6 Sect 1Table 6-1.4

ii) Only those secondary essential services necessary for safety, such as: Chapter 6 Sect 1 Table 6.1.5

- Fire pumps and other fire extinguishing medium pumps.
- Ventilating fans for engine and boiler rooms where they may prevent the normal operation of the propulsion machinery (Refer Note 1 below)

Special attention shall be paid to the starting currents due to a group of motors with under voltage release controllers being restarted automatically upon restoration of the normal voltage. Means such as sequential starting shall be provided to limit excessive starting current, where necessary.

Note 1: Under voltage protection shall be provided for ventilation fans for engine and boiler room, which are supplied by an emergency source of power for the purpose of removing smoke from the space after a fire has been extinguished.

2.5.8 Protection for Transformer Circuits

2.5.8.1 Setting of Overcurrent Device

Each power and lighting transformer feeder shall be protected by an overcurrent device rated or set at a value not more than 125% of rated primary current. When a transformer is provided with an overcurrent device in the secondary circuit rated or set at not more than 125% of rated secondary current, the feeder overcurrent device may be rated or set at a value less than 250% of the rated primary current.

2.5.8.2 Parallel Operation

When the transformers are arranged for parallel operation, means shall be provided to disconnect the transformer from the secondary circuit. Where power can be fed into secondary windings, short-circuit protection (i.e., short-time delay trips) shall be provided in the secondary connections. In addition, when the disconnecting device in primary side of the transformer is opened due to any reason (e.g., the short-circuit protection, overload protection, or manual operation for opening), the disconnecting device in the secondary side of the transformer shall be arranged to open the circuit automatically.

2.5.9 Protection for measuring instruments , Pilot Lamps and Control Circuits

Measuring circuits and devices (voltage transformers, voltmeters, voltage coils of measuring instruments, insulation monitoring devices etc.) and pilot lamps are to be Protected against short-circuit by means of multi pole circuit-breakers or fuses. The protective devices are to be placed as near as possible to the tapping from the supply. The secondary side of current transformers is not to be protected.

Control circuits and control transformers are to be protected against overload and short-circuit by means of multi pole circuit-breakers or fuses on each pole not connected to earth. Overload protection may be omitted for transformers with a rated current of less than 2 A on the secondary side. The short-circuit protection on the secondary side may be omitted if the transformer is designed to sustain permanent short-circuit current.

Where a fault in a pilot lamp would impair the operation of essential services; such lamps are to be protected separately from other circuits such as control circuits.

Pilot lamps connected via short-circuit-proof transformers may be protected in common with control circuits.
Circuits whose failure could endanger operation, such as steering gear control feeder circuits, are to be protected only against short-circuit.
The protection is to be adequate for the minimum cross-section of the protected circuits.

2.5.10 Protection of Harmonic Filter Circuits

Harmonic filters circuits shall be protected against overload and short-circuit. An alarm shall be initiated in a continuously manned location in the event of an activation of overload or short-circuit protection.

In cases where multiple harmonic filter circuits are used in series or in parallel, current imbalance between the different filter circuits shall be continuously monitored. The total rms current into each phase of a passive harmonic filter circuit is also to be monitored. Detection of a current imbalance shall be alarmed in a continuously manned location. If the current

imbalance exceeds the ratings of the individual filter circuit components, the appropriate circuits shall automatically trip and be prevented from interacting with other parts of the electrical network.

Harmonic filters that contain capacitors are to have means of monitoring and of providing advance warning of capacitor(s) deterioration. Harmonic filters containing oil filled capacitors shall be provided with suitable means of monitoring oil temperature or capacitor internal pressure. Refer to Chapter 5 Sect 2[2.5.3] for additional requirements. Detection of capacitor(s) deterioration shall be alarmed locally at the equipment and in a continuously manned location. Power to the harmonic filter circuit containing the deteriorated capacitor(s) shall be automatically disconnected and the capacitor discharged safely upon detection of deterioration.

In cases where provisions for automatic/manual switching and/or disconnection of harmonic filter circuits are provided, there shall be provisions to prevent transient voltages in the system and to automatically discharge the capacitors in the harmonic filter circuits before they can be put back on-line.

Capacitors used in harmonic filters/capacitor banks shall be prevented from producing a leading system power factor which could potentially lead to generator(s) becoming self-excited. In cases where a leading power factor condition approaches the point of the generator(s) becoming self-excited, the appropriate capacitive circuits shall be automatically disconnected and prevented from interacting with the rest of the electrical network.

2.6 System for Steering Gear

2.6.1 Power Supply Feed

Each electric or electro-hydraulic steering gear shall be served by at least two exclusive circuits fed directly from the main switchboard. However, one of the circuits may be supplied through the emergency switchboard.

For vessels fitted with alternative propulsion and steering arrangements, such as azimuthing propulsors, where the propulsion power exceeds 2,500 kW per thruster unit, Refer Part 6-Chapter 5-Sect 4/[4.1.2.2] of the *INTLREG Rules for Building and Classing Steel Vessels*.

An auxiliary electric or electro-hydraulic steering gear associated with a main electric or electro-hydraulic steering gear may be connected to one of the circuits supplying this main steering gear. The circuits supplying an electric or electro-hydraulic steering gear are to have adequate rating for supplying all motors, control system and instrumentation which are normally connected to them and operated simultaneously. The circuits shall be separated throughout their length as widely as is practicable.

2.6.2 Protection for Steering Gear Circuit

2.6.2.1 Short Circuit Protection

Each steering gear feeder shall be provided with short-circuit protection which shall be located at the main or emergency switchboard. Long term overcurrent protection shall not to be provided for steering gear motors.

2.6.2.1(a) Direct Current (DC) Motors. For DC motors, the feeder circuit breaker shall be set to trip instantaneously at not less than 300% and not more than 375% of the rated full-load current of the steering-gear motor, except that the feeder circuit breaker on the emergency switchboard may be set to trip at not less than 200%.

2.6.2.1(b) Alternating Current (AC) Motors. For AC motors, the protection against excess current, including starting current, if provided, shall be for not less than twice the full load current of the motor or circuit so protected, and shall be arranged to permit the passage of the appropriate starting currents.

2.6.2.1(c) Fuses as Motor-feeder Protection. The use of fuses instead of circuit breakers for steering gear motor feeder short-circuit protection shall not permitted.

2.6.2.1(d) Control System Power Supply Circuit. The power supply circuit for steering gear control system shall be provided with short circuit protection only. Refer also. Chapter 3 Sect 3[3.6.3]

2.6.2.2 Under voltage Release

Power unit motor controllers and other automatic motor controllers shall be fitted with under voltage release.

2.6.3 Emergency Power Supply

Where the rudder stock is over 230 mm (9 in.) diameter using K_S = 1.0 in way of the tiller, excluding strengthening for navigation in ice, an alternative power supply, sufficient at least to supply the steering gear power unit and also its associated control system and rudder angle indicator, shall be provided automatically within 45 seconds either from the emergency source of electrical power or from an independent source of power located in the steering gear compartment. The steering gear power unit under alternative power supply shall be capable of moving the rudder from 15 degrees on one side to 15 degrees on the other side in not more than 60 seconds with the vessel at the summer draft while running at one half the maximum speed ahead or 7 knots, whichever is the greater. The alternative power supply is to have a capacity for at least 10 minutes of continuous operation. Refer Chapter 6 Sect 2[2.3.2.5]

Where an engine driven pump or a generator is the alternative power source, the starting arrangements should be in compliance with the requirements related to the starting arrangements of emergency generators.

2.6.4 Controls, Instrumentation, and Alarms

Refer Chapter 3 Sect 3[3.6]

2.7 Lighting and Navigation Light Systems

2.7.1 Lighting System

2.7.1.1 Main Lighting System

A main electric lighting system is to provide illumination throughout those parts of the vessel normally accessible to and used by passengers or crew. It shall be supplied from the main source of electrical power.

2.7.1.2 System Arrangement

2.7.1.2(a) Main Lighting System. The arrangement of the main electric lighting system shall be such that a fire or other casualty in spaces containing the main source of electrical power, associated transforming equipment, if any, the main switchboard and the main lighting switchboard will not render the emergency electric lighting system required by Chapter 6 Sect 2 [2.3.2.2]of this Section

2.7.1.2(b) Emergency Lighting System. The arrangement of the emergency electric lighting system shall be such that a fire or other casualty in spaces containing the emergency source of electrical power, associated transforming equipment, if any, the emergency switchboard and the emergency lighting switchboard will not render the main electric lighting system required by Chapter 6 Sect 2 [2.7.1.1] inoperative.

Lighting Circuits

2.7.1.2(a) Machinery Space and Accommodation Spaces. In spaces such as:

- Public spaces;
- Category A machinery spaces;
- Galleys;
- Corridors;
- Stairways leading to boat-decks, including stair towers and escape trunks;

  there shall be more than one final sub-circuit for lighting, one of which may be supplied from the emergency switchboard in such a way that failure of any one circuit does not leave these spaces in darkness.

2.7.1.3(b) Cargo Spaces. Fixed lighting circuits in cargo spaces shall be controlled by multipole- linked switches situated outside of the cargo spaces. Means shall be provided on the multipole linked switches to indicate the live status of circuits.

2.7.1.3 Protection for Lighting Circuits

Lighting circuits shall be protected against overload and short-circuit. Overload protective devices shall be rated or set at not more than 30 amperes. The connected load shall not to exceed the lesser of the rated current carrying capacity of the conductor or 80% of the overload protective device rating or setting. The control switches shall be rated for the load controlled.

2.7.2 Navigation Light System

2.7.2.1 Feeders

The masthead, side and stern lights shall be separately connected to a distribution board reserved for navigation lights, placed in an accessible position on the bridge, and connected directly or through transformers to the main or emergency switchboard. These lights shall be fitted with duplicate lamps or other dual light sources and shall be controlled by an indicator panel. Provision shall be made on the bridge for the navigation lights to be transferred to an alternative supply. Refer Chapter 6 Sect 2 [2.3.2.2(c)] for power supply.

2.7.2.2 Navigation Light Indicator

Each navigation light, as listed in Sect 2 [2.7.2.1] above, shall be provided with an indicator panel which gives audible and/or visual warning automatically in the event of extinction of the light. If an audible device is used, it shall be connected to a separate source of supply, for example, a primary or accumulator (storage) battery. If a visual signal is used which is connected in series with the navigation light, means shall be provided to prevent the extinction of the navigation light due to failure of the visual signal. A means for disconnection of each navigation light circuit shall be provided at the indicator panel.

In order to satisfy Sect2 [2.7.2.2] above of this section, an audible and visual alarm is to be activated to notify the Officer of the Watch when the luminous intensity of the light reduces below the level required by the IMO Convention on the International

Regulations for Preventing Collisions at Sea. Alternative measures to ensure continuing acceptable performance of navigation lights using light emitting diodes may be considered that are in accordance with:

a. IMO Res. MSC.253 (83), Performance Standards for Navigation Lights, Navigation Light Controllers and associated Equipment, and

2.7.2.3 EN 14744, Inland navigation vessels and sea-going vessels – Navigation light, or a relevant National or International Standard. Where alternative measures are proposed that require verification by personnel of the luminous intensity of navigation lights using light emitting diodes, details of the inspection implementation in the ship's safety management system and acceptance by the National Administration are to be submitted for consideration.

2.7.2.4 Protection

Each navigation light, as listed in Chapter 6 Sect 2 [2.7.2.1], shall be protected by a fuse or circuit breaker in each insulated pole. Similarly, the navigation light indicator panel shall be provided with a fused- feeder disconnect double-pole switch or double-pole circuit breaker which may be fitted on the distribution board or the indicator panel. The rating of the fuses or circuit breaker setting shall be at least twice that of the largest branch fuse or the circuit breaker setting and greater than the maximum panel load.

2.8 Interior Communication Systems

2.8.1 Navigation Bridge

2.8.1.1 General

At least two independent means shall be provided for communicating orders from the navigation bridge to the position in the machinery space or in the control room from which the speed and direction of thrust of the propellers are normally controlled. Appropriate means of communication shall be provided to any other positions from which the main propulsion machinery may be controlled. Refer Chapter 6 Sect 2[2.3.2.2]b) for power supply.

2.8.1.2 Engine Order Telegraph

One of the communicating means between the navigation bridge and the main propulsion control position shall be an engine room telegraph which provides visual indication of the orders and responses both in the machinery space and on the navigation bridge. Final sub-circuit for power supply to this system shall be independent of other electrical systems and control, monitoring and alarm systems. Refer Part 6-7-3/[3.2.2] or power supply. Communication network and power supply circuit for this may be combined with the engine order telegraph system specified in Sect 2[2.8.2] below. For vessels less than 500 GT, an engine order telegraph need not be provided if the propulsion plant is controlled entirely from the navigation bridge with no means of normal engine control from the engine room.

2.8.2 Main Propulsion Control Stations

A common talking means of voice communication and calling or engine order telegraph repeater shall be provided between the main propulsion control station and local control positions for main propulsion engines and controllable pitch propellers. Voice communication systems are to provide the capability of carrying on a conversation while the vessel is being navigated. Final sub-circuit for power supply to these shall be independent of other electrical

systems and the control, monitoring and alarm systems. Communication network and power supply circuit for the voice communication system may be combined with the system required in Sect[2.8.3] below

2.8.3 Voice Communications

2.8.3.1 Propulsion and Steering Control Stations

A common talking means of voice communication and calling shall be provided between the navigation bridge, main propulsion control station and the steering gear compartment so that the simultaneous talking among these spaces is possible at all times and the calling to these spaces is always possible even if the line is busy.

2.8.3.2 **Elevator**

Where an elevator is installed, a telephone shall be permanently installed in all cars and connected to a continuously manned area. The telephone may be sound powered, battery operated or electrically powered from the emergency source of power.

2.8.3.3 Independence of Power Supply Circuit

Final sub-circuit for power supply to these voice communication systems shall be independent of other electrical systems and control, monitoring and alarm systems. Refer Chapter 6 Sect 2[2.3.2.2]b) for power supply.

2.8.4 Emergency and Interior-communication Switchboard

Emergency and interior-communication switchboards, when fitted, are to comply with the applicable parts of Chapter 6 Sect 4[4.4] and attention is directed to the requirements of the governmental authority whose flag the vessel flies.

2.8.5 Public Address System

Vessels with the keel laid or in similar stage of construction are to meet the following requirements. Where a public address system is provided to supplement the general emergency alarm required by Chapter 6 Sect 2[2.9.1.1], the public address system is to comply with subparagraphs Sect[2.8.5[through Sect 2.8.5.3] as follows:

The system is to have a loud speakers to broadcast messages to all spaces where crew members or passengers, or both, are normally present, and to muster stations. The system is to provide for the broadcast of messages from the navigation bridge and other places onboard, as may be required by INTLREG, with an override function so that all emergency messages may be broadcast if any loudspeaker in the spaces concerned has been turned off, its volume has been turned down or the public address system is ~~in~~ used for other purposes.

The system shall be installed with acoustic marginal conditions and shall not to require any action from the addressee The system shall be protected against unauthorized use.

2.8.5.1

With the vessel underway in normal conditions, the minimum sound pressure levels for broadcasting emergency announcements in interior spaces shall be 75 dB (A) and at least 20 dB (A) above the corresponding speech interference level.

2.8.5.2

The system shall be connected to the emergency source of power. For passenger vessels, Refer Part 6- Chapter 7 Sect 3[3.1.1] of the *INTLREG Rules for Building and Classing Steel Vessels*.

2.8.5.3

Where a single system serves for both public address and general emergency alarm functions, the system shall be arranged so that a single failure shall not to cause the loss of both systems and is to minimize the effect of a single failure. The major system components, such as power supply unit, amplifier, alarm tone generator, etc., shall be duplicated. Power supply is to comply with Chapter 6 Sect 2[2.9.1.2] b) and Ch 6 Sect 2[2.9.1.2] c)

For cargo vessels, the coverage provided by the arrangement of the system loops and speakers shall be such that after a single failure, the announcements and alarms are still audible in all spaces. Duplication of system loops and speakers in each room or space shall not required provided the announcements and alarms are still audible in all spaces.

For passenger vessels, a single system serving for both public address and general emergency alarm functions would still be required to have at least two loops sufficiently separated throughout their length with two separate and independent amplifiers. Refer Part 6 / Chapter 2/sect 4/ [4.2.17 & 4.2.18] of the *INTLREG Rules for Building and Classing Steel Vessels*.

Where the public address system is used for sounding the general emergency alarm and the fire-alarm, the following requirements are to be met in addition to those specified in (b) of below:

a. The emergency system is the sound signals for the emergency alarms.

b. More than one device is provided for generating the sound signals for the emergency alarms. Where more than one alarm is to be sounded through the public address system they are to have recognizably different characteristics and additionally be arranged so that any single electrical failure which prevents the sounding of any one alarm will not affect the sounding of the remaining alarms

2.9 Manually Operated Alarms

2.9.1 General Emergency Alarm System

2.9.1.1 General

Each vessel over 100 GT shall be fitted with a general emergency alarm system, complying with the requirements of Sect [2.9.1.2] below, to summon crew to muster stations and initiate the actions included in the muster list. The system shall be supplemented by either a public address system, in accordance with 2.8.5 above, or other suitable means of communication. Any entertainment sound system shall be automatically turned off when the general emergency alarm is activated. For passenger vessels, Refer also Part 7B / Chapter 2/sect 2 of the *INTLREG Rules for Building and Classing Steel Vessels*.

2.9.1.2 System Requirements

2.9.1.2(a) The general emergency alarm system shall be capable of sounding the general emergency alarm signal consisting of seven or more short blasts followed by one long blast on the ship's whistle or siren and additionally on an electrically operated bell or klaxon or other equivalent warning system, which shall be powered from the vessel's main supply and the emergency source of electrical power required by Chapter 6 Sect 2[2.3]

2.9.1.2(b) There shall be not less than two sources of power supply for the electrical equipment used in the operation of the General Emergency Alarm System, one of which shall be from the emergency switchboard and the other from the main switchboard. The supply shall be provided by separate feeders reserved solely for that purpose. Such feeders

are to run to an automatic change- over switch situated in, or adjacent to, the main general emergency alarm control panel.

2.9.1.2 c) An alarm shall be provided to indicate when there is a loss of power in any one of the feeders required by Chapter 6 Sect 2[2.9.1.2] b)

2.9.1.2(d) As an alternative to two feeders as described in Chapter 6 Sect 2[2.9.1.2] b) a battery may be considered as one of the required sources, provided the battery has the capacity of at least 30 minutes of continuous operation for alarming and 18 hours in standby. A low voltage alarm for the battery and the battery charger output shall be provided. The battery charger shall be supplied from the emergency switchboard.

2.9.1.2I The system shall be capable of operation from the navigation bridge and, except for ship's whistle, also from other strategic points. The system shall be audible throughout all of the accommodation and normal crew working spaces. The alarm is to continue to function after it has been triggered until it is manually turned off or is temporarily interrupted by a message on the public address system.

2.9.1.2(f) - The minimum sound pressure levels for the emergency alarm tone in interior spaces shall be 80 dB and at least 10 dB (A) above ambient noise levels existing during normal equipment operation with the vessel underway in moderate weather.

2.9.1.2(g) The sound pressure levels at the sleeping position in cabins and in cabin bathrooms shall be at least 75 dB (A) and at least 10 dB (A) above ambient noise levels. (Refer to Code on Alarms and Indicators adopted by IMO Resolution A.830 (19).)

2.9.2 Engineers Alarm

On vessels of 500 gross tons and over, intended for international voyages, an engineers' alarm operable from the centralized propulsion machinery control station in the engine room or at the propulsion machinery local control position, as appropriate, shall be provided. It shall be audible in each engineer's cabin, and its sound pressure level is to comply Chapter 6 Sect 2[2.9.1.2].Chapter 6 Sect 2[2.3.2.2] e) for power supply.

2.9.3 Refrigerated Space Alarm

Fan and diffuser rooms serving subfreezing compartments shall be provided with a device capable of activating an audible and visual alarm in a manned control center and operable from within the latter space for the protection of personnel. Refer Part 6-7-2/[2.1.9]-for power supply.

2.9.4 Elevator

A device which will activate an audible and visual alarm in a manned control center shall be provided in all cars. Such alarm system shall be independent of power and control systems of the elevator. For power supply. Refer also Chapter 6 Sect 2[2.3.2.2] e)

2.10 Fire Protection and Fire Detection Systems

2.10.1 Emergency Stop

2.10.1.1 Ventilation System

2.10.1.1(a) General. All electrical ventilation systems shall be provided with means for stopping the motors in case of fire or other emergency. These requirements do not apply to closed re-circulating sy,stems within a single space. Refer Chapter 6 Sect 6[6.1.7] Ch 6 Sect 6[6.3.2.6]Chapter 5 Sect 1[1.3.1]

2.10.1.1(b) Propulsion Machinery Space Ventilation. Machinery-space ventilation shall be provided with means for stopping the ventilation fans. The means for stopping the power ventilation serving machinery spaces shall be entirely separate from the means for stopping the ventilation of spaces in Sect [2.10.1.1](c) , [2.10.1.1](d).below .

In the case of vessels for which SOLAS is applicable, the means of stopping the ventilation fans shall be grouped so as to be operable from two positions, one of which shall be located outside the space.

2.10.1.1 (c) Machinery Spaces other than Propulsion Machinery Spaces. Power ventilation systems serving these spaces shall be fitted with means for stopping the ventilation fan motors in the event of fire. The means for stopping the power ventilation serving these spaces shall be entirely separate from the means for stopping the ventilation of spaces in [2.10.1.1](b) and [2.10.1.1](d) below Refer also Chapter 5 Sect 1[1.3.1]

2.10..1.1(d) Accommodation Spaces, Service Spaces, Control Stations and Other Spaces. A control station for all other power ventilation systems shall be located in a centralized fire-fighting location or navigation bridge, or in an accessible position leading to, but outside of, the space ventilated.

2.10.1.2 Other Auxiliaries

Refer Part 6-7-5/[5.3] for emergency tripping and emergency stop for other auxiliaries, such as forced and induced draft fans, fuel oil units, lubricating oil service pumps, thermal oil circulating pumps and oil separators (purifiers).

2.10.2 Fire Detection and Alarm System

Refer Chapter 5 Sect 2[2.12] Chapter 5 Sect 2[2.15] Chapter 5 Sect 2[2.16.1] and Chapter 7 Sect 4[4.15.3]

SECTION 3 SHIPBOARD INSTALLATION

Contents

3.1 Plans and Data to be Submitted

3.1.1 Booklet of Standard Details

A booklet of the standard wiring practices and details, including such items as cable supports, earthing details, bulkhead and deck penetrations, cable joints and sealing, cable splicing, watertight and explosion- proof connections to equipment, earthing and bonding connections, etc., as applicable, shall be submitted. Where cable penetration methods for A- or B-class decks or bulkheads are shown, evidence of approval by an Administration signatory to 1974 SOLAS as amended is also to be submitted.

For high voltage systems Refer installation requirements given in Chapter 6[Sect 5[5.1.5.3]

For high voltage cables the minimum cable bending radii and securing arrangements, taking the relevant recommendations of the cable manufacturer into consideration, shall be included. Cable tray segregation (HV to HV and HV to LV arrangements) are also to be included.

3.1.2 Arrangement of Electrical Equipment

A general arrangement plan showing the location of at least the following electrical equipment shall be submitted for review.

- Generator, Essential Motor and Transformer
- Battery
- Switchboard, Battery Charger and Motor Controller
- Emergency Lighting Fixture
- General Emergency Alarm Device and Alarm Actuator
- Detector, Manual Call Point and Alarm Panel for Fire Detection and Alarm System
- Certified-safe Type Equipment

  Where cable splices or cable junction boxes are provided, locations of the splices and cable junction boxes together with the information of their services are also to be submitted for review.

3.1.3 Electrical Equipment in Hazardous Areas

A plan showing hazardous areas shall be submitted for review together with the following:

- A list/booklet of intended electrical equipment in the indicated hazardous areas, including a description of the equipment, applicable degree of protection and ratings. Refer Chapter 6 Sect 3[3.6.2]
- For intrinsically-safe systems, also wiring plans, installation instructions with any restrictions imposed by the certification agency.
- Detail of installation for echo sounder, speed log and impressed current cathodic protection system where located in these areas.

When the selection of the equipment has been finalized, a list/booklet identifying all equipment in the hazardous areas, their method of protection (flameproof, intrinsically safe, etc.), rating (flammable gas group and temperature class), manufacturer's name, model number and evidence of certification shall be submitted for review. A copy of this list/booklet shall be maintained onboard for future reference. Refer . Chapter 6 Sect 3[3.6.1.4]

3.1.4 Maintenance Schedule of Batteries

Maintenance Schedule of batteries for essential and emergency services. Refer Chapter 6 Sect 3[3.2.4.5]

3.2 Equipment Installation and Arrangement

3.2.1 General Consideration

3.2.1.1 Equipment Location

3.2.1.1(a) General. Electrical equipment shall be so placed or protected as to minimize the probability of mechanical injury or damage from the accumulation of dust, oil vapors, steam or dripping liquids. Equipment liable to generate arc shall be ventilated or placed in a compartment ventilated to avoid accumulation of flammable gases, acid fumes and oil vapors. Refer Ch 6 Sect 3,Table 6.3.1 for the required degree of protection for various locations.

3.2.1.1(b) Equipment in Areas Affected by Local Fixed Pressure Water-spraying or Local Water-mist Fire Extinguishing System in Machinery Spaces - Electrical and electronic equipment within areas affected by Local Fixed Pressure Water-spraying or Local Water-mist Fire Extinguishing Systems shall be suitable for use in the affected area. Refer Part 5B-6-3/Figure 6.3.1. Where enclosures have a degree of protection lower than IP44, evidence of suitability for use in these areas shall be submitted to INTLREG taking into account:

i) The actual Local Fixed Pressure Water-spraying or Local Water-mist Fire Extinguishing system being used and its installation arrangements, and

ii) The equipment design and layout (e.g., position of inlet ventilation openings, filters, baffles, etc.) to prevent or restrict the ingress of water mist/spray into the equipment. The cooling airflow for the equipment shall be maintained.

Note:

Additional precautions may be required to be taken with respect to:

a. Tracking as the result of water entering the equipment

b. Potential damage as the result of residual salts from sea water systems

c. High voltage installations

d. Personnel protection against electric shock

Equipment may require maintenance after being subjected to water mist/spray

FIGURE 6.3.1
Example of Area Affected by Local Fixed Pressure Water-spraying or Local Water-mist Fire Extinguishing System in Machinery Spaces *(2014)*

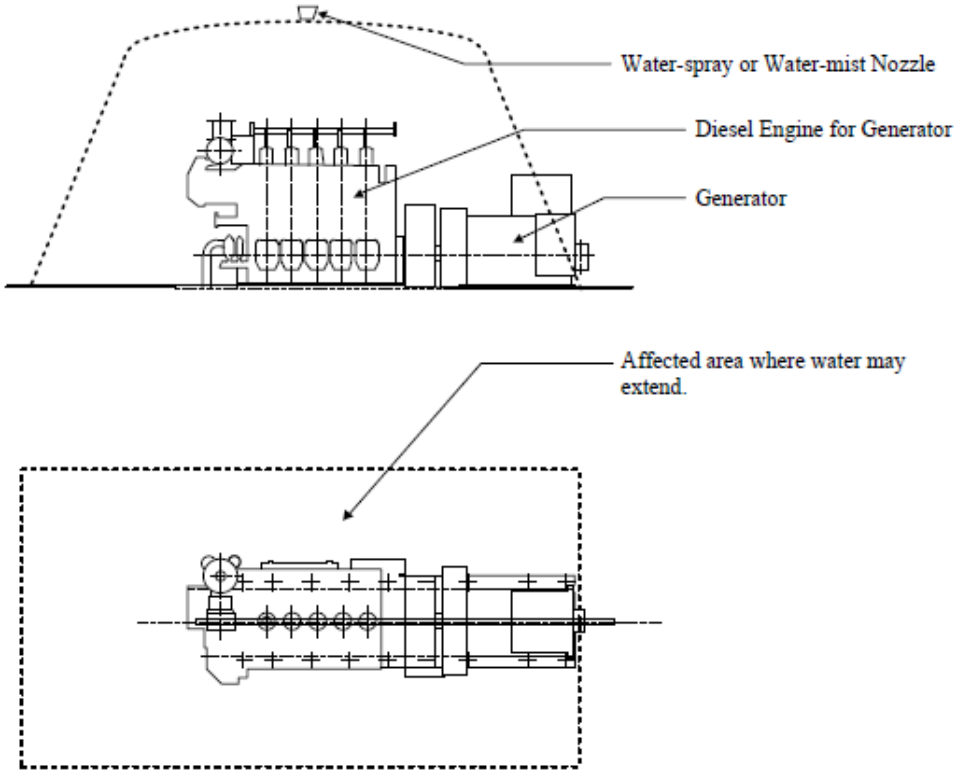

3.2.1.2 Protection from Bilge Water

All generators, motors and electric couplings shall be so arranged that they cannot be damaged by bilge water; and, if necessary, a watertight coaming shall be provided to form a well around the base of such equipment with provision for removing water from the well.

3.2.1.3 Accessibility

The design and arrangement of electrical apparatus is to provide accessibility to parts requiring inspection or adjustment. Armature and field coils, rotors and revolving fields shall be removable and where air ducts are used, there shall be means of access.

3.2.2 Generators

All generators shall be located with their shafts in a fore-and-aft direction on the vessel and are to operate satisfactorily in accordance with the inclination requirements of Chapter 1 Sect 1[1.9] Where it shall not practicable to mount the generators with the armature shafts in the fore-and-aft direction, their lubrication will require special consideration. Provision shall be made to prevent oil or oil vapor from passing into the machine windings.

3.2.3 Ship Service Motors

3.2.3.1 General

Motors for use in the machinery space above the floor plate or spaces where subject to mechanical injury or dripping of oil or water are to have an enclosure of at least IP22 protection, in accordance with Chapter 6-Sect 3/Table 6.3.1 However, where they are protected by drip covers, they may have an enclosure of a lower protection

grade than IP22. The motors having a protection enclosure of IP22 or lower shall be installed at a location high enough to avoid bilge water. Motors below the level of the floor plates are to have an enclosure of at least IP44 protection. Where motors intended for service at sea are not mounted with the rotor shafts in the fore-and-aft direction, the type of bearing and lubrication will require special consideration.

3.2.3.2 Pump Motors

Motors for operating plunger and close-coupled pumps are to have the driving end entirely enclosed or designed to prevent leakage from entering the motor.

3.2.3.3 Motors on Weather Decks

Motors for use on weather decks are to have an enclosure of at least IP56 protection or shall be enclosed in watertight housings.

3.2.3.4 Motors Below Decks

Motors below decks shall be installed at a location as dry as practicable and away from steam, water and oil piping.

3.2.4 Accumulator Batteries

3.2.4.1 General

The following requirements are applicable to permanently installed power, control and monitoring storage batteries of acid or alkaline types. Batteries shall be so arranged that the trays are accessible and provided with not less than 254 mm (10 in.) headroom. Where a relief valve is provided for discharging excessive gas due to overcharge, arrangements shall be made for releasing the gas to the weather deck away from any source of ignition.

3.2.4.2 Battery Installation and Arrangements

3.2.4.2(a) Large Batteries - Large storage batteries, those connected to a charging device with an output of more than 2 kW, shall be installed in a room assigned to the battery only, but may be installed in a deck locker if such a room shall not available. No electrical equipment shall be installed in the battery rooms unless essential for the operational purposes and certified safe for battery room atmosphere. Electrical equipment installed in battery rooms may be any of the types indicated in Chapter 6 Sect 3[3.6.1.] and shall be IEC Publication 60079-20-1 group IIC class T1.

3.2.4.2(b) Moderate-size Batteries. Batteries of moderate size, those connected to a charging device with a power output of 0.2 kW up to and including 2 kW, may be installed in the battery room or may be installed in battery lockers or deck boxes in the emergency generator room, machinery space or other suitable location. Cranking batteries shall be located as closely as possible to the engine or engines served.

3.2.4.2(c) Small Batteries. Small batteries shall be installed in a battery box and may be located as desired, except they are not to be located in sleeping quarters unless hermetically sealed.

3.2.4.2(d) Low-hydrogen-emission Battery Installations. A low-hydrogen-emission battery installation with a battery charger having a charging rate of a large or moderate battery size installation may be treated as a moderate or small battery installation, respectively, if the following are met:

i) Calculations under the worst case charging conditions are submitted that demonstrate that the low-hydrogen-emission battery installation does not emit more

hydrogen under similar charging conditions than a bank of standard lead acid batteries supplied by a 2 kW charger for a moderate battery installation or 0.2 kW charger for a small battery installation, and

ii) A warning notice is placed to notify maintenance personnel that additional batteries are not to be installed, and batteries are only to be replaced by other batteries of the same or lower hydrogen emission rate.

3.2.4.2(e) Battery Trays. Trays for batteries shall be chocked with wood strips or equivalent to prevent movement, and each tray shall be fitted with non-absorbent insulating supports on the bottom and with similar spacer blocks at the sides or with equivalent provision to secure air-circulation space all around each tray.

3.2.4.2(f) Identification of Battery Types. Lead-acid batteries and alkaline batteries, when placed in the same battery compartment, shall be effectively identified as to type and segregated.

3.2.4.3 Ventilation

3.2.4.3(a) Battery Rooms. Battery rooms shall be ventilated to avoid accumulation of flammable gas. Natural ventilation may be employed if ducts are run directly from the top of the battery room to the open air above.

If natural ventilation is impractical, mechanical exhaust ventilation shall be provided with fan intake at the top of the room. Fans shall be of non-sparking construction in accordance with Chapter 6 Sect 3[3.6.4.] and capable of completely changing the air in the battery room in not more than two minutes. Alternatively, a lesser ventilation rate may be considered, provided that satisfactory calculations are submitted substantiating that adequate ventilation is available to maintain the flammable gases within the battery room to a level below the lower explosive limit (L.E.L.) at the maximum battery charging current. Where the ventilation rate is based on low hydrogen emission type batteries, a warning notice to this effect shall be provided in a visible place in the battery room. Openings for air inlet shall be provided near the floor.

3.2.4.3(b) Battery Lockers. Battery lockers shall be ventilated, if practicable, similarly to battery rooms by a duct led from the top of the locker to the open air or to an exhaust ventilation duct. Louvers or equivalent shall be provided near the bottom for entrance of air.

3.2.4.3(c) Deck Boxes. Deck boxes shall be provided with a duct from the top of the box, terminating in a goose neck, mushroom head or equivalent to prevent entrance of water. Holes for air inlet shall be provided on at least two opposite sides of the box. The entire deck boxes, including openings for ventilation, shall be weather tight to prevent entrance of spray or rain.

3.2.4.3(d) Small Battery Boxes. Boxes for small batteries require no ventilation other than openings near the top to permit escape of gas.

3.2.4.4 Protection from Corrosion

The interiors of battery rooms, including the structural parts and shelves therein, as well as ventilation inlets and outlets shall be painted with corrosion-resistant paint. Shelves in battery rooms or lockers for acid batteries are to have a watertight lining of sheet lead not less than 1.6 mm ($^{1}/_{16}$ in.) on all sides. For alkaline batteries, the shelves shall be similarly lined with steel not less than 0.8 mm ($^{1}/_{32}$ in.) thick. Alternatively, a

battery room may be fitted with a watertight lead pan, steel for alkaline batteries, over the entire deck, carried up not less than 152 mm (6 in.) on all sides. Deck boxes shall be lined in accordance with the above alternative method. Boxes for small batteries shall be lined to a depth of 76 mm (3 in.), consistent with the methods described above.

3.2.4.5 Maintenance of Batteries

3.2.4.5(a) Maintenance Schedule of Batteries. Where batteries are fitted for use for essential and emergency services, a maintenance schedule of such batteries shall be provided and maintained.

The schedule is to include all batteries used for essential and emergency services, including system batteries installed in battery rooms, battery lockers and deck boxes as well as batteries installed within vendor supplied equipment. Examples of batteries included with equipment are:

- Computer equipment and programmable logic controllers (PLC) used in computer based systems and programmable electronic systems, when used for essential or emergency services.
- Navigation equipment, such as the equipment required by SOLAS, Chapter V, Regulation 19.

The schedule shall be submitted for review, during their plan approval or the new building survey, and is to include at least the following information regarding the batteries.

- Type and manufacturer's type designation.
- Voltage and ampere-hour rating.
- Location.
- Equipment and/or system(s) served.
- Maintenance/replacement cycle dates.
- Date(s) of last maintenance and/or replacement.
- For replacement batteries in storage, the date of manufacture and shelf life (Refer Note below)

Note: Shelf life is the duration of storage under specified conditions at the end of which a battery retains the ability to give a specified performance.

3.2.4.5(b) Procedure of maintenance. Procedures shall be put in place to show that, where batteries are replaced, they shall be of an equivalent performance type. Details of the schedule, procedures, and the maintenance records shall be included in the ship's safety management system and integrated into the ship's operational maintenance routine, as appropriate, which shall be verified by the Surveyor.

3.2.4.6 Replacement of Batteries

Where a vented type battery (Refer Note 1) replaces a valve-regulated, sealed type battery (Refer Note 2), the requirements in Chapter 6 Sect 3[3.2.4.2.] and Chapter 6 Sect 3 [3.2.4.3.] shall be complied with on the basis of the charging capacity.

Notes:

1 A vented battery is one in which the cells have a cover provided with an opening through which products of electrolysis and evaporation are allowed to escape freely from the cells to atmosphere.

2 A valve-regulated battery is one in which cells are closed but have an arrangement (valve) which allows the escape of gas if the internal pressure exceeds a predetermined value.

3.2.5 Switchboard

Switchboards shall be so arranged as to give easy access as may be needed to apparatus and equipment, without danger to personnel. Switchboards shall be located in a dry place so as to provide a clear working space of at least 900 mm (35 in.) at the front of the switchboard and a clearance of at least 600 mm (24 in.) at the rear which may be reduced to 457 mm (18 in.) in way of stiffeners or frames, except that for switchboards which are enclosed at the rear and are fully serviceable from the front, clearance at the rear will not be required unless necessary for cooling. Switchboards shall be secured to a solid foundation. They shall be self-supported or be braced to the bulkhead or the deck above. In case the last method is used, means of bracing shall be flexible to allow deflection of the deck without buckling the assembly structure.

3.2.6 Distribution Boards

3.2.6.1 Location and Protection

Distribution boards shall be located in accessible positions and not in such space as bunkers, storerooms, cargo holds or compartments allotted alternately to passengers or cargo. Distribution boards may be located behind panels/linings within accommodation spaces, including stairway enclosures, without the need to categorize the space to a fire integrity standard, provided no provision is made for storage. Distribution boards are to have approved noncombustible, non-hygroscopic enclosures. Metal enclosures and all exposed metal parts in nonmetallic enclosures shall be earthed to the vessel's structure. All cases shall be of adequate mechanical strength.

3.2.6.2 Switchboard-type Distribution Boards

Distribution boards of the switchboard type, unless installed in machinery spaces or in compartments assigned exclusively to electric equipment and accessible only to authorized personnel, shall be completely enclosed or protected against accidental contact and unauthorized operation.

3.2.6.3 Safety-type Panels

If the method of operation demands the handling of switches by persons unfamiliar with electrical equipment, the distribution board shall be of the safety type. This type of distribution board shall be used for controlling branch lighting circuits. Dead front type panels shall be used where voltage to earth is in excess of 50 volts DC or 50 volts AC rms between conductors.

3.2.6.4 Lighting Distribution Boards

To prevent the simultaneous loss of main and emergency lighting distribution boards due to localized fire or other casualty, these distribution boards shall be installed as widely apart as practicable in the machinery spaces.

For spaces other than the machinery space (e.g. accommodation space, ro-ro cargo spaces, etc.), these lighting distribution boards shall be installed at locations which are separated by a boundary wall. For the navigation bridge, the main and emergency lighting distribution boards are not to be installed in the same compartment of the navigation console or panel.

Cables emanating from the main or emergency lighting switchboard to the main or emergency lighting distribution board respectively are also to be installed as widely apart as practicable. Refer also Chapter 6 Sect 2[2.7.1.2]

3.2.7 Motor Controllers and Control Centers

3.2.7.1 Location and Installation

Motor control centers shall be located in a dry place. Clear working space shall be provided around motor control centers to enable doors to be fully opened and equipment removed for maintenance and replacement. Motor control centers shall be secured to a solid foundation, be self-supported or be braced to the bulkhead.

3.2.7.2 Disconnecting Arrangements

3.2.7.2(a) Device. Means shall be provided for disconnecting the motor and controller from all supply conductors, except that a manually operated switch or circuit breaker may serve as both controller and disconnecting means .Refer Chapter 6 Sect 4[4.4.9.2]

3.2.7.2(b) Location The disconnecting device may be in the same enclosure with the controller or may be in a separate enclosure, and shall be externally operated. Except for remotely controlled fire extinguishing purpose motors, the branch-circuit switch or circuit breaker on the power-distribution board or switchboard may serve as the disconnect device if in the same compartment with the controller.

3.2.7.2(c) Locking Means . If the disconnecting device shall not within sight of both motor and controller, or if it is more than 15.25 m (50 ft) from either, it shall be arranged for locking in the open position. For remotely controlled fire extinguishing purpose motors, the locking means shall be provided at the feeder circuit breaker for such motors.

3.2.7.2(d) Identification Plate. The disconnect switch, if not adjacent to the controller, shall be provided with an identification plate.

3.2.7.2(e) Open and Close Indications. The disconnect device is to indicate by a position of the handle, or otherwise, whether it is open or closed.

3.2.7.3 Indicating-light Circuits

Where indicating-light circuits are employed, their potential shall be limited to 150 volts if the opening of the foregoing disconnecting devices does not de-energize the indicating circuit.

3.2.8 Resistors for Control Apparatus

The resistor shall be protected against corrosion either by rust-proofing or embedding in a protective material. Resistors shall be located in well-ventilated compartments and shall be mounted with ample clearances, about 305 mm (12 in.), to prevent excessive heating of adjacent vessel's structure or dangerous overheating of unprotected combustible material. The arrangement of the electrical equipment and wiring located within these spaces shall be such as to prevent their exposure to ambient temperatures in excess of that for which they have been designed.

3.2.9 Lighting Fixtures

Lighting fixtures shall be so arranged as to prevent temperature rises which could damage the cables and wiring, and to prevent surrounding material from becoming excessively hot.

3.2.10 Heating Equipment

Electric radiators, if used, shall be fixed in position and be so constructed as to reduce fire risks to a minimum. Electric radiators of the exposed-element type are not to be used.

3.2.11 Magnetic Compasses

Precautions shall be taken in connection with apparatus and wiring in the vicinity of the magnetic compass to prevent disturbance of the needle from external magnetic fields.

3.2.12 Portable Equipment and Outlets

Portable equipment are not to be used in cargo oil pump rooms or other hazardous areas nor are portable lights to be used for berth lights in passenger accommodations or crew's quarters.

3.2.13 Receptacles and Plugs of Different Ratings

Receptacles and plugs of different electrical ratings are not to be interchangeable. In cases where it is necessary to use 230 volt portable equipment, the receptacles for their attachment shall be of a type which will not permit attaching 115 volt equipment.

3.2.14 Installation Requirements for Recovery from Dead Ship Condition

Means shall be provided to ensure that machinery can be brought into operation from the dead ship condition without external aid. Refer Chapter 6 Sect 2[2.2.1.3]

Where the emergency source of power is an emergency generator which complies with Ch 6 Sect 2[2.3.8] and Ch 6 Sect 2[2.2.1.3], this emergency generator may be used for restoring operation of the main propulsion plant, boilers and auxiliary machinery.

Where there is no emergency generator installed, the arrangements for bringing main and auxiliary machinery into operation shall be such that the initial charge of starting air or initial electrical power and any power supplies for engine operation can be developed onboard ship without external aid. If for this purpose an emergency air compressor or an electric generator is required, these units shall be powered by a hand- starting oil engine or a hand-operated compressor.

The arrangements for bringing the main and auxiliary machinery into operation shall have a capacity such that the starting energy and any power supplies for propulsion engine operation are available within 30 minutes of a blackout condition.

3.2.15 Services Required to be Operable Under a Fire Condition

For the purpose of Chapter 6 Sect 3[3.3.10.2], services required to be operable under a fire condition include, but not limited thereto, are the following:

a. Fire extinguishing system including fire extinguishing medium release alarms;

b. Fire detection system;

c. Fire and general alarm system;

d. Emergency fire pump;

e. Control and power systems for all power operated watertight doors and their status indicating systems;

f. Control and power systems for all power operated fire doors and their status indicating systems;

g. Public address system;

h. Low location lighting;

i. Emergency lighting;

j. Remote emergency stop/shutdown arrangement for systems which may support the propagation of fire and/or explosion.

3.2.16 High fire risk areas' are defined as follows:

a. Machinery spaces, as defined in Chapter 2 Sect 1[1.7.1] and [1.7.2] of this rule book.

b. Spaces containing fuel treatment equipment and other highly flammable substances;

c. Galleys and pantries containing cooking appliances;

d. Laundries containing drying equipment;

e. Hazardous zones and spaces;

f. For passenger ships carrying more than 36 passengers:

i. Public spaces containing furniture and furnishings of other than restricted fire risk and having a deck area of 50 m^2 or more;

ii. Barber shops and beauty parlors; and

iii. Saunas.

Requests to exempt spaces may be considered when evidence is submitted that demonstrates emergency services will remain available in the event of a fire in the space (e.g. studies of fire protection measures, installation locations, system redundancy etc.).

3.3 Cable Installation

3.3.1 General Considerations

a) Runs of Cables

In accommodation spaces, high voltage cables are to be run in enclosed cable transit systems.

b) Segregation

High voltage cables of different voltage ratings are not to be installed in the same cable bunch, duct, pipe or box.

Where high voltage cables of different voltage ratings are installed on the same cable tray, the air clearance between cables is not to be less than the minimum air clearance for the higher voltage side . However, high voltage cables are not to be installed on the same cable tray for the cables operating at the nominal system voltage of 1 kV or less.

c) Installation Arrangements

High voltage cables are to be installed on cable trays or equivalent when they are provided with a continuous metallic sheath or armor which is effectively bonded to earth; otherwise, they are to be installed for their entire length in metallic casings effectively bonded to earth.

d) Termination and Splices

Terminations in all conductors of high voltage cables are to be, as far as practicable, effectively covered with suitable insulating material. In terminal boxes, if conductors are not insulated, phases are to be separated from earth and from each other by substantial barriers of suitable insulating materials. High voltage cables of the radial field type, i.e., having a conductive layer to control the electric field within the insulation, are to have terminations which provide electric stress control.

Terminations are to be of a type compatible with the insulation and jacket material of the cable and are to be provided with means to ground all metallic shielding components (i.e., tapes, wires etc).

e) Marking

High voltage cables are to be readily identifiable by suitable marking

3.3.1.1 Paint on Cables

Paint or any other coating is systematically and intentionally applied on the electric cables, it shall be established that the mechanical and fire performance properties of the cable are not adversely affected.

In this regard:

i).Fire retardant property shall be confirmed to be in compliance with Chapter 6 Sect 4[4.8.1.2]

ii) It shall be confirmed that the paint and the solvent used will not cause damages to the cable sheath, e.g., cracking.

Overspray on cables or painted exterior cables are not subject to the requirements of this section.

3.3.1.2 Cable Installation above High Voltage Switchgear and Control-gear

Where a pressure relief flap is provided for high voltage switchgear and high voltage control-gear, the cables are not to be installed near and above this equipment in order to prevent the damage of cables from the flare/flame released from the relief flap upon occurrence of short circuit in this equipment.

3.3.1.3 Ultra Violet (UV) Light Protection for Wiring Insulation within Fluorescent Light Fixtures

Where the supply cable's outer sheathing or covering is removed once the cable enters a fluorescent light fixture to facilitate routing and/or connection, the insulation on the individual conductors shall be protected against the possible detrimental effects of UV light exposure by one of the following:

i) The insulation shall be manufactured with additives that protect the insulation from UV light damage and a test report shall be submitted to INTLREG.

ii) Adequate shielding arrangements shall be provided inside the fixture for the entire length of the exposed insulation within the fixture.

iii) UV protective sleeves shall be installed on the full length of the exposed conductors inside the fixture during the installation.

3.3.1.4 Protection of Cables in Tanks

Where cables are installed in liquid tanks, the following arrangements shall be complied with:

1. Cables shall be installed in steel pipes with at least extra-heavy wall thickness with all joints welded and with corrosion-resistant coating.
2. Cable gland with gastight packing shall be provided for the cable at both ends of the cable conduit pipe
3. Cable inside of the vertical cable conduit pipe shall be suitably supported (e.g., by sand- filling or by strapping to a support-wire). Alternatively, the cable inside of the vertical conduit pipe may be accepted without provided support if the mechanical strength of the cable is sufficient to prevent cable damage due to the cable weight within the conduit pipe under continuous mechanical load. Supporting documentation shall be submitted to verify the mechanical strength of the cable with respect to the cable weight inside of the conduit.

3.3.2 Insulation resistance measurement

The insulation resistance of a new, clean dry machine, immediately after the temperature rise test has been carried out is to be at least 1 MΩ. Immediately after the high voltage tests the insulation resistances are to be measured using a direct current insulation tester between:

a. All current carrying parts connected together and earth;

b. All current carrying parts of different polarity or phase, where both ends of each polarity or phase can be accessed individually. The minimum values of test voltages and corresponding insulation resistances are given in following table. The insulation resistance is to be measured close to the operating temperature, or an appropriate method of calculation is to be used.

Minimum insulation resistance		
Rated voltage U_n, in V	**Minimum test voltage, in V**	**Minimum insulation resistance, in MΩ**
$U_n \leq 250$	$2 \times U_n$	1
$250 < U_n \leq 1000$	500	1
$1000 < U_n \leq 7200$	1000	$(U_n/1000) + 1$
$7200 < U_n \leq 15000$	5000	$(U_n/1000) + 1$

3.3.3 Winding resistance measurement

The resistances of the machine windings are to be measured and recorded using an appropriate bridge method or voltage and current method

3.3.4 Protection for Electric-magnetic Induction

3.3.4.1 Multiple Conductor Cables

All phase conductors of alternating-current cables shall be contained within the same sheath in order to avoid overheating due to induction by use of multiple conductor cables.

3.3.4.2 Single Conductor Cables

AC installations shall be carried out, as far as possible, in twin or multi-conductor cables. However, when it is necessary to use single conductor cables in circuits rated in excess of 20 A, the following arrangements shall be complied with:

3.3.4.2(a) Cables are supported on non-fragile insulators;

3.3.4.2(b) There shall be no magnetic materials between cables of a group; and

3.3.4.2(c) Where single conductor cables are run in bunches, each group of cables is to comprise 360 electrical degrees. To this end, in three-phase circuits, single conductor cable runs of 30 m (100 ft) or longer and having a cross-sectional area of 185 mm^2 (365,005 circ. mils) or more shall be transposed throughout the length at intervals not exceeding 15 m (50 ft) in order to equalize to some degree the impedance of the three phase circuits. Alternatively, such cables may be installed in trefoil formation.

3.3.4.3 Non-shielded Signal Cables

Except for fiber optic cables, non-shielded signal cables for automation and control systems essential for the safe operation of the vessel which may be affected by electromagnetic interference are not to be run in the same bunch with power or lighting cables.

3.3.5 **Joints and Sealing**

Cables not having a moisture-resistant insulation shall be sealed against the admission of moisture by methods such as taping in combination with insulating compound or sealing devices. Cables shall be installed in such a manner that stresses on the cable are not transmitted to the conductors. Terminations and joints in all conductors shall be so made as to retain the original electrical, flame retarding and, where necessary, fire resisting properties of the cable. Terminal boxes shall be secured in place and the moisture- resistant jacket is to extend through the cable clamp. Enclosures for outlets, switches and similar fittings shall be flame and moisture-resistant and of adequate mechanical strength and rigidity to protect the contents and to prevent distortion under all likely conditions of service. Refer Chapter 6 Sect 3[3.3.10.1] and Chapter 6 Sect 3[3.3.16]

3.3.6 **Support, Fixing and Bending**

3.3.6.1 Support and Fixing

3.3.6.1(a) Where cables are fixed by means of clips, saddles or straps, they are to have a surface area so large and shaped such that the cables remain tight without their coverings being damaged. Metal clips may be screwed directly to deck or bulkhead, except on watertight bulkheads.

3.3.6.1(b) The distances between supports shall be suitably chosen according to the type of cable and the probability of vibration, and are not to exceed 400 mm (16 in.); for a horizontal cable run where the cables are laid on cable supports in the form of tray plates, separate support brackets or hanger ladders, the spacing between the fixing points may be up to 900 mm (36 in.), provided that there are supports with maximum spacing, as specified above. This exemption does not apply to cable runs along weather decks when the cable run is arranged so that the cables can be subjected to forces by water washing over the deck.

Note: When designing a cable support system for single-core cables, consideration is also to be given to the effects of electrodynamic forces developing on the occurrence of a short-circuit.

The above-given distances between cable supports are not necessarily adequate for these cables. Further, other recognized standards for cable support and fixing will be considered.

3.3.6.1(c) The supports and the corresponding accessories shall be robust and shall be of corrosion-resistant material or suitably treated before erection to resist corrosion.

3.3.6.1(d) Cable clips or straps made from an approved material other than metal (such as polyamide, PVC) may be used.

3.3.6.1(e) When cables are fixed by means of clips or straps, referred to in Item Sect [3.3.6.1 (d)]above, and these cables are not laid on top of horizontal cable trays or cable supports, suitable metal cable clips or saddles shall be added at regular distances not exceeding 2 m (6.5 ft) in order to prevent the release of cables during a fire. This also applies to the fixing of non-metallic conduits or pipes.

Note: Item Sect [3.3.6.1 (e)] does not necessarily apply in the case of cable runs with only one or a few cables with small diameters for the connection of a lighting fitting, alarm transducer, etc.

3.3.6.1(f) Non-metallic clips, saddles or straps shall be flame retardant in accordance with IEC Publication 60092-101.

3.3.6.2 Bending Radius

For bending radius requirements, Chapter 6-Sect 3/Table 6-3-2

3.3.6.3 Plastic Cable Trays and Protective Casings

3.3.6.3(a) Installations Cable trays and protective casings made of plastic materials are to be supplemented by metallic fixing and straps such that, in the event of a fire, they and the cables affixed are prevented from falling and causing an injury to personnel and/or an obstruction to any escape route. Refer Sect [3.3.6.1 (e)]. Cable trays and protective casings made of plastic materials shall be flame retardant . Where plastic cable trays and protective casings are used on open deck, they are additionally to be protected against UV light by such as anti-UV coating or equivalent.

Note: "Plastic" means both thermoplastic and thermosetting plastic materials with or without reinforcement, such as PVC and fiber reinforced plastics (FRP). "Protective casing" means a closed cover in the form of a pipe or other closed ducts of non-circular shape.

3.3.6.3(b) Safe Working Load The load on the cable trays and protective casings shall be within the Safe Working Load (SWL). The support spacing shall be not greater than the manufacturer's recommendation nor in excess of the spacing at the SWL test . In general, the spacing shall not to exceed 2 meters.Refer Part 6- Chapter 6-Sect 4[4.7]

Note: The selection and spacing of cable tray and protective casing supports are to take into account:

- Dimensions of the cable trays and the protective casings;
- Mechanical and physical properties of their material;
- Mass of the cable trays/protective casings;
- Loads due to weight of cables, external forces, thrust forces and vibrations;
- Maximum accelerations to which the system may be subjected;

3.3.6.4 Combination of loads.

3.3.6.4(a) Cable occupation ratio in protective casing. The sum of the total cross-sectional area of all cables on the basis of their external diameter shall not to exceed 40% of the internal cross- sectional area of the protective casing. This does not apply to a single cable in a protective casing.

3.3.6.4(b)Hazardous areas Cable trays and protective casings passing through hazardous areas shall be electrically conductive. Refer Part 6- Chapter 6-Sect 4[4.7] and [4.16]

3.3.6.4(c) Type Testing Cable trays and protective casings made of plastic materials are to be type tested Refer Part 6- Chapter 6-Sect 4 [4.7] of the *INTLREG Rules for Building and Classing Steel Vessels*. Alternate test procedures for impact resistance test, safe working load test, flame retardant test, smoke and toxicity tests and/or resistivity test from an international or national standard may be considered instead of the test specified Refer Part 6- Chapter 6-Sect4 [4.7] The type test reports shall be submitted for review.

3.3.7 Cable Run in Bunches

3.3.7.1 Reduction of Current Rating

Where cables which may be expected to operate simultaneously are laid close together in a cable bunch in such a way that there is an absence of free air circulation around them, the following reduction factor shall be applied to the current rating obtained from Part 5B-6-4/Table 6.4.10:

Number of Cables in One Bunch	Reduction Factor
one to six	1.0
seven to twelve	0.85

Bunches of more than twelve cables will be subject to special consideration based on the type and service of the various cables in the bunch.

3.3.7.2 Clearance and Segregation

A clearance shall be maintained between any two cable bunches of at least the diameter of the largest cable in either bunch. Otherwise, for the purpose of determining the number of cables in the bunch, the total number of cables on both sides of the clearance will be used.

3.3.7.3 Cable of Lower Conductor Temperature

The current rating of each cable in a bunch shall be determined based on the lowest conductor temperature rating of any cable in the bunch.

3.3.8 Penetration of bulkheads and decks by cable

Penetration of watertight bulkheads or decks is to be carried out with either individual watertight glands or with packed watertight boxes carrying several cables. In either case the watertight integrity and strength of the bulkheads and decks are to be maintained. Where cables with polyvinyl chloride insulation are being installed particular care is to be taken to avoid damage to the sheathing during the fitting of watertight bulkhead glands.

Where fire-resisting or fire-retarding bulkheads or decks are drilled for the passage of cables all arrangements are to be such that this fire resisting or fire retarding property and strength are not diminished.

Where cables pass through gastight bulkheads or decks separating hazardous zones or spaces arrangements are to be such that the gastight integrity and strength of the bulkhead or deck are not impaired.

Where cables pass through non-watertight bulkheads or structural steel the holes are to be bushed in order to protect the cables with lead or other approved material which will prevent damage to the cables by abrasion. If the steel is 6 mm thick adequately rounded edges may be accepted as the equivalent of bushing.

No cable is allowed to penetrate the collision bulkhead.

Cables passing through decks are to be protected by deck tubes or ducts.

Materials used for glands and bushings are to be such that there is no risk of corrosion.

Where rectangular holes are cut in bulkheads or structural steel the corners are to be adequately rounded.

The distance from cable penetrations to flanges of steam pipes or hot oil pipes is to be not less than 500 mm.

Where cables pass through thermal insulation they are to do so at right angles in tubes sealed at both ends.

For penetration through insulated, refrigerated space bulkheads, cables are to be installed in phenolic pipes or similar heat-insulating material. The pipe may be inserted through the bulkhead stuffing tube or joined directly to the bulkhead penetration piece

3.3.8.1 Watertight and Fire-rated Deck and Bulkhead Cable Penetrations

During installation of deck and bulkhead watertight and fire-rated cable penetrations, the attending Surveyor is to confirm that the installer is familiar with and has access to the manufacturer's installation procedures for stuffing tubes, transit devices or pourable materials.

After installation, all watertight and fire-rated cable penetrations shall be visually examined. Watertight cable penetrations shall be tested as required by Part 6/chapter 1/sect 3/ [3.1.1.10]

3.3.9 Mechanical Protection

3.3.9.1 Metallic Armor

Electric cables installed in locations liable to damage during normal operation of the vessel shall be provided with braided, metallic armor and be otherwise suitably protected from mechanical injury, as appropriate for the location. Refer also Chapter 6 Sect 3[3.6.1.3]

3.3.9.2 Conduit Pipe or Structural Shapes

Where cables are installed in locations in way of cargo ports, hatches, tank tops, open decks subject to seas, and where passing through decks, they shall be protected by substantial metal shields, structural shapes, pipe or other equivalent means. All such coverings shall be of sufficient strength to provide effective protection to the cables. When expansion bends are fitted, they shall be accessible for maintenance. Where cables are installed in metal piping or in a metal conduit system, such piping and systems shall be earthed and shall be mechanically and electrically continuous across all joints.

3.3.10 Emergency and Essential Feeders

3.3.10.1 Location

As far as practicable, cables and wiring for emergency and essential services, including those listed in Chapter 6 Sect 3[3.2.15], are not to pass through high fire risk areas .Refer Chapter 6 Sect 3[3.2.16] For Emergency Fire Pumps, Refer requirements in Chapter 6 Sect 3[3.3.10.3]

These cables and wiring are also to be run in such a manner as to preclude their being rendered unserviceable by heating of the bulkheads that may be caused by a fire in an adjacent space.
In those cases when it is not possible for the cables and wiring to be routed clear of high fire risk areas, the methods applicable to passenger vessels in Part 6- Chapter 6-Sect 4[4.14.2.]

3.3.10.2 Services Necessary Under a Fire Condition

Where cables for services required to be operable under a fire condition .Refer Chapter 6 Sect 3[3.2.15], including their power supplies pass through high fire risk areas other than those which they serve, they shall be so arranged that a fire in any of these areas or zones does not affect the operation of the service in any other area or zone. For Emergency Fire Pumps, Refer requirements in Chapter 6 Sect 3[3.3.10.3] This may be accomplished by any of the following measures:

3.3.9.2(a) Fire resistant cables in accordance with Chapter 6 Sect 4[4.8.1.3]are installed and run continuous to keep the fire integrity within the high fire risk area. Refer Chapter 6-Sect 3/Figure 6.3.2.below

FIGURE 6.3.2
Cables within High Fire Risk Areas

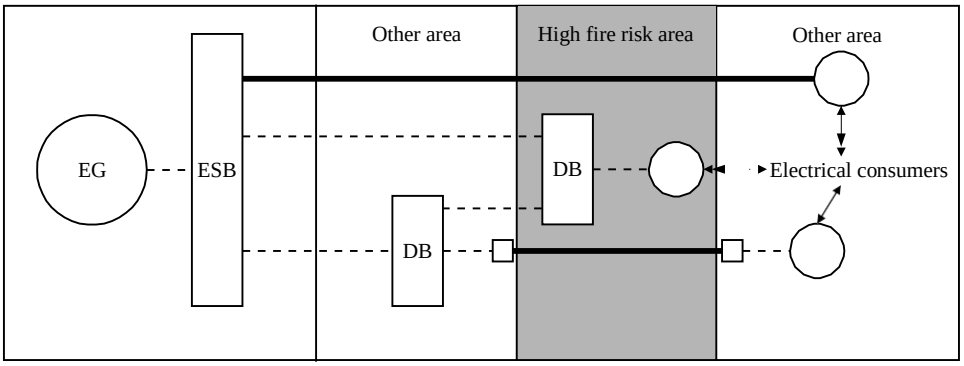

Fire resistant cable Flame retardant cable Connection box

3.3.9.2(b) At *least* two loops/radial distributions run as widely apart as is practicable and so arranged that in the event of damage by fire at least one of the loops/radial distributions remains operational.

Systems that are self-monitoring, fail safe or duplicated with cable runs separated as widely as practicable, may be exempted from the requirements in Sect 3[3.3..2] a) and Sect 3[3.3..2] b) above

3.3.10.3 Electrical Cables for the Emergency Fire Pump

The electrical cables to the emergency fire pump are not to pass through the machinery spaces containing the main fire pumps and their sources of power and prime movers. They shall be of a fire resistant type, in accordance with Chapter 6 Sect 4[4.8.1.3 where they pass through other high fire risk areas.

3.3.10.4 Requirements by the Governmental Authority

Attention is directed to the requirements of the governmental authority of the country whose flag the vessel flies for the installation of emergency circuits required in various types of vessels.

3.3.11 Mineral Insulated Cables

At all points where mineral-insulated metal-sheathed cable terminates, an approved seal shall be provided immediately after stripping to prevent entrance of moisture into the mineral insulation. In addition, the conductors extending beyond the sheath shall be insulated with an approved insulating material. When mineral-insulated cable is connected to boxes or equipment, the fittings shall be approved for the conditions of service. The connections shall be in accordance with the manufacturer's installation recommendation.

3.3.12 Fiber Optic Cables

The installation of fiber optic cables shall be in accordance with the manufacturer's recommendations to prevent sharp bends where the fiber optic cables enter the equipment enclosure. Consideration shall be given to the use of angled stuffing tubes. The cables shall be installed so as to avoid abrading, crushing, twisting, kinking or pulling around sharp edges.

3.3.13 Battery Room

Where cables enter battery rooms, the holes shall be bushed, as required for watertight bulkheads in Chapter 6 Sect 3[3.3.8]. All connections within battery rooms shall be resistant to the electrolyte. Cables shall be sealed to resist the entrance of electrolyte by spray or creepage. The size of the connecting cable shall be based on current-carrying capacities given in Chapter 6-Sect 4/Table 6.4.10 and the starting rate of charge or maximum discharge rate, whichever is the greater, shall be taken into consideration in determining the cable size

3.3.14 Paneling and Dome Fixtures

Cables may be installed behind paneling, provided all connections are accessible and the location of concealed connection boxes is indicated. Where a cable strip molding is used for cable installation on the incombustible paneling, it shall be of incombustible material. Dome fixtures shall be installed so that they are vented or they shall be fitted with fire-resistant material in such a manner as to protect the insulated wiring leading to the lamps and any exposed woodwork from excessive temperature.

3.3.15 Sheathing and Structural Insulation

Cables may be installed behind sheathing, but they are not to be installed behind nor imbedded in structural insulation. They are to pass through such insulation at right angles and shall be protected by a continuous pipe with a stuffing tube at one end. For deck penetrations, this stuffing tube shall be at the upper end of the pipe and for bulkhead penetrations, it shall be on the uninsulated side of the bulkhead. For refrigerated- space insulation, the pipe shall be of phenolic or similar heat-insulating material joined to the bulkhead stuffing tube, or a section of such material shall be inserted between the bulkhead stuffing tube and the metallic pipe.

3.3.16 Splicing of Electrical Cables

3.3.16.1 Basis of Approval

Replacement insulation shall be fire-resistant and shall be equivalent in electrical and thermal properties to the original insulation. The replacement jacket shall be at least equivalent to the original impervious sheath and is to assure a watertight splice. Splices shall be made using an approved splice kit which contains the following:

- Connector of correct size and number
- Replacement insulation
- Replacement jacket
- Instructions for use

In addition, prior to approval of a splicing kit, it will be required that completed splices be tested for fire resistance, water tightness, dielectric strength, etc. to the satisfaction of the Surveyor. This requirement may be modified for splice kits which have had such tests conducted and reported on by an independent agency acceptable to INTLREG.

3.3.16.2 Installation

All splices shall be made after the cable is in place and shall be accessible for inspection. The conductor splice shall be made using a pressure type butt connector by use of a one-cycle compression tool. Refer Chapter 6 Sect 3[.6.1.3] for splices in hazardous area.

3.3.16.3 Protection

Splices may be located in protected enclosures or in open wireways. Armored cables having splices will not be required to have the armor replaced, provided that the remaining armor has been earthed in compliance with Chapter 6 Sect 3[3.4.5] or provided that the armor is made electrically continuous. Splices shall be so located such that stresses (as from the weight of the cable) are not carried by the splice.

3.3.17 Splicing of Fiber Optic Cables

Splicing of fiber optic cables shall be made by means of approved mechanical or fusion methods.

3.3.18 Cable Junction Box

Except for propulsion cables, junction boxes may be used in the installation of electric cables aboard the vessel, provided the plans required by Chapter 6 Setc 3[3.1.2] for junction boxes are submitted and the following requirements are complied with.

3.3.18.1

The design and construction of the junction boxes are to comply with Sect 3.[3.18.2] below

3.3.18.2 The junction boxes shall be suitable for the environment in which they are installed (i.e. explosion-proof in hazardous areas, watertight or weather tight on deck, etc.).

3.3.18.3

Separate junction boxes shall be used for feeders and circuits of each of the following rated voltage levels:

3.3.18.3(a) Rated voltage levels not exceeding those specified in Sect 3 [3.4.1] i)below

3.3.18.3(b) Rated voltage levels exceeding those in [3.3.18.3]a)above up to and including 1 kV. A physical barrier shall be used within the junction box to separate distribution systems of different rated voltages, such as 480 V, 600 V and 750 V.

3.3.18.3(c) Rated voltage levels exceeding 1 kV. Separate junction boxes shall be used for each of the rated voltage levels exceeding 1 kV.

Each junction box and the compartment in the junction box separated by a physical barrier shall be appropriately identified as regards the rated voltage of the feeders and circuits that it contains. A physical barrier may be used in lieu of two separate junction boxes for circuits having rated voltage levels corresponding to those in either Section [3.3.18.3]a) or [3.3.18.3]b)of above

3.3.18.4

The junction boxes for emergency feeders and circuits shall be separate from those used for normal ship service feeders and circuits.

3.3.18.5

Cables shall be supported, as necessary, within junction boxes so as not to put stress (as from the weight of the cable) on the cable contact mountings. The connections shall be provided with locking type connections.

In addition to the above, the applicable requirements in Chapter 6 Sect 3[3.3] and Chapter 6 Sect 4[4.8] regarding cable installation and application details shall be complied with.

3.4 Earthing

3.4.1 General

Exposed metal parts of electrical machines or equipment which are not intended to be live but which are liable under fault conditions to become live shall be earthed unless the machines or equipment are:

i. supplied at a voltage not exceeding 50 volts DC or 50 volts AC rms between conductors; auto-transformers are not to be used for the purpose of achieving this voltage; or

ii. Supplied at a voltage not exceeding 250 V AC rms by safety isolating transformers supplying only one consuming device; or

ii) Constructed in accordance with the principle of double insulation.

3.4.2 Permanent Equipment

The metal frames or cases of all permanently installed generators, motors, controllers, instruments and similar equipment shall be permanently earthed through a metallic contact with the vessel's structure. Alternatively, they shall be connected to the hull by a separate conductor, in accordance with Sect 3[3.4.3] below Where outlets, switches and similar fittings are of non-metallic construction, all exposed metal parts shall be earthed.

3.4.3 Connections

3.4.3.1 General

All earthing conductors shall be of copper or other corrosion-resistant material and shall be protected against damage. The nominal cross-sectional area of every copper earthing conductor shall be not less than that required by Chapter 6 Sect 3/Table 6.3.3

3.4.3.2 Earthed Distribution System

Earthing conductors in an earthed distribution system are to comply with Sect [3.4.3.1[above, except that the earthing conductor in line C4 of Table 6.3.3

3.4.3.3 Connection to Hull Structure

All connections of an earth-continuity conductor or earthing lead to the vessel's structure shall be made in an accessible position and be secured by a screw of brass or other corrosion-resistant material having a cross-sectional area equivalent to the earth-continuity conductor or earthing lead, but not less than 4 mm (0.16 in.) in diameter. The earth connection screw shall be used for this purpose only. Refer Chapter 4 Sect 1[1.5.12] for control of static electricity.

3.4.4 Portable Cords

Receptacle outlets operating at 50 volts DC or 50 volts AC rms or more are to have an earthing pole.

3.4.5 Cable Metallic Covering

All metal sheaths, armor of cable and mineral-insulated, metal-sheathed cable shall be electrically continuous and shall be earthed to the metal hull at each end of the run, except that final sub-circuits may be earthed at the supply end only. All metallic coverings of power and lighting cables passing through hazardous areas or connected to equipment in such an area shall be earthed at least at each end. Refer also Chapter 7 Sect 2[2.8.5.3]

3.4.6 Lightning Earth Conductors

Each wooden mast or topmast shall be fitted with lightning earth conductors. They need not be fitted to steel masts.

3.5 Installation in Cargo Hold for Dry Bulk Cargoes

3.5.1 Equipment

The installation of electrical equipment in cargo holds for dry bulk cargoes shall be limited to only that which is absolutely necessary. Where electrical equipment must be installed in such spaces, it shall be protected from mechanical damage. All electrical equipment in cargo holds or spaces through which cargo passes is to have an IP55 enclosure, Refer Chapter 6 Sect 1[1.9]

3.5.2 Self-Unloading Controls and Alarms

3.5.2.1 General

Where vessels are equipped with self-unloading systems, controls shall be provided for the safe operation of the self-unloading system. These controls shall be clearly marked to show their functions. Energizing the power unit at a location other than the cargo control station shall not to set the gear in motion.

3.5.2.1.1 Monitors

As appropriate, monitoring is to indicate the system operational status (operating or not operating), availability of power, overload alarm, air pressure, hydraulic pressure, electrical power or current, motor running and motor overload and brake mechanism engagement.

3.5.2.1.2 Emergency Shutdowns

Remote emergency shutdowns of power units for self-unloading equipment shall be provided outside of the power unit space so that they may be stopped in the event of fire or other emergency. Where remote controls are provided for cargo gear operation, means for the local emergency shutdowns shall be provided.

3.6 Equipment and Installation in Hazardous Areas

3.6.1 General Considerations

3.6.1.1 General

Electrical equipment and wiring are not to be installed in hazardous areas unless essential for operational purposes. Generally electrical equipment certified for use in hazardous areas in accordance with the IEC 60079 series is considered suitable for use in temperatures from –20°C to 40°C (–4°F to 104°F). Account shall be taken of the temperature at the point of installation when selecting electrical equipment for installation in hazardous areas.

3.6.1.1(a) Electrical Equipment Types - Only electrical equipment of the following types, complying with IEC Publication 60079 series or other recognized standards, shall be considered for installation in hazardous areas.

- Intrinsically safe type (Ex i)
- Flameproof (explosion-proof) type (Ex d)
- Increased safety type (Ex e)
- Pressurized or purged type (Ex p)

Consideration shall be given to the flammability group and the temperature class of the equipment for suitability for the intended hazardous area, Refer IEC Publication 60079-20.

3.6.1.1(b) Fans. Fans used for the ventilation of the hazardous areas shall be of non-sparking construction in accordance with Chapter 6 Sect 3[3.6.4]

3.6.1.2 Lighting Circuits

All switches and protective devices for lighting fixtures in hazardous areas are to interrupt all poles or phases and shall be located in a non-hazardous area. However, a switch may be located in a hazardous area if the switch is of a certified safe type for the hazardous location in which it shall be installed. On solidly grounded distribution systems, the switches need not open the grounded conductor. The switches and protective devices for lighting fixtures shall be suitably labeled for identification purposes.

3.6.1.3 Cables Installation

Cables in hazardous areas shall be armored or mineral-insulated metal-sheathed, except for cables of intrinsically safe circuits subject to the requirements of Part 6-6-4/[4.16]. Where cables pass through hazardous area boundaries, they shall be run through gastight fittings. No splices are allowed in hazardous areas, except in intrinsically-safe circuits.

3.6.1.4 Permanent Warning Plates

Permanent warning plates shall be installed in the vicinity of hazardous areas in which electrical equipment is installed, such as the pump room, to advise personnel carrying out maintenance, repair or surveys of the availability of the booklet/list of equipment in hazardous areas referenced in Chapter 6 Sect 3[3.1.3], if required for their use.

3.6.2 Certified-safe Type and Pressurized Equipment and Systems

3.6.2.1 Installation Approval

Electrical equipment in hazardous areas shall be of a type suitable for such locations. Where permitted by the Rules, electrical equipment of a certified safe type, such as explosion-proof type and intrinsically-safe electrical instruments, circuitry and devices, will be approved for installation, provided such equipment has been type-tested and certified by a competent independent testing laboratory as explosion-proof or intrinsically-safe and provided that there is no departure in the production equipment from the design so tested and approved.

3.6.2.2 Intrinsically-safe System

3.6.2.2(a) Installation of Cables and Wiring. Installations with intrinsically safe circuits shall be erected in such a way that their intrinsic safety shall not adversely affected by external electric or magnetic fields under normal operating condition and any fault conditions, such as a single-phase short circuit or earth fault in non-intrinsically safe circuits, etc.

3.6.2.2(b) Separation and Mechanical Protection. The installation of the cables shall be arranged as follows:

i) Cables in both hazardous and non-hazardous areas are to meet one of the following requirements:

- Intrinsically safe circuit cables shall be installed a minimum of 50 mm (2 in.) from all non-intrinsically safe circuit cables, or
- Intrinsically safe circuit cables shall be so placed as to protect against the risk of mechanical damage by use of a mechanical barrier, or
- Intrinsically safe or non-intrinsically safe circuit cables shall be armored, metal sheathed or screened.

ii) Conductors of intrinsically safe circuits and non-intrinsically safe circuits are not to be carried in the same cable.

iii) Cables of intrinsically safe circuits and non-intrinsically safe circuits are not to be in the same bundle, duct or conduit pipe.

iv) Each unused core in a multi-core cable shall be adequately insulated from earth and from each other at both ends by the use of suitable terminations.

3.6.2.2(c) Sub-compartment. When intrinsically safe components are located by necessity within enclosures that contain non-intrinsically safe systems, such as control consoles and motor starters, such components shall be effectively isolated in a sub-compartment by earthed metallic or nonmetallic insulating barriers having a cover or panel secured by bolts, locks, Allen-screws, or other approved methods. The intrinsic safety in the sub-compartment shall not to be adversely affected by external electric or magnetic fields under normal operating condition and any fault conditions in non-intrinsically safe circuits.

3.6.2.2(d) Termination Arrangements. Where it is impracticable to arrange the terminals of intrinsically safe circuit in the sub-compartment, they shall be separated from those for non- intrinsically safe circuits by either of the following methods. Other National or International recognized Standards will also be accepted.

i) When separation is accomplished by distance, then the clearance between terminals shall be at least 50 mm, or

ii) When separation is accomplished by use of an insulating partition or earthed metal partition, the partitions are to extend to within 1.5 mm of the walls of the enclosure, or alternatively provide a minimum measurement of 50 mm between the terminals when taken in any direction around the partition.

3.6.2.2(e) Identification Plate. The terminals and sub-compartment for intrinsically safe circuit and components are to have a nameplate indicating that the equipment within is intrinsically safe and that unauthorized modification or repairs are prohibited.

3.6.2.2(f) Replacement. Unless specifically approved, replacement equipment for intrinsically-safe circuits shall be identical to the original equipment.

3.6.2.3 Pressurized Equipment

Pressurized equipment is to consist of separately ventilated enclosures supplied with positive- pressure ventilation from a closed-loop system or from a source outside the hazardous areas, and provision shall be made such that the equipment cannot be energized until the enclosure has been purged with a minimum of ten air changes and required pressure is obtained. Ventilating pipes are to have a minimum wall thickness of 3 mm (0.12 in. or 11 gage). In the case of loss of pressurization, power shall be automatically removed from the equipment, unless this would result in a condition more hazardous than that created by failure to de-energize the equipment. In this case, in lieu of removal of power, an audible and visual alarm shall be provided at a normally manned control station.

Pressurized equipment in compliance with IEC Pub. 60079-2, NFPA 496 or other recognized standard will also be acceptable.

3.6.3 Paint Stores

3.6.3.1 General

Electrical equipment in paint stores and in ventilation ducts serving such spaces as permitted in Chapter 6 Sect 3[3.6.1.1] is to comply with the requirements for group IIB class T3 in IEC Publication 60079-20-1.

The following type of equipment will be acceptable for such spaces.

i) Intrinsically-safe defined by Chapter 6 Sect 1[1.2.11]

ii) Explosion-proof defined by Chapter 6 Sect 1[1.2.5]]

iii) Pressurized defined by Chapter 6 Sect 1[1.2.22]

iv) Increased safety defined by Chapter 6 Sect 1[1.2.9]

v) Other equipment with special protection recognized as safe for use in explosive gas atmospheres by a national or other appropriate authority.

3.6.3.2 Open Area Near Ventilation Openings

In the areas on open deck within 1 m (3.3 ft) of the ventilation inlet or within 1 m (3.3 ft) (if natural) or 3 m (10 ft) (if mechanical) of the exhaust outlet, electrical equipment and cables, where permitted by Chapter 6 Sect 3[3.6.1.1], shall be in accordance with Chapter 6 Sect 3[3.6.1.2] Chapter 6 Sect 3[3.6.1.3] Chapter 6 Sect 3[3.6.2.1

3.6.3.3 Enclosed Access Spaces

The enclosed spaces giving access to the paint store may be considered as nonhazardous, provided that:

i) The door to the paint store is gastight with self-closing devices without holding back arrangements,

ii) The paint store is provided with an acceptable, independent, natural ventilation system ventilated from a safe area, and

iii) Warning notices are fitted adjacent to the paint store entrance stating that the store contains flammable liquids.

3.6.4 Non-sparking Fans

3.6.4.1 Design Criteria

3.6.4.1(a) Air Gap. The air gap between the impeller and the casing shall be not less than 10% of the shaft diameter in way of the impeller bearing, but not less than 2 mm (0.08 in.). It need not be more than 13 mm (0.5 in.).

3.6.4.1(b) Protection Screen. Protection screens of not more than 13 mm (0.5 in.) square mesh shall be fitted in the inlet and outlet of ventilation openings on the open deck to prevent the entrance of an object into the fan casing.

3.6.4.2 Materials

3.6.4.2(a) Impeller and its Housing. Except as indicated in Sect 3[3.6.4.2]c below , the impeller and the housing in way of the impeller shall be made of alloys which are recognized as being spark proof by appropriate test.

3.6.4.2(b) Electrostatic Charges. Electrostatic charges both in the rotating body and the casing shall be prevented by the use of antistatic materials. Furthermore, the installation on board of the ventilation units shall be such as to ensure the safe bonding to the hull of the units themselves.

3.6.4.2(c) Acceptable Combination of Materials. Tests referred to in Sect 3[3.6.4.2] a) above are not required for fans having the following combinations:

i) Impellers and/or housings of nonmetallic material, due regard being paid to the elimination of static electricity;

ii) Impellers and housings of non-ferrous materials;

iii) Impellers of aluminum alloys or magnesium alloys and a ferrous (including austenitic stainless steel) housing on which a ring of suitable thickness of non-ferrous materials is fitted in way of the impeller;

iv) Any combination of ferrous (including austenitic stainless steel) impellers and housings with not less than 13 mm (0.5 in.) Tip design clearance.

3.6.4.2(d) Unacceptable Combination of Materials. The following impellers and housings are considered as sparking-producing and are not permitted:

i) Impellers of an aluminum alloy or magnesium alloy and a ferrous housing, regardless of tip clearance;

ii) Housing made of an aluminum alloy or a magnesium alloy and a ferrous impeller, regardless of tip clearance;

iii) Any combination of ferrous impeller and housing with less than 13 mm (0.5 in.) design tip clearance.

3.6.4.3 Type Test

Type tests on the finished product shall be carried out using an acceptable national or international standard. Such type test reports shall be made available when requested by the Surveyor.

TABLE 6.3.1 Minimum required degrees of protection

Condition in location	Example of location	Switchboard, control gear, motor starters	Generators	Motors	Transformers	Luminaries	Heating Appliances	Cooking Appliances	Socket outlets	Accessories (e.g. switches,
Danger of touching live parts only	Dry accommodation spaces, dry control rooms	IP 20	X (1)	IP 20	IP 20	IP 20	IP 20	IP 20	IP 20	IP 20
Danger of dripping liquid and/or moderate mechanical damage	Control rooms, wheel-house, radio room	IP 22	X	IP 22	IP 22	IP 22	IP 22	IP 22	IP 22	IP 22
	Engine and boiler rooms above floor	IP 22	IP 22	IP 22	IP 22	IP 22	IP 22	IP 22	IP 44	IP 44
	Steering gear rooms	IP 22	IP 22	IP 22	IP 22	IP 22	IP 22	X	IP 44	IP 44
	Emergency machinery rooms	IP 22	IP 22	IP 22	IP 22	IP 22	IP 22	X	IP 44	IP 44
	General storerooms	IP 22	X	IP 22	IP 22	IP 22	IP 22	X	IP 22	IP 44
	Pantries	IP 22	X	IP 22	IP 22	IP 22	IP 22	IP 22	IP 44	IP 44
	Provision rooms	IP 22	X	IP 22	IP 22	IP 22	IP 22	X	IP 44	IP 44
	Ventilation ducts	X	X	IP 22	X	X	X	X	X	X
Increased danger of liquid and/or mechanical	Bathrooms and/or showers	X	X	X	X	IP 34	IP 44	X	IP 55	IP 55

damage										
	Engine and boiler rooms below floor	X	X	IP 44	X	IP 34	IP 44	X	X	IP 55
	Closed fuel oil separator rooms	IP 44	X	IP 44	IP 44	IP 34	IP 44	X	X	IP 55
	Closed lubricating oil separator rooms	IP 44	X	IP 44	IP 44	IP 34	IP 44	X	X	IP 55
Increased danger of liquid and mechanical damage	Ballast pump rooms	IP 44	X	IP 44 (2)	IP 44 (2)	IP 34	IP 44	X	IP 55	IP 55
	Refrigerated rooms	X	X	IP 44	X	IP 34	IP 44	X	IP 55	IP 55
	Galleys and laundries	IP 44	X	IP 44	IP 44	IP 34	IP 44	IP 44	IP 44	IP 44
	Public bathrooms and shower	X	X	IP 44	IP 44	IP 34	IP 44	X	IP 44	IP 44
Danger of liquid spraying, presence of cargo dust, serious mechanical damage, aggressive fumes	Shaft or pipe tunnels in double bottom	IP 55	X	IP 55	IP 55	IP 55	IP 55	X	IP 56	IP 56
	Holds for general cargo	X	X	IP 55	X	IP 55	IP 55	X	IP 56	IP 56
	Ventilation trunks	X	X	IP 55	X	X	X	X	X	X
Danger of liquid in massive quantities	Open decks	IP 56	X	IP 56	X	IP 55	IP 56	X	IP 56	IP 56

(1) The symbol "X" denotes equipment which it is not advised to install.

(2) Electric motors and starting transformers for lateral thrust propellers located in spaces similar to ballast pump rooms may have degree of protection IP 22.

Notes

1 Empty spaces shown with “-“ indicate installation of electrical equipment shall not recommended.

2 Socket outlets are not to be installed in machinery spaces below the floor plates, enclosed fuel and lubricating oil separator rooms or spaces requiring certified safe equipment.

3 “Accessories” include switches, detectors, junction boxes, etc. Accessories which are acceptable for use in hazardous areas are limited by the condition of the areas.

4 For the purpose of this Table, the wheelhouse may be categorized as a “dry control room” and consequently, the installation of IP20 equipment would suffice therein, provided that: (a) the equipment is located as to preclude being exposed to steam or dripping/spraying liquids emanating from pipe flanges, valves, ventilation ducts and outlets, etc., installed in its vicinity, and (b) the equipment is placed to preclude the possibility of being exposed to sea or rain.

5. where the equipment is located within areas protected by local fixed pressure water- spraying or water-mist fire extinguishing system and its adjacent areas.

5 Socket outlets in galleys and laundries are to maintain their protection against splashed water when not in use.

TABLE 6.3.2

Minimum Bending Radii of Cables Refer Part 5B- Chapter 6-Sect 3[3.3.5.2]

Cable Construction		Overall Diameter, D	Minimum Internal Bending Radius
Insulation	Outer Covering		
Thermoplastic or thermosetting with circular copper conductor	Unarmored or unbraided	D <= 25 mm (1 in.)	4 D
		D > 25 mm	6 D
	Metal braid screened or armored	Any	6 D
	Metal wire or metal-tape armored or metal-sheathed	Any	6 D
	Composite polyester/metal laminate tape screened units or collective tape screening	Any	8 D
Thermoplastic or thermosetting with shaped copper conductor	Any	Any	8 D
Mineral	Hard metal-sheathed	Any	6 D

TABLE 6.3.3 Size of earthing conductors (equipment and system earthing)

	Type of earthing connection	Cross-sectional area of associated current carrying conductor	Minimum cross-sectional area of copper earthing connection
1	Earth-continuity conductor in flexible cable or flexible cord	any	Same as current carrying conductor up to and including 16 mm^2 and one half above 16 mm^2 but at least 16 mm^2
2	Earth-continuity conductor incorporated in fixed cable	any	• For cables having an insulated earth-continuity conductor ○ A cross-section equal to the main conductors up to and including 16 mm^2. But minimum 1.5 mm^2 ○ A cross-section not less than 50% of the cross-section of the main

			conductor when the latter is more than 16 mm^2. But at least 16 mm^2 • For cables with a bare earth wire in direct contact with the lead sheath	
			Cross-section of main conductor (mm^2)	Earthing connection (mm^2)
			1 - 2.5 4 - 6	1 1.5
3	Separate fixed earthing conductor	<=2.5 mm^2	Same as current carrying conductor subject to minimum of 1.5 mm^2 for stranded earthing connection or 2.5 mm^2 for unstranded earthing connection	
		> 2.5 mm^2 but <= 120 mm^2	One half the cross-sectional area of the current carrying conductor. subjected to a minimum of 4 mm^2	
		> 120 mm^2	70 mm^2	

SECTION 4 MACHINERY AND EQUIPMENT

Contents

4.1 Plans and Data to Be Submitted

4.1.1 Rotating Machines of 100 kW and Over

For rotating machines of 100 kW and over intended for essential services (primary and secondary) or services mentioned in Chapter 6 Sect 4,Table 6.4.11 , drawings showing the following particulars shall be submitted: assembly, seating arrangements, terminal arrangements, shafts, coupling, coupling bolts, stator and rotor details together with data for complete rating, class of insulation, designed ambient temperature, temperature rise, degree of protection for enclosures, weights and speeds for rotating parts. Plans shall be submitted for generator prime movers.Refer Part 6 Chapter 4, Sect 1[1.1.1]

4.1.2 Switchboards, Distribution Boards,

Plans showing arrangements and details as indicated below are to be submitted for main and emergency switchboards, essential services, battery charging and discharging boards for emergency or transitional source of power:

i. Front view;

ii. Schematic diagram;

iii. Protective device rating and setting;

iv. Emergency tripping and preferential tripping features;

v. Internal power for control and instrumentation;

vi. Type and size of internal control and instrumentation wiring;

vii. Size, spacing, bracing arrangements, rated current carrying capacity and rated short-circuit current of bus bars and bus bar disconnecting device;

viii. Written description of automated functions and operations of the electrical plant.

Motor controllers

For motor controllers of 100 kW (135 hp) and over intended for essential services, plans showing the following particulars are to be submitted: front view, degree of protection for enclosure, schematic diagram, current rating of running protection of motor, and type and size of internal wiring

a. Motor Control Centers

For motor control centers with aggregate loads of 100 kW (135 hp) and over intended for essential services, plans showing the following particulars are to be submitted: front view, degree of protection for enclosure, schematic diagram, current rating of running protection of motor, and type and size of internal wiring.

b. Electric slip coupling

Plans of electric slip couplings, if fitted, showing details of construction and scantlings together along with diagrams of electrical components and control gear

4.2 Rotating Machines

4.2.1 General

4.2.1.1 Applications

All rotating electrical machines of 100 kW and over intended for essential services .Refer Chapter 6 Sect 4,Table 6.4.11 shall be designed, constructed and tested in accordance with the requirements of Sect [4.2] above

All other rotating electrical machines shall be designed, constructed, and tested in accordance with established industrial practices and manufacturer's specifications. Manufacturer's tests for rotating electric machines less than 100 kW for essential services indicated in Ch 6 Sect 4 T are to include at least the tests described in, Sect 4[4.2.2.1]b) below, regardless of the standard of construction The test certificates shall be made available when requested by the Surveyor. Acceptance of machines will be based on satisfactory performance test after installation.

4.2.1.2 Certification on Basis of an Approved Quality Assurance Program

Refer Chapter 1 Sect 1[1.2]

4.2.1.3 References

4.2.1.3(a) Inclination. For the requirements covering inclination for design condition, Refer Chapter 1 Sect 1[1.9].

4.2.1.3(b) Insulation Material. For the requirements covering insulation material, Refer Chapter 6 Sect 1[1.8[

4.2.1.3(c) Capacity of Generators. For requirements covering main generator capacity, Refer Chapter 6 Sect 2[2.2.1.2]. For requirements covering emergency generator capacity, Refer Chapter 6 Sect2[2.3.2.1]

4.2.1.3(d) Power Supply by Generators. For requirements covering power supply by main or emergency generator, Refer Chapter 6 Sect 2[2.2.1.2] and Chapter 6 Sect 2[2.3.3]respectively.

4.2.1.3(e) Protection for Generator Circuits. For requirements covering protection for generator, Refer Chapter 6 Sect 2[2.5.2] Ch 6 Sect 2[2.5.3]and Ch 6 Sect 2[2.5.4]

4.2.1.3(f) Protection for Motor Circuits. For requirements covering protection for motor branch circuit, Refer Chapter 6 Sect 2[2.5.7]

4.2.1.3(g) Installation. For requirements covering installation, Chapter 6 Sect 3[3.2.2]for Generators, Chapter 6 Sect 2[2.2.3] for motors

4.2.1.3(h) Protection Enclosures and its Selection. For requirements covering degree of the protection and the selection of equipment, Refer Chapter 6 Sect 1[1.9] and Chapter 6 Sect 3[3.2]

4.2.2 Testing and Inspection

4.2.2.1 Applications

4.2.2.1(a) Machines of 100 kW and Over. All rotating machines of 100 kW and over intended for essential services Refer Chapter 6 Sect 1[1.2.4] shall be tested in the presence of and inspected by the Surveyor, preferably at the plant of the manufacturer.

4.2.2.1(b) Machines Below 100 kW. All rotating machines of less than 100 kW intended for essential services or for services indicated in Chapter 6 Sect 4, Table 6.4.11 shall be tested in accordance with Chapter 6 Sect 4,Table 6.4.1 (item 2 through item 10 and item 12). The tests may be carried out by the manufacturer whose certificate of tests will be acceptable and shall be submitted upon request from INTLREG.

4.2.2.1(c) Other Machines. For machines not intended for essential services or for services indicated in the Chapter 6 Sect 4,Table 6.4.11–tests may be carried out by the manufacturer whose certificate of tests will be acceptable and shall be submitted upon request from INTLREG.

4.2.2.2 Special Testing Arrangements

In cases where all of the required tests are not carried out at the plant of the manufacturer, the Surveyor shall be notified and arrangements shall be made so that the remaining tests will be witnessed.

4.2.3 Insulation Resistance Measurement

The resistance shall be measured before the commencement of the testing and after completion of the testing for all circuits. Circuits or groups of circuits of different voltages above earth shall be tested separately. This test shall be made with at least 500 volts DC and the insulation resistance in meg-ohms of the circuits while at their operating temperatures shall be normally at least equal to:

Rated Voltage of the Machine ÷ Rating in (kVA/100) +1000

The minimum insulation resistance of the fields of machines separately excited with voltage less than the rated voltage of the machine shall be on the order of one-half to one mega ohm.

4.2.4 Overload and Overcurrent Capability

4.2.4.1 AC Generators

AC generators shall be capable of withstanding a current equal to 1.5 times the rated current for not less than 30 seconds. The test may be performed in conjunction with the short circuit testing, provided the electrical input energy to the machine shall not less than that required for the above overload capability.

4.2.4.2 AC Motors

4.2.4.2(a) Overcurrent Capacity~~.~~ Three phase motors, except for commutator motors, having rated outputs not exceeding 315 kW and rated voltages not exceeding 1 kV shall be capable of withstanding a current equal to 1.5 times the rated current for not less than two minutes. For three- phase and single phase motors having rated outputs above 315 kW, the overcurrent capacity shall be in accordance with the manufacturer's specification. The test may be performed at a reduced speed.

4.2.4.2(b) Overload Capacity. Three-phase induction motors shall be capable of withstanding for 15 seconds, without stalling or abrupt change in speed, an excess torque of 60% of their rated torque, the voltage and frequency being maintained at their rated values.

4.2.4.2(c) Overload Capacity for Synchronous Motors. Three phase synchronous motors shall be capable of withstanding an excess torque, as specified below, for 15 seconds without falling out of synchronism, the excitation being maintained at the value corresponding to the rated load.

Synchronous (wound rotor) induction motors:	35% excess torque
Synchronous (cylindrical rotor) motors:	35% excess torque
Synchronous (salient pole) motors:	50% excess torque

When automatic excitation is used, the limit of torque values shall be the same as with the excitation equipment operating under normal conditions.

4.2.5 Dielectric Strength of Insulation

4.2.5.1 Application

The dielectric test voltage shall be successively applied between each electric circuit and all other electric circuits and metal parts earthed, and for direct-current (DC) rotating machines between brush rings of opposite polarity. Interconnected poly phase windings shall be considered as one circuit. All windings except that under test shall be connected to earth.

4.2.5.2 Standard Voltage Test

The insulation of all rotating machines shall be tested with the parts completely assembled and not with the individual parts. The dielectric strength of the insulation shall be tested by the continuous application for 60 seconds of an alternating voltage having a frequency of 25 to 60 Hz and voltage in Chapter 6 Sect 4/Table 6.4.2 . The requirements in Chapter 6 Sect 4/Table 6.4.2 apply to those machines other than high voltage systems covered by Chapter 6 Sect 5[5.1.6.1]e)

4.2.5.3 Direct Current Test

A standard voltage test using a direct current source equal to 1.7 times the required alternating- current voltage will be acceptable.

4.2.6 Temperature Ratings

4.2.6.1 Temperature Rises

4.2.6.1(a) Continuous Rating Machines. After the machine has been run continuously under a rated load until steady temperature condition has been reached, the temperature rises are not to exceed those given in Chapter 6 Sect 4 Table 6.4.3

4.2.6.1(b) Short-time Rating Machines. After the machine has been run at a rated load during the rated time followed by a rest and a de-energized period of sufficient duration to re-establish the machine temperatures within 2°C (3.6°F) of the coolant, the temperature rises are not to exceed those given in Chapter 6 Sect 4 Table 6.4.3 .At the beginning of the temperature measurement, the temperature of the machine shall be within 5°C (8°F) of the temperature of the coolant.

4.2.6.1(c) Periodic Duty Rating Machines. The machine has been run at a rated load for the designed load cycle to be applied and continued until obtaining the practically identical temperature cycle. At the middle of the period causing the greatest heating in the last cycle of the operation, the temperature rises are not to exceed those given Part 5B-6-4/Table 6.4.3.

4.2.6.1(d) Non-periodic Duty Rating Machines. After the machine has been run continuously or intermittently under the designed variations of the load and speed within the permissible operating range until reaching the steady temperature condition, the temperature rises are not to exceed those given in Chapter 6 Sect 4 Table 6.4.3

4.2.6.1(e) Insulation Material Above 180°C (356°F). Temperature rises for insulation materials above 180°C (356°F) will be considered in accordance with Chapter 6 Sect 1[1.8.6]

4.2.6.2 Ambient Temperature

These final temperatures are based on an ambient temperature of 50°C (122°F), for machines located within boiler and engine rooms in accordance with Chapter 6 Sect 1[1.10] Where provision is made for ensuring the ambient temperature of the space is being maintained at 40°C (104°F) or less, as by air cooling or by locating the machine

outside of the boiler and engine rooms, the temperature rises of the windings may be 5°C (9°F) higher. The ambient temperature shall be taken in at least two places within 1.83 m (6 ft) of the machine under test and by thermometers having their bulbs immersed in oil contained in an open cup.

4.2.7 Construction and Assemblies

4.2.7.1 Enclosure, Frame and Pedestals

Magnet frames and pedestals may be separate but shall be secured to a common foundation.

4.2.7.2 Shafts and Couplings

4.2.7.2(a) Rotors of non-integrated auxiliary machinery. The design of the following specified rotating shafts and components, when not integral with the propulsion shafting, are to comply with the following:

- Rotor shaft: Part 5A- Chapter 2-Sect 4[4.3.2]
- Hollow shaft: Chapter 3 Sect 1[1.5.2]
- Key: Chapter 3 Sect 1[1.6],and Part 5A- Chapter 2-Sect 4[4.3]
- Coupling flanges and bolts:Chapter 2 Sect 1[1.9] and Chapter 3 Sect 1[1.11]

** Note: Rules for Building and Classing Steel Vessels*

4.2.7.2(b) Rotors of integrated auxiliary machinery Shaft motors and shaft generators, which are an integral part of the line shafting, shall be evaluated for maximum combined load (steady and dynamic torque and bending) acting within operating range of installation. Accordingly, the shaft diameter design criteria per Part 5A- Chapter 2-Sect 4[4.3.2] and Part 5A- Chapter 2-Sect 4[4.3.2.2] of the *INTLREG Rules for Building and Classing Steel Vessels* shall be evaluated for maximum torsional moment acting within the operating speeds, instead of torsional moment at rated speed.

The shaft diameter of the motors and generators, that are an integral part of the line shafting, may also be designed per Ch 3 Sect 1[1.5] and shall be evaluated based on engineering analyses.

4.2.7.3 Circulating Currents

Means shall be provided to prevent circulating currents from passing between the journals and the bearings, where the design and arrangement of the machine is such that damaging current may be expected. Where such protection is required, a warning plate shall be provided in a visible place cautioning against the removal of such protection.

4.2.7.4 Rotating Exciters

Rotating exciters are to conform to all applicable requirements for generators.

4.2.7.5 Insulation of Windings

Armature and field coils shall be treated to resist oil and water.

4.2.7.6 Protection Against Cooling Water

Where water cooling is used, the cooler shall be so arranged as to avoid entry of water into the machine, whether through leakage or from condensation in the heat exchanger.

4.2.7.7 Moisture Condensation Prevention

All generators, and each motor rated 50 kW and over, shall be provided with a means to prevent moisture condensation in the machine when idle.

When the weight of the generator and propulsion motor, excluding the shaft, is over 455 kg (1000 lb.), means are to be provided to prevent moisture condensation in the machine when idle.

4.2.7.8 Terminal Arrangements

Terminals shall be provided at an accessible position and protected against mechanical damage and accidental contact for earthing, short-circuit or touching. Terminal leads shall be secured to the frame and the designation of each terminal lead shall be clearly marked. The ends of terminal leads shall be fitted with connectors. Cable glands or similar shall be provided where cable penetrations may compromise the protection property of terminal enclosures.

4.2.7.9 Nameplates

Nameplates of corrosion-resistant material are to be provided and are to indicate at least the following, as applicable:

a. The manufacturer's serial number (or identification mark);

b. Type of machine;

c. Rating;

d. The rated voltage;

e. The rated speed

f. The rated ambient temperature;

g. The rated frequency;

h. Type of winding connections;

i. Rated exciter current;

j. The manufacturer's name;

k. The year of manufacture;

l. Degree of protection by IP code;

m. The rated output;

n. The rated current;

o. The class of insulation;

p. Number of phase;

q. The rated power factor;

r. Rated exciter voltage.

4.2.8 Lubrication

Rotating machines are to have continuous lubrication at all running speeds and all normal working bearing temperatures, with the vessel's inclinations specified in Chapter 1 Sect 1[1.9] Unless otherwise approved, where forced lubrication is employed, the machines shall be provided with means to shut down their prime movers automatically upon failure of the lubricating system. Each self-lubricating sleeve bearing shall be fitted with an inspection lid and means for visual indication of oil level or an oil gauge.

4.2.9 Turbines for Generators

Gas-turbine prime movers driving generators are to meet the applicable requirements in Part 5A- Chapter 2-Sect 3 of the *INTLREG Rules for Building and Classing Steel Vessels* and, in addition, are to comply with the following requirements.

4.2.9.1 Operating Governor

An effective operating governor shall be fitted on prime movers driving main or emergency electric generators and shall be capable of automatically maintaining the speed within the following limits. Special consideration will be given when an installation requires different characteristics.

4.2.9.1(a) Transient Frequency Variations. The transient frequency variations in the electrical network, when running at the indicated loads below, shall be within ±10% of the rated frequency when:

i)Running at full load (equal to rated output) of the generator and the maximum electrical step load is suddenly thrown off,

In the case when a step load equivalent to the rated output of a generator is thrown off, a transient frequency variation in excess of 10% of the rated frequency may be acceptable, provided the overspeed protective device, fitted in addition to the governor, as required by Sect 4[4.2.9.2] below shall not activated

ii) Running at no load and 50% of the full load of the generator is suddenly thrown on followed by the remaining 50% load after an interval sufficient to restore the frequency to steady state.

In all instances, the frequency is to return to within ±1% of the final steady state condition in no more than five seconds.

4.2.9.1(b) Frequency Variations in Steady State. The permanent frequency variation shall be within

±5% of the rated frequency at any load between no load and full load.

4.2.9.1(c) Emergency Generator Prime Movers. For gas turbines driving emergency generators, the requirements of Sect 4[4.2.9.1]a) and Sect 4[4.2.9.1]b) shall be met. However, for the purpose of Sect 4[4.2.9.1]a) ii) where the sum of all loads that can be automatically connected is larger than 50% of the full load of the emergency generator, the sum of these loads shall be used.

4.2.9.2 Over speed Governor

In addition to the normal operating governor, an over speed governor shall be fitted which will trip the turbine throttle when the rated speed is exceeded by more than 15%. Provision shall be made for hand tripping. Refer Chapter 6 Sect 4[4.2.8] for pressure-lubricated machines.

4.2.9.3 Power Output of Gas Turbines

To satisfy the requirements of Chapter 6 Sect 2[2.2.1] , the required power output of gas turbine prime movers for ship's service generator sets shall be based on the maximum expected inlet air temperature.

4.2.10 Diesel Engines for Generators

Diesel-engine prime movers are to meet the applicable requirements in Chapter 2 and, in addition, are to comply with the following requirements.

4.2.10.1 Operating Governor

An effective operating governor shall be fitted on prime movers driving main or emergency electric generators and shall be capable of automatically maintaining the speed within the following limits. Special consideration will be given when an installation requires different characteristics.

4.2.10.1(a) Transient Frequency Variations The transient frequency variations in the electrical network, when running at the indicated loads below, shall be within ±10% of the rated frequency with a recovery time within ±1% of the final steady state condition in not more than 5 seconds when:

i) Running at full load (equal to rated output) of the generator and the maximum electrical step load is suddenly thrown off,

In the case when a step load equivalent to the rated output of a generator is thrown off, a transient frequency variation in excess of 10% of the rated frequency may be acceptable, provided the over speed protective device, fitted in addition to the governor, as required by Sect 4[4.2.10.3] below shall not activated.

ii) Running at no load and 50% of the full load of the generator is suddenly thrown on followed by the remaining 50% load after an interval sufficient to restore the frequency to steady state.

4.2.10.1(b) Power Management System. Where the electrical power system is fitted with a power management system and sequential starting arrangements, the application of loads in multiple steps of less than 50% of rated load in [4.2.10.1]a) ii) above may be permitted, provided it is in accordance with Chapter 6 Sect 4, Fig 6.4.1 The details of the power management system and sequential starting arrangements shall be submitted and its satisfactory operation shall be demonstrated to the Surveyor.

FIGURE 6.4.1

Limiting Curves for Loading 4-stroke Diesel Engines Step by Step from No-load to Rated Power as Function of the Brake Mean Effective Pressure

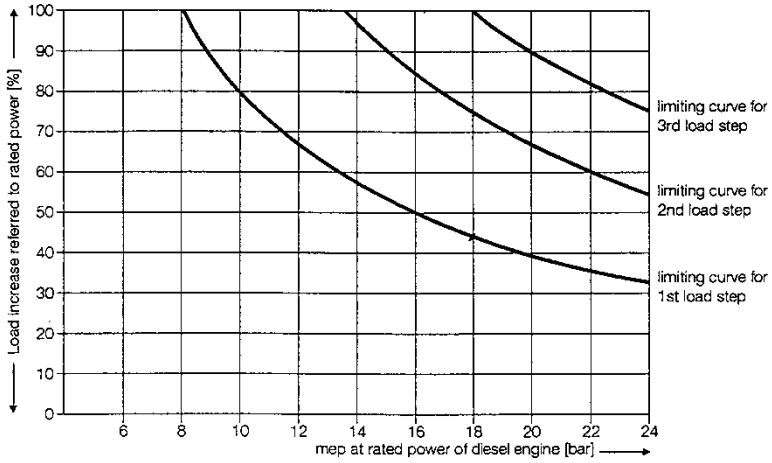

4.2.10.1(c) Frequency Variations in Steady State. The permanent frequency variation shall be within ±5% of the rated frequency at all loads between no load and full load.

4.4.2.10.1(d) Emergency Generator Prime Movers For prime movers driving emergency generators, the *requirements* of Sect [4.2.10.1]a)i) and Sect [4.2.10.1]c) above shall be met even when:

4.2.10.1.1 Their total consumer load is applied suddenly, or

4.2.10.1.2 Their total consumer load is applied in steps, subject to:

4.2.10.2 The power distribution system is designed such that the declared maximum step loading is not exceeded.

4.2.10.3 Over speed Governor

In addition to the normal operating governor, each auxiliary diesel engine having a maximum continuous output of 220 kW and over shall be fitted with a separate over speed device so adjusted that the speed cannot exceed the maximum rated speed by more than 15%. Provision shall be made for hand tripping. Refer Part 5B-6-4/4.2.8 for pressure-lubricated machines.

4.2.11 Alternating-current (AC) Generators

4.2.11.1 Control and Excitation of Generators

Excitation current for generators shall be provided by attached rotating exciters or by static exciters deriving their source of power from the machine being excited.

4.2.11.2 Voltage Regulation

4.2.11.2(a) Voltage Regulators. A separate regulator shall be supplied for each AC generator. When it is intended that two or more generators will be operated in parallel, reactive-droop compensating means shall be provided to divide the reactive power properly between the generators.

4.2.11.2(b) Variation from Rated Voltage – Steady Conditions. Each AC generator for ship's service driven by its prime mover having governor characteristics complying with Part 6-4-1/[1.6.3.2] shall be provided with an excitation system capable of maintaining the voltage under steady conditions within 2.5% of the rated voltage for all loads between zero and rated load at rated power factor. These limits may be increased to ±3.5% for emergency sets.

4.2.11.2(c) Variation from Rated Voltage – Transient Conditions. Momentary voltage variations shall be within the range of minus 15% to plus 20% of the rated voltage, and the voltage shall be restored to within ± 3% of the rated voltage in not more than 1.5 seconds when:

- A load equal to the starting current of the largest motor or a group of motors, but in any case, at least 60% of the rated current of the generator, and power factor of 0.4 lagging or less, is suddenly thrown on with the generator running at no load; and
- A load equal to the above is suddenly thrown off.

Consideration can be given to performing the test required by Chapter 6 Sect 4, Table 6.4.1 according to precise information concerning the maximum values of the sudden loads instead of the values indicated above, provided precise information is available. The precise information concerning the maximum values of the sudden loads shall be based on the power management system arrangements and starting arrangements provided for the electrical system.

4.2.11.2(d) Short Circuit Conditions. Short-circuit capabilities of generators are to be in accordance with IEC Publication 60034-1.Under steady-state short-circuit conditions, the generator together with its excitation system shall be capable of maintaining a steady-state short-circuit current of not less than three times its rated full load current for a period of two seconds or of such magnitude and duration as required to properly actuate the associated electrical protective devices.

4.2.11.3 Parallel Operation

For AC generating sets operating in parallel, the following requirements shall be complied with. Refer also Chapter 6 Sect 2[2.5.3.2] for protection of AC generators in parallel operation.

4.2.11.3(a) Reactive Load Sharing. The reactive loads of the individual generating sets are not to differ from their proportionate share of the combined reactive load by more than 10% of the rated reactive output of the largest generator, or 25% of the rated reactive output of the smallest generator, whichever is the less.

4.2.11.3(b)KW Load Sharing. For any load between 20% and 100% of the sum of the rated output (aggregate output) of all generators, the load on any generator shall not to differ more than ±15% of the rated output in kilowatt of the largest generator or 25% of the rated output in kilowatt of the individual generator , whichever is the less, from its proportionate share of the combined load for any steady state condition. The starting point for the determination of the foregoing load- distribution requirements shall be at 75% of the aggregate output with each generator carrying its proportionate share.

4.2.11.3(c) Facilities for Load Adjustment. Facilities shall be provided to adjust the governor sufficiently fine to permit an adjustment of load not exceeding 5% of the aggregate output at normal frequency.

4.2.12 **Direct-current (DC) Generators**

4.2.12.1 Control and Excitation of Generators

4.2.12.1(a) Field Regulations. Means shall be provided at the switchboard to enable the voltage of each generator to be adjusted separately. This equipment shall be capable of adjusting the voltage of the DC generator to within 0.5% of the rated voltage at all loads between no-load and full-load.

4.2.12.1(b) Polarity of Series Windings. The series windings of each generator for a two wire DC system shall be connected to the negative terminal of each machine.

4.2.12.1(c) Equalizer Connections. Refer Chapter 6 Sect 4[4.4.8.3]

4.2.12.2 Voltage Regulation

4.2.12.2(a) Shunt or Stabilized Shunt-wound Generator. When the voltage has been set at full-load to its rated value, the removal of the load shall not to cause a permanent increase of the voltage greater than 15% of the rated voltage. When the voltage has been set either at full-load or at no- load, the voltage obtained at any value of the load shall not to exceed the no-load voltage.

4.2.12.2(b) Compound-wound Generator. Compound-wound generators shall be so designed in relation to the governing characteristics of the prime mover that with the generator at full-load operating temperature and starting at 20% load with voltage within 1% of rated voltage, it gives at full-load a voltage within 1.5% of rated voltage. The average of ascending and descending voltage regulation curves between 20% load and full-load shall not to vary more than 3% from rated voltage.

4.2.12.2(c) Automatic Voltage Regulators. Ship's service generators which are of a shunt type are to be provided with automatic voltage regulators. However, if the load fluctuation does not interfere with the operation of essential auxiliaries, shunt-wound generators without voltage regulators or stabilized shunt-wound machines may be used. An automatic voltage regulator will not be required for the ship's service generators of an approximately flat-compounded type. Automatic voltage regulators shall be provided for all service generators driven by variable speed engines used also for propulsion purposes, whether these generators are of the shunt, stabilized shunt or compound- wound type.

4.2.12.3 Parallel Operation

For DC generating sets operating in parallel, the following requirements shall be complied with. Refer also Chapter 6 Sect 2[2.5.4.2] IEC Publications 60092-201,60092-202 and 60092-301 for protection of DC generators in parallel operation.

4.2.12.3(a) Stability. The generating sets shall be stable in operation at all loads from no-load to full-load.

4.2.12.3(b) Load Sharing. For any load between 20% and 100% of the sum of the rated output (aggregate output) of all generators, the load on any generator shall not to differ more than 12% from the rated output in kilowatts of the largest generator or 25% from the rated output in kilowatts of the individual generator in question, whichever is the less, from its proportionate share of the combined load for any steady state condition. The starting point for the determination of the foregoing load-distribution requirements shall be at 75% of the aggregate output with each generator carrying its proportionate share.

4.2.12.3(c) Tripping of Circuit Breaker. DC generators which operate in parallel shall be provided with a switch which will trip the generator circuit breaker upon functioning of the over speed device.

4.3 Accumulator Batteries

4.3.1 General

4.3.1.1 Application

All accumulator batteries for engine starting, essential or emergency services shall be constructed and installed in accordance with the following requirements. Accumulator batteries for services other than the above shall be constructed and equipped in accordance with good commercial practice. All accumulator batteries will be accepted subject to a satisfactory performance test conducted after installation to the satisfaction of the Surveyor.

4.3.1.2 Sealed Type Batteries

Where arrangements are made for releasing gas through a relief valve following an overcharge condition, calculations demonstrating compliance with the criteria in Chapter 6 Sect 3[3.2.4.3] under the expected rate of hydrogen generation shall be submitted together with the details of installation and mechanical ventilation arrangements.

4.3.1.3 References

4.3.1.3(a) Emergency Services. For requirements covering emergency services and transitional source of power, Refer Chapter 6 Sect 2[2.3.3.3] and Ch 6 Sect 2[2.3.4]

4.3.1.3(b) Protection of Batteries. For requirements covering protection of batteries, Refer Chapter 6 Sect 2[2.3.5]

4.3.1.3(c) Battery Installation. For requirements covering battery installation, ventilation of the battery location and protection from corrosion, Refer Chapter 6 Sect 3[3.2.4]

4.3.1.3(d) Cable Installation. For requirements covering cable installation in the battery room, Refer . Chapter 6 Sect 3[3.2.4]

4.3.2 Construction and Assembly

4.3.2.1 Cells and Filling Plugs

Battery cells are to be so constructed as to prevent spillage of electrolyte due to motions of the vessel at sea. Batteries are to be secured to their trays or shelves to prevent their movement

4.3.2.2 Crates and Trays

The cells shall be grouped in crates or trays of rigid construction equipped with handles to facilitate handling. For protection from corrosion, Refer Chapter 6 Sect 3[3.7.4]The mass of crates or trays are not to exceed 100 kg (220.5 lb).

4.3.2.3 Nameplate

Nameplates of corrosion-resistant material shall be provided in an accessible position of each crate or tray and are to indicate at least the following information

a. The manufacturer's name;
b. The type designation;
c. The rated voltage;
d. The ampere-hour rating at a specific rate of discharge.
e. The specific gravity of the electrolyte (in the case of a lead-acid battery, the specific gravity when the battery is fully charged).

4.3.3 Engine-starting Battery

Battery systems for engine-starting purposes may be of the one-wire type and the earth lead shall be carried to the engine frame. Refer also Chapter 2 Sect1[1.7.5] and Chapter 6 Sect 2[2.3.8] for main engine starting and the starting arrangement of the emergency generator, respectively.

4.4 Switchboards, Distribution Boards, Controllers, etc.

4.4.1 General

4.4.1.1 Applications

Switchboards are to provide adequate control of the generation and distribution of electric power. The following equipment shall be constructed and tested in accordance with the following requirements to the satisfaction of the Surveyor.

4.4.1.1(a) Switchboards. Switchboards for essential services or for services indicated in Chapter 6 Sect 4 Table 6.4.11

4.4.1.1(b) Motor Controllers. Motor Controllers of 100 kW and over intended for essential services or for services indicated in. Chapter 6 Sect 4 Table 6.4.11

4.4.1.1(c) Motor Control Centers. Motor control centers with aggregate loads of 100 kW or more intended for essential services or for services indicated in.Chapter 6 Sect 4 Table 6.4 11

4.4.1.1(d) Battery Charger Units and Uninterruptible Power System (UPS) Units. Battery charger units of 25 kW and over and uninterruptible power system (UPS) units of 50 kVA intended for essential services, services indicated in Chapter 6 Sect 4 Table 6.4.11, emergency source of power or transitional source of power.

4.4.1.1(e) Distribution Boards. Distribution boards associated with the charging or discharging of the battery system or uninterruptible power system (UPS) in Sect 4 [4.4.1.1] (d) above

Switchboard, distribution board, battery charger units, uninterruptible power system (UPS) units, motor control centers and motor controllers not covered by the above paragraph shall be constructed and equipped in accordance with good commercial practice, and will be accepted subject to a satisfactory performance test conducted after installation to the satisfaction of the Surveyor.

4.4.1.2 References

4.4.1.2(a) Inclination. For requirements covering inclination for design condition, Refer Chapter 1 Sect 1[1.9]

4.4.1.2(b) Emergency Switchboard. For requirements covering emergency switchboard, Refer Chapter 6 Sect 3[3.3.6]

4.4.1.2(c) Circuit Breakers. For requirements covering generator circuit breakers, Refer Chapter 6 Sect 4[4.7.1]

4.4.1.2(d) Feeder Protection. For requirements covering feeder protection, Refer Chapter 6 Sect 2[2.5.2] to [2.6.2], Chapter 6 Sect 2[2.7.1.3], and Chapter 6 Sect 2[2.7.2.4]

4.4.1.2(e) Hull Return and Earthed Distribution System. For requirements covering hull return system and earthed distribution system, Refer Chapter 6 Sect 2[2.4.2] Chapter 6 Sect 2[2.4.3]

4.4.1.2(f) Earthing. For requirements covering earthing connections, Refer Chapter 6 Sect 3[3.4]

4.4.1.2(g) Installation. For requirements covering installation, Refer Chapter 6 Sect 3[3.2.5] for switchboard,Chapter 6 Sect 3[3.2.6]for distribution boards Chapter 6 Sect 3[3.2.7] for motor controllers and control centres

4.4.1.2(h) Protection Enclosures and its Selection. For requirements covering degree of the protection and the selection of equipment, Refer Chapter 6 Sect 1[1.9].and Chapter 6 Sect 3[3.2.1]

4.4.2 Testing and Inspection

4.4.2.1 Applications

4.4.2.1(a) Switchboards - All switchboards intended for essential services or for services indicated Chapter 6 Sect 4Table 6.4.11., shall be tested in the presence of and inspected by the Surveyor, preferably at the plant of the manufacturer. For other switchboards, the tests may be carried out by the manufacturer whose certificate of tests will be acceptable and shall be submitted upon request from INTLREG.

4.4.2.1(b) Motor Controllers . All motor controllers of 100 kW and over intended for essential services or for services indicated in Chapter 6 Sect 4Table 6.4.11., shall be tested in the presence of and inspected by the Surveyor, preferably at the plant of the manufacturer. For other motor controllers, the tests may be carried out by the manufacturer whose certificate of tests will be acceptable and shall be submitted upon request from INTLREG.

4.4.2.1(c) Motor Control Centers - All motor control centers with aggregate loads of 100 kW and over intended for essential services or for services indicated in Chapter 6 Sect 4Table 6.4.11 shall be tested in the presence of and inspected by the Surveyor, preferably at the plant of the manufacturer. For other motor control centers, the tests may be carried out by the manufacturer whose certificate of tests will be acceptable and shall be submitted upon request from INTLREG.

4.4.2.1(d) Battery Charger Units, Uninterruptible Power System (UPS) Units, and Distribution Boards - Battery charger units of 25 kW and over, uninterruptible power system (UPS) units of 50 kW and over, and distribution boards [associated with the charging or discharging of the battery system or uninterruptible power system (UPS)] are used for essential services (Refer Chapter 6 Sect 1[1.2.4]services indicated in Table 6.4.11 ,

emergency source of power .Refer Chapter 6 Sect 2[2.3] and transitional source of power Refer Chapter 6 Sect 2[2.3.4] shall be tested in the presence of and inspected by the Surveyor, preferably at the plant of the manufacturer. For all other battery charger units, uninterruptible power system (UPS) units, and distribution boards, the tests may be carried out by the manufacturer whose certificate of tests will be acceptable and shall be submitted upon request from INTLREG.

4.4.2.1(e) Test Items. Tests shall be carried out in accordance with the requirements in Chapter 6 Sect 4 Table 6.4.5

4.4.2.2 Special Testing Arrangements

In cases where all of the required tests are not carried out at the plant of the manufacturer, the Surveyor shall be notified and arrangements shall be made so that the remaining tests may be witnessed.

4.4.3 Insulation Resistance Measurement

The insulation resistance between current-carrying parts (connected together for the purpose of this test) and earth and between current-carrying parts of opposite polarity shall be measured at a DC voltage of not less than 500 volts before and after the dielectric strength tests. The insulation resistance measurement after the dielectric strength tests shall be carried out before components which have been disconnected for the dielectric tests are reconnected, and the insulation resistance shall not to be less than 1 meg ohm.

4.4.4 Dielectric Strength of Insulation

The dielectric strength of the insulation shall be tested for 60 seconds by an alternating voltage applied in accordance with Chapter 6 Sect 4 Table 6.4.5 between:

i) All live parts and the interconnected, exposed conductive parts, and

ii) Each phase and all other phases connected for this test to the interconnected exposed conductive parts of the unit.

The test voltage at the moment of application shall not to exceed 50% of the values given in Chapter 6 Sect 4 Table 6.4.5. It shall be increased steadily within a few seconds to the required test voltage and maintained for 60 seconds. Test voltage is to have a sinusoidal waveform and a frequency between 45 Hz and 60 Hz.

4.4.4.1 Production-line Apparatus

Standard apparatus produced in large quantities for which the standard test voltage is 2500 volts or less may be tested for one second with a test voltage 20% higher than the one-minute test voltage.

4.4.4.2 Devices with Low Insulation Strength

Certain devices such as potential transformers having inherently lower insulation strength are to be disconnected during the test.

4.4.5 Construction and Assembly

4.4.5.1 Enclosures and Assemblies

Enclosures and assemblies shall be constructed of steel or other suitable, incombustible, moisture-resistant materials and reinforced as necessary to withstand the mechanical, electrical (magnetic) and thermal stresses likely to be encountered in service, and shall be protected against corrosion. No wood shall be used, except for hardwood for non conducting hand rails. Insulating materials shall be flame retardant

and moisture resistant. The supporting framework shall be of rigid construction.

4.4.5.2 Dead Front

The dead-front type shall be used. Live-front type shall not acceptable, regardless of the voltage ratings

4.4.5.3 Mechanical Strength

All levers, handles, hand wheels, interlocks and their connecting links, shafts and bearings for the operation of switches and contactors shall be of such proportions that they will not be broken or distorted by manual operation.

4.4.5.4 Mechanical Protection

The sides and the rear and, where necessary, the front of switchboards shall be suitably guarded. Exposed live parts having voltages to earth exceeding a voltage of 55 volts DC or 55 volts AC rms between conductors are not to be installed on the front of such switchboards. Unless the switchboard is installed on an electrically insulated floor, non-conducting mats or gratings shall be provided at the front and rear of the switchboard. Where the floor on which the switchboard is installed is of electrically insulated construction, the insulation level of the floor to the earth shall be at least 50 M.ohm. A notice plate shall be posted at the entrance to the switchboard room or on the switchboard front panel to state that the floor in the room is of electrically insulated construction. Drip covers shall be provided over switchboards when subject to damage by leaks or falling objects.

4.4.6 Bus Bars, Wiring and Contacts

4.4.6.1 Design

Busbars and other conductors shall normally be made of copper or copper covered aluminum. Copper coated aluminum or pure aluminum bus bar shall be adequately protected against corrosion by placing in an air conditioned environment, by special coating sealing of the aluminum or by the aluminum itself being seawater resistant.

All connections are to be so made as to inhibit corrosion.

Busbars are to be dimensioned in accordance with IEC Publication 60092-302.The mean temperature rise of busbars is not to exceed 45°C(113°F) under rated current condition with an ambient air temperature of 45°C (113°F) and is not to have any harmful effect on adjacent components. Higher values of temperature rise may be accepted to the satisfaction of the INTLREG

4.4.6.2 Short Circuit Rating

Circuit breakers and bus bars shall be mounted, braced and located so as to withstand the thermal effects and mechanical forces resulting from the maximum prospective short circuit current. Switchboard instruments, controls, etc. shall be located with respect to circuit breakers so as to minimize the thermal effects due to short circuit currents.

4.4.6.3 Internal Wiring

Instrument and control wiring shall be of the stranded type and is to have heat-resisting and flame- retarding insulation. Wiring from hinged panels shall be of the extra-flexible type.

4.4.6.4 Arrangement

4.4.6.5(a) Accessibility. The arrangement of bus bars and wiring on the back shall be such that all lugs are readily accessible.

4.4.6.5(b) Locking of Connections . All nuts and connections shall be fitted with locking devices to prevent loosening due to vibration. Bolted bus bar connections shall be suitably treated (e.g., silver plating) to avoid deterioration of electrical conductivity over time.

4.4.6.5(c) Soldered Connections. Soldered connections are not to be used for connecting or terminating any wire or cable of nominal cross-sectional area of greater than 2.5 mm^2 (4,933 circ. mils). Soldered connections, where used, are to have a solder contact length at least 1.5 times the diameter of the conductor.

Horizontally installed busbars and bare conductors or connections shall be protected by screens, if they are placed such that there could be a risk of anything falling down on them (e.g. tools, fuses or other objects

4.4.6.5 Clearances and Creepage Distances

4.4.6.6(a) General. Bare main bus bars, but not including the conductors between the main bus bars and the supply side of outgoing units, are to have minimum clearances (in air) and creepage distances (across surfaces) in accordance with Chapter 6 Sect 4 Table 6.4.6

4.4.6.6(b) Alternative - Alternatively, reduced creepage and clearance distances may be used provided:

i) The equipment shall not installed in 'Machinery Spaces of Category A' or in areas affected by a Local Fixed Pressure Water-spraying or Local Water-mist Fire Extinguishing System.

ii) The minimum clearance distance shall not be less than 8 mm

iii) The minimum creepage distance shall not be less than 16 mm.

iv) The equipment complies with IEC 61439-1.

v) In applying IEC 61439-1, the equipment is considered to be:

- Of overvoltage Category III,
- Installed in an environment of pollution degree 3,
- Having insulating material of type IIIa, and
- Installed in inhomogeneous field conditions

vi) The temperature dependent criteria in IEC 61439-1 are derated to meet the ambient temperatures found on marine installations. Refer Chapter 1 Sect 1 /Table 1.1.2

vii) The equipment is subject to an impulse voltage test with test voltage values shown in the Table below. Where intermediate values of rated operational voltage are used, the next higher rated impulse withstand test voltage shall be used. The impulse voltage test reports shall be submitted to INTLREG for review.

Rated Operational Voltage V	*Rated Impulse Withstand Test Voltage kV*
50	0.8
100	1.5
150	2.5
300	4
600	6
1000	8

4.4.6.6 Terminals

Terminals or terminal rows for systems of different voltages shall be clearly separated from each other. The rated voltage shall be clearly indicated at least once for each group of terminals which have been separated from the terminals with other voltage ratings. Terminals with different voltage ratings, each not exceeding 50 V DC or 50 V AC may be grouped together. Each terminal is to have a nameplate indicating the circuit designation.

4.4.7 Control and Protective Devices

4.4.7.1 Circuit-disconnecting Devices

4.4.7.1(a) Systems Exceeding 50 Volts. Distribution boards, chargers or controllers for distribution to motors, appliances, and lighting or other branch circuits shall be fitted with multipole circuit breakers or a multipole switch-fuse combination in each unearthed conductor.

4.4.7.1(b) System of 50 Volts and Less . For distribution boards, chargers or controllers where voltage to earth or between poles does not exceed 50 volts DC or 50 volts AC rms, the fuses may be provided without switches.

4.4.7.1(c) Disconnect Device. The rating of the disconnecting device shall be coordinated with the voltage and current requirements of the load. The disconnect device is to indicate by position of the handle, or otherwise, whether it is open or closed.

4.4.7.2 Arrangement of Equipment

4.4.7.2(a) Air Circuit Breakers. Air circuit breaker contacts shall be kept at least 305 mm (12 in.) from the vessel's structure unless insulation barriers are installed.

4.4.7.2(b) Voltage Regulators. Voltage regulator elements shall be provided with enclosing cases to protect them from damage.

4.4.7.2(c) Equipment Operated in High Temperature. Where rheostats or other devices that may operate at high temperatures are mounted on the switchboard, they shall be naturally ventilated and so located or isolated by barriers as to prevent excessive temperature of adjacent devices. When this cannot be accomplished, the rheostat or other device shall be mounted separately from the switchboard.

4.4.7.2(d) Accessibility to Fuses. All fuses, except for instrument and control circuits, shall be mounted on or be accessible from the front of the switchboard.

4.4.7.2(e) Protective Device for Instrumentation. All wiring on the boards for instrumentation s4hall be protected by fuses or current limiting devices. Refer Chapter 6 Sect 2(2.5.9)

4.4.7.2(f) Wearing Parts. All wearing parts shall be accessible for inspection and readily renewable.

4.4.7.3 Markings

Identification plates shall be provided for each piece of apparatus to indicate clearly its service. Identification plates for feeders and branch circuits are to include the circuit designation and the rating of the fuse or circuit-breaker trip setting required by the circuit.

4.4.8 Switchboards

In addition to Chapter 6 Sect 4[4.4.1] to Sect 4 [4.4.7], as applicable, the switchboards for essential or emergency services are to comply with the following requirements.

4.4.8.1 Handrails

Insulated handrail or insulated handles shall be provided on the front of the switchboard. Similarly, where access to the rear is required, insulated handrail or insulated handles are also to be fitted on the rear of the switchboard.

4.4.8.2 Main Bus Bar Subdivision

Vessels with the keel laid or in similar stage of construction on or after 1 July 1998 are to meet the following requirements. Where the main source of electrical power is necessary for propulsion of the vessel, the main bus bar shall be subdivided into at least two sections which shall be normally connected by circuit breaker or other approved means. As far as practicable, the connection of generating sets and any other duplicated equipment shall be equally divided between the sections.

If the arrangement is such that the main switchboard is divided into separate sections which are interconnected by cable, the cable shall be protected at each end against faults.

4.4.8.3 Equalizer Circuit for Direct-current (DC) Generators

4.4.8.3(a) Equalizer Main Circuit. The current rating of the equalizer main circuit for direct-current (DC) generators shall not to be less than half of the rated full-load current of the generator.

4.4.8.3(b) Equalizer Bus Bars. The current rating of the equalizer bus bars shall not to be less than half of the rated full-load current of the largest generator in the group.

4.4.8.4 Equipment and Instrumentation

Equipment and instrumentation shall be provided in accordance with Part 5B-6-4/Table 6.4.7. They shall be suitable for starting, stopping, synchronizing and paralleling each generator set from the main switchboard. They may be mounted on the centralized control console, if the main switchboard is located in the centralized control station.

4.4.9 Motor Controllers and Control Centers

In addition to Part 6-3-7, as applicable, the motor controllers and control centers for essential or emergency services are to comply with the following requirements.

4.4.9.1 Enclosures and Assemblies

The following materials are acceptable for the enclosures:

- Cast metal, other than die-cast metal, at least 3 mm ($^1/_8$ in.) thick at every point.
- Nonmetallic materials which have ample strength, are noncombustible and non-

absorptive (e.g., laminated phenolic material).

- Sheet metal of adequate strength.

Motor control centers shall be constructed so that they are secured to a solid foundation, be self- supported, or be braced to the bulkhead

4.4.9.2 Disconnect Switches and Circuit Breaker

Means shall be provided for the disconnection of the full load from all live poles of supply of every motor rated at 0.5 kW or above and its control gear. Where the control gear is mounted on or adjacent to a main or auxiliary distribution switchboard, a disconnecting switch in the switchboard may be used for this purpose. Otherwise, a disconnecting switch within the control gear enclosure or a separate enclosed disconnecting switch shall be provided. Disconnect switches and circuit breakers shall be operated without opening the enclosures in which they are installed.

4.4.9.3 Auto-starters

Alternating-current (AC) motor manual auto-starters with self-contained auto-transformers shall be provided with switches of the quick-make-and-break type, and the starter shall be arranged so that it will be impossible to throw to the running position without having first thrown to the starting position. Switches shall be preferably of the contactor or air-break-type.

4.4.10 Battery Systems and Uninterruptible Power Systems (UPS)

In addition to, Chapter 6 Sect 4[4.4.1] to Sect 4 [4.4.7], as applicable, equipment for essential, emergency, and transitional sources of power services are to comply with the following requirements. Such equipment would include the battery charger unit, uninterruptible power system (UPS) unit, and the distribution boards associated with the charging or discharging of the battery system or uninterruptible power system (UPS).

4.4.10.1 Definitions

Uninterruptible Power System (UPS) – A combination of converters, switches and energy storage means, for example batteries, constituting a power system for maintaining continuity of load power in case of input power failure.(IEC 62040:1999)

Off-line UPS unit – A UPS unit where under normal operation the output load is powered from the bypass line (mains) and only transferred to the inverter if the bypass supply fails or goes outside preset limits. This transition will invariably result in a brief (typically 2 to 10 milli-seconds) break in the load supply.

Line interactive UPS unit – An off-line UPS unit where the bypass line switch to stored energy power when the input power goes outside the preset voltage and frequency limits.

On-line UPS unit – A UPS unit where under normal operation the output load is powered from the inverter, and will therefore continue to operate without break in the event of the supply input failing or going outside preset limits.

DC UPS unit – A UPS unit where the output is in DC (direct current).

4.4.10.2 Battery Charging Rate

Except when a different charging rate is necessary and is specified for a particular application, the charging facilities shall be such that the completely discharged battery can be recharged to 80% capacity in not more than 10 hours, without

exceeding the maximum permissible charging current. A charging rate other than the above (e.g. fully charged within 6 hours for batteries for starting of motors) may be required in relation to the use of the battery Refer also Chapter 6,Sect 4[4.4.10.6]c

4.4.10.3 Discharge Protection

An acceptable means, such as reverse current protection, shall be provided for preventing a failed component in the battery charger unit or uninterruptible power system (UPS) unit from discharging the battery.

4.4.10.4 Design and Construction

4.4.10.4(a) Construction. Battery charger units and uninterruptible power system (UPS) units are to be constructed in accordance with the IEC 62040 Series, or an acceptable and relevant national or international standard.

4.4.10.4(b) Operation. The operation of the UPS shall not to depend upon external services.

4.4.10.4(c) Type. The type of UPS unit employed, whether off-line, line interactive or on-line, shall be appropriate to the power supply requirements of the connected load equipment.

4.4.10.4(d) Continuity of Supply. An external bypass shall be provided to account for a failure within the uninterruptible power system (UPS). For battery charger units and DC UPS units, Refer Chapter 6 Sect 2[2.4.1.6) c)

4.4.10.4(e) Monitoring and Alarming. The battery charger unit or uninterruptible power system (UPS) unit shall be monitored and audible and visual alarm shall be given in a normally attended location for the following.

- Power supply failure (voltage and frequency) to the connected load
- Earth fault,
- Operation of battery protective device,
- When the battery is being discharged, and
- When the bypass is in operation for on-line UPS units. When changeover occurs, for battery charger units and DC UPS units required to comply with Chapter 6 Sect 2[2.4.1.6) c)

4.4.10.5 Location

4.4.10.5(a) Location. The UPS unit shall be suitably located for use in an emergency. The UPS unit shall be located as near as practical to the equipment being supplied, provided the arrangements comply with all other Rules, such as for location of electrical equipment Refer Chapter 6Sect 3[3.2.4] to Sect 3[3.2.7]

4.4.10.5(b) Ventilation. UPS units utilizing valve regulated sealed batteries may be located in compartments with normal electrical equipment, provided the ventilation arrangements are in accordance with the requirements of Chapter 6 Sect 3[3.2.4] Since valve regulated sealed batteries are considered low-hydrogen-emission batteries, calculations shall be submitted in accordance with Chapter 6 Sect 3[3.2.4.2)d) to establish the gas emission performance of the valve regulated batteries compared to the standard lead acid batteries. Arrangements shall be provided to allow any possible gas emission to be led to the weather, unless the gas emission performance of the valve regulated batteries does not exceed that of standard lead acid batteries

connected to a charging device of 0.2 kW.

4.4.10.5(c) Battery Installation. For battery installation arrangements, Refer Chapter 6Sect 3[3.2.4]

4.4.10.6 Performance

4.4.10.6(a) Duration. The output power shall be maintained for the duration required for the connected equipment as stated in Chapter 6 Sect 2[2.3.2] and Sect 2[2.3.4] for emergency services and of transitional source of power, as applicable.

4.4.10.6(b) Battery Capacity. No additional circuits shall be connected to the battery charger unit or UPS unit without verification that the batteries have adequate capacity. The battery capacity is, at all times, to be capable of supplying the designated loads for the time specified in Sect 4[4.4.10.6] a) above

4.4.10.6(c) Recharging. On restoration of the input power, the rating of the charging facilities shall be sufficient to recharge the batteries while maintaining the output supply to the load equipment. Refer also Chapter 6 Sect 4[4.4.10.2]

4.4.10.7 Testing and Survey

4.4.10.7(a) Surveys. Equipment units shall be surveyed during manufacturing and testing in accordance with Chapter 6 Sect 4[4.4.2]

4.4.10.7(b) Testing. Appropriate testing shall be carried out to demonstrate that the battery charger units and uninterruptible power system (UPS) units are suitable for the intended environment. This is expected to include as a minimum the following tests:

- Functionality, including operation of alarms;
- Temperature rise;
- Ventilation rate;
- Battery capacity

4.4.10.7(c) Test upon power input failure. Where the supply shall be maintained without a break following a power input failure, this shall be verified after installation by practical test.

4.5 Transformers

4.5.1 General

4.5.1.1 Applications

All transformers which serve for essential or emergency electrical supply shall be constructed, tested and installed in accordance with the following requirements. Transformers other than the above services, auto-transformers for starting motors or isolation transformers shall be constructed and equipped in accordance with good commercial practice. All transformers shall be of the dry and air cooled type. The use of liquid immersed type transformers will be subject to special consideration. Transformers other than for essential or emergency services will be accepted subject to a satisfactory performance test conducted after installation to the satisfaction of the Surveyor.

4.5.1.2 References

4.5.1.2(a) Power Supply Arrangement. For requirements covering arrangement of power supply through transformers to ship's service systems, Refer Chapter 6 Sect 2[2.4.1.6]

4.5.1.2(b) Protection. For requirements covering protection of transformers, Refer Chapter 6 Sect 2[2.5.8]

4.5.1.2(c) Protection Enclosures and its Selection. For requirements covering selection of the protection enclosures for location conditions, Refer. Chapter 6 Sect 3[3.2.1.1]

4.5.1.3 Forced Cooling Arrangement (Air or Liquid)

Where forced cooling medium is used to preclude the transformer from exceeding temperatures outside of its rated range, monitoring and alarm means shall be provided and arranged so that an alarm activates when pre-set temperature conditions are exceeded. Manual or automatic arrangements shall be made to reduce the transformer load to a level corresponding to the cooling available.

4.5.2 Temperature Rise

The maximum temperature rise of the transformer insulated windings, based on an ambient temperature of 45°C (113°F), shall not to exceed the values listed in Chapter 6 Sect 4 /Table 6.4.8

4.5.3 Construction and Assembly

4.5.3.1 Windings

All transformer windings shall be treated to resist moisture, sea atmosphere and oil vapors.

4.5.3.2 Terminals

Terminals shall be provided in an accessible position. The circuit designation shall be clearly marked on each terminal connection. The terminals shall be so spaced or shielded that they cannot be accidentally earthed, short-circuited or touched.

4.5.3.3 Nameplate

Nameplates of corrosion-resistant material shall be provided in an accessible position of the transformer and are to indicate at least the information as listed Chapter 6 Sect 4/Table 6.4.4.c

4.5.3.4 Prevention of the Accumulation of Moisture

Transformers of 10 kVA/phase and over shall be provided with effective means to prevent accumulation of moisture and condensation within the transformer enclosure where the transformer is disconnected from the switchboard during standby (cold standby). Where it is arranged that the transformer is retained in an energized condition throughout a period of standby (hot standby), the exciting current to the primary winding may be considered as a means to meet the above purpose. In case of hot standby, a warning plate shall be posted at or near the disconnecting device for the primary side feeder to the transformer.

4.5.4 Testing

For single-phase transformers rated 1 kVA and above or three-phase transformers rated 5 kVA and above intended for essential or emergency services, the following tests shall be carried out by the transformer's manufacturer in accordance with a recognized standard

whose certificate of test shall be submitted for review upon request.

i) Measurement of winding resistance, voltage ratio, impedance voltage, short circuit impedance, insulation resistance, load loss, no load loss and excitation current, phase relation and polarity.

ii) Dielectric strength.

iii) Temperature rise (required for one transformer of each size and type). Refer Chapter 6 Sect 4[4.5.2]

Three-phase transformers or three-phase bank transformers of 100 kVA and above are to be tested in the presence of the Surveyor. The test items are to be in accordance with the standard applicable to the transformer. In addition, the tests required in Part 6- Chapter 2-Sect 4 [4.1.1.9.] are also to be carried out in the presence of the Surveyor for each individual transformer. Transformers of less than 100 kVA will be accepted, subject to a satisfactory performance test conducted to the satisfaction of the Surveyor after installation

4.6 Semiconductor Converters for Adjustable Speed Motor Drives

4.6.1 Application

All semiconductor converters that are used to control motor drives having a rated power of 100 kW (135 hp) and over intended for essential services (Refer definition in Chapter 6 Sect 1[1.2.4] or for services indicated in Chapter 6 Sect 4/Table 6.4.11 shall be designed, constructed and tested in accordance with the requirements of Sect [4.6] above

Manufacturer's tests for semiconductor converters that are used to control motor drives having a rated power less than 100 kW (135 hp) for essential services (Refer definition in Chapter 6 Sect 1[1.2.4] or for services indicated in Chapter 6 Sect 4/Table 6.4.11 are to include at least the tests described in Chapter 6 Sect 4[4.6.4] All other semiconductor converters used to control motor drives shall be designed, constructed and tested in accordance with established industrial practices and manufacturer's specifications.

The required tests may be carried out at the manufacturer facility whose certificates of tests will be acceptable and shall be submitted upon request to INTLREG. All semiconductor converters will only be accepted subject to a satisfactory performance test conducted to the satisfaction of the attending Surveyor after installation.

4.6.2 Standards of Compliance

The design of semiconductor converters for adjustable speed motor drives, unless otherwise contradicted by INTLREG Rules, shall be in compliance with the requirements of IEC Publication 61800-5-1:2007 (titled 'Adjustable speed electrical power drive systems : Safety Requirements – Electrical, thermal and energy') and 60146-1-1:2009 (titled 'Semiconductor converters – General requirements and line commutated converters – Specification of basic requirements). For convenience, the following requirements are listed.

4.6.3 Design, Construction and Assembly Requirements

4.6.3.1 Rating

Semiconductor converters shall be rated for continuous load conditions and if required by the application, are to have specified overload capabilities.

The operation of the semiconductor converter equipment, including any associated transformers, reactors, capacitors and filter circuits, shall not cause harmonic distortion and voltage and frequency variations in excess of the values mentioned in Chapter 6 Sect 2[2.4.5] and Chapter 6 Sect 1,Table 6.1.1 respectively.

The semiconductor converter circuits shall be able to withstand voltage and current transients that the system may be subject to for certain applications.

The semiconductor converters shall be suitable for environmental conditions found in marine installations such as those mentioned in Chapter 1 Sect 1/Table 1.1.1 and Table 1.1.2

4.6.3.2 Enclosures

Enclosures and assemblies shall be constructed of steel or other suitable incombustible, moisture- resistant materials and reinforced as necessary to withstand the mechanical, electro-magnetic and thermal stresses which may be encountered under both normal and fault conditions.

Enclosures shall be of the closed type. The degree of protection of the enclosure shall be in accordance with Chapter 6 Sect 3 /Table 6.3.1. For HV converters, the enclosure is to satisfy the requirements in Chapter 6 Sect 5/Table 6.5.1

All wearing parts shall be accessible for inspection and be readily replaceable.

4.6.3.3 Nameplate Data

A nameplate made of corrosion resistant material shall be provided on the semiconductor assembly and is to indicate at least the following:

i) Manufacturer's name and identification reference/equipment serial number

ii) Number of input and output phases

iii) Rated input voltage and current

iv) Rated output voltage and current

v) Rated input and output frequency, if any

vi) Range of output frequency

vii) Maximum permissible prospective symmetrical rms short-circuit current of the power source

viii) Cooling methods

ix) Degree of protection

4.6.3.4 Warning Labels

Appropriate warning labels informing the user of the dangers with working with the different parts of the converter assembly shall be placed at all appropriate places of the assembly.

4.6.3.5 Hand Rails

Insulated handrails or insulated handles shall be provided for each front panel of the assembly. Where access to the rear is also required, insulated handrails or insulated handles shall be fitted to the rear of the assembly as well.

4.6.3.6 Accessibility

All components of the semiconductor converter assembly shall be mounted in such a manner that they can be removed from the assembly for repair or replacement without having to dismantle the complete unit.

4.6.3.7 Capacitor Discharge

Capacitors within a semiconductor converter assembly shall be discharged to a voltage less than 60 V, or to a residual charge less than 50 µC, within 5 seconds after the removal of power. If this requirement cannot be met, appropriate warning labels shall be placed on the assembly.

4.6.3.8 Cooling Arrangements

Design of cooling systems shall be based on an ambient air temperature of 45°C (113°F) indicated in Chapter 1 Sect 1[1.20] and Chapter 1 sect 1 /Table 1.1.2

Semiconductor converter assemblies shall be installed away from sources of radiant energy in locations where the circulation of air shall not restricted to and from the assembly and where the temperature of the inlet air to air-cooled converters will not exceed that for which the converter has been designed.

Where arrangements for forced cooling have been provided, the equipment is, unless otherwise specifically required, to be designed such that power cannot be applied to, or retained on, the semiconductor circuits, unless effective cooling is maintained. Other effective means of protection against equipment over-temperature such as reduction in the driven load may also be acceptable.

Semiconductor assemblies with forced cooling shall be provided with a means of monitoring the temperature of the cooling medium. Over-temperature of the cooling medium shall be alarmed locally and at a continuously manned location and the equipment shutdown when temperature exceeds the manufacturer specified value.

Semiconductor assemblies with liquid cooling shall be provided with a means to detect leakage. In case of leakage, an audible and visible alarm shall be initiated locally and remotely at a continuously manned location. Means to contain any leakage shall be provided so that the liquid does not cause a failure of the semiconductor assembly or any other electrical equipment located near the converter. The resistivity of the cooling liquid shall be monitored and an alarm given both locally and remotely in a continuously manned location if the resistivity exceeds the manufacturer specified value.

In case of failure of the cooling system, an alarm shall be given both locally and remotely at a continuously manned location and the output current shall be reduced automatically.

Cooling liquids shall be non-conductive and non-flammable.

4.6.3.9 Emergency Stop

When required, semiconductor converter assemblies shall be provided with an emergency stop function. The emergency stop circuit shall be hard-wired and independent of any control system signal.

4.6.3.10 Electrical Protection

4.6.3.10(a) Overvoltage Protection. Means shall be provided to prevent excessive overvoltage in a supply system to which semiconductor converters are connected and to prevent the application of voltages in excess of the rating of semiconductor devices.

4.6.3.10(b) Overcurrent Protection. Arrangements shall be made so that the permissible current of semiconductor converters or semiconductor devices associated with the semiconductor converter cannot be exceeded during operation.

4.6.3.10(c) Short Circuit Protection. Semiconductor converters and the associated semiconductor devices shall be protected against short circuit.

4.6.3.10(d) Filter Circuits. Filter circuits shall be protected against overvoltage, overcurrent and short circuit.

4.6.3.10(e) Alarms. Visual and audible alarms shall be provided at the control station in the event of operation of the protection system.

4.6.3.11 Clearance and Creepage Distances

Clearance and creepage distances used in standard production (COTS) semiconductor converter assemblies shall be in accordance with IEC 61800-5-1 and suitable for overvoltage category III, pollution degree 3 and insulating material group IIIa. The relevant values are reproduced in the Table below for convenience.

System Voltage (V)	*Minimum Clearance Distance (mm)*
≤50	0.8
100	0.8
150	1.5
300	3.0
600	5.5
1000	8.0
3600	25
7200	60
12000	90
15000	120

Note: Interpolation is permitted.

Working Voltage (rms) (V)	*Minimum Creepage Distance (mm)*
50	1.9
100	2.2
125	2.4
160	2.5
200	3.2
250	4.0
320	5.0
400	6.3

500	8.0
630	10.0
800	12.5
1000	16
1250	20
1600	25
2000	32
2500	40
3200	50
4000	63
5000	80
6300	100
8000	125
10000	160

Note: Interpolation is permitted.

4.6.3.12 Protection and Monitoring Requirements

Semiconductor assemblies, as a minimum, shall have alarm functions for the following parameters:

i) Overcurrent

ii) Overload

iii) Overvoltage

iv) Ground fault

v) Loss of cooling

vi) Increase in resistivity of cooling medium (for liquid cooled converters)

vii) Over-temperature

viii) Loss of communication to process control

ix) Loss of motor speed feedback

If harmonic filters are used in conjunction with semiconductor converter assemblies, refer to Chapter 6 Sect 2[2.5.10] for additional protection requirements.

For vessels with electric propulsion, refer to Part 6- Chapter 2-Sect 4[4.6]

4.6.3.13 Load-sharing

When semiconductor converters have multiple parallel/series circuits, load sharing between the multiple circuits shall be distributed uniformly, as far as practicable.

4.6.3.14 EMC Emission Requirements

If requested by the customer, EM immunity and EM emissions testing of the semiconductor assembly shall be done as an optional test in accordance with IEC

61800-3 (titled 'Adjustable speed electrical power drive systems – Part 3: EMC requirements and specific test methods').

Note: Radiated and conducted emissions/immunity does not depend on the equipment alone but also on the interaction between the semiconductor converter assembly and the rest of the power system. There shall be communication between the manufacturer and the customer as to what installation guidelines may need to be followed to satisfy the different EM emission/immunity requirements, such as cable routing, types of interconnect cables used, cable shielding, etc.

4.6.3.15 Harmonic Filter Requirements

If harmonic filter circuits are used in association with semiconductor converter assemblies to reduce the harmonics and transients in the system, they are to comply with the requirements in Chapter 6 Sect 2[2.5.10]

4.6.3.16 Performance

The converter control system shall be able to control the motor by speed ramp, torque or power, as per customer specification.

Upon loss of the reference signal, the converter shall either decelerate the driven motor to minimum speed/torque/power or down to standstill as per customer specification for the required application.

When, during normal operation, the motor is decelerated to standstill, it shall be possible to de-energize the motor by blocking the control signals to the power semiconductors, while leaving the converter input circuit energized.

When automatic restart is specified, the converter shall be capable of catching an already spinning motor.

4.6.4 Inspection and Testing

Semiconductor assemblies for motor drives shall undergo Type tests, Routine tests and Optional tests, if any specifically required by the Owner, at manufacturer's production facility as per the Table below. The Type tests, Routine tests and Optional tests shall be conducted in the presence of and witnessed by an INTLREG Surveyor. Type tests shall be carried out one prototype of a converter or the first of a batch of identical converters. Routine tests shall be carried on each assembly. A summary of the required type tests and routine tests are given in the Table below:

No.	Tests (Refer Part 6-2-4[4.1.2.10]	Type Test	Routine Test	INTLREG Reference	IEC Test Reference
1	Visual inspection	x	x	Part 5B-6-[4.6.4.1] refer below	61800-5-1/5.2.1
2	Insulation test (AC or DC voltage test)	x	x	4.6.4.2/below	61800-5-1/5.2.3.2
3	Insulation resistance test	x	x	[4.6.4.4]below	60146-1-1/7.2.3.1
4	Impulse voltage test	x		[4.6.4.3] Refer below	61800-5-1/5.2.3.1
5	Cooling system test	x	x	[4.6.4.5] below	61800-5-1/5.2.4.5
6	Breakdown of components test	x		[4.6.4.6] below	61800-5-1/5.2.3.6.4
7	Light load and functional test	x	x	[4.6.4.7] below	60146-1-1/7.3.1
8	Rated current test	x		[4.6.4.8]	60146-1-1/7.3.2

				below	
9	Temperature rise test	x		[4-6-4.9] Below	61800-5-1/5.2.3.8
10	Capacitor discharge test	x		[4-6-4 10] below	61800-5-1/5.2.3.7

4.6.4.1 Visual Inspection

Semiconductor assemblies are subject to visual inspection for the following aspects:

i) Verify enclosure integrity, alignment of different cabinets in the assembly as per system drawings.

ii) Verify if nameplate is present as per. Chapter 6 Sect 6[4.6.3.3]

iii) Check if adequate and visible warning and safety labels are present.

iv) General hardware and electrical point-to-point wire check.

v) Verify correct routing and connections of fiber optic cables and ethernet cables.

vi) Verify correct connection of grounding wires on the assembly.

vii) Point-to-point inspection of cooling system, if applicable. For drive assemblies with liquid cooling, verification of proper installation of piping and hoses, correct orientation of flow restrictors and related coolant liquid monitoring instrumentation.

viii) Door interlocks, if any

4.6.4.2 Insulation Test (AC or DC Voltage Test)

Semiconductor assemblies shall be subject to insulation tests to ensure adequate dielectric strength of insulation of its components and to verify that clearance distances have not been compromised during manufacturing operations. The insulation test shall be performed with the appropriate AC or DC voltage (equal to the peak value of the specified AC rms voltage) mentioned in Table 21/ Table 22/Table 23 of IEC 61800-5-1(2007). The AC test voltage shall be voltage of sinusoidal wave form and a frequency of 50 Hz/60 Hz and shall be applied continuously for at least 60 seconds. All main power, control power and logic circuits have to be subject to the insulation test.

4.6.4.3 Impulse Voltage Test

Semiconductor assemblies shall be subject to an Impulse voltage test to simulate the impact of impulse transient over voltages generated in the mains supply or those caused by switching of equipment. The impulse voltage test shall be done as per 5.2.3.1 of IEC 61800-5-1. For purposes of selection of test voltages, the semiconductor assembly shall be treated as belonging to overvoltage category III.

Impulse voltage tests shall be done as a routine test on assemblies that do not satisfy the clearance and creepage distance requirements of Chapter 6 Sect 4[4.6.3.3]

4.6.4.4 Insulation Resistance Test

One minute after the insulation test, insulation resistance shall be measured by applying a direct voltage of at least 500 V.

4.6.4.5 Cooling System Test

Semiconductor assemblies shall be subject to cooling system tests that test for failure

of the cooling system and the associated response of the semiconductor assembly to these cooling system failures as per 5.2.4.5 of IEC 61800-5-1 (2007).

In addition, for liquid cooled semiconductor assemblies, the cooling piping system shall be subject to a coolant leak pressure test. The cooling system piping shall be hydrostatically tested to 1.5 times the design pressure for a period of 30 minutes. The pressure relief mechanism shall also be checked for proper calibration and operation. The cooling system shall be verified as having no leakage by monitoring the pressure and by visual inspection.

The instrumentation critical to the operation of the cooling system such as valve positions, programming of level switch sensors, flow sensors, pressure sensors, temperature sensors, pressure relief valve operation, coolant conductivity sensor, etc., shall be checked to ensure correct calibration and functionality.

4.6.4.6 Breakdown of Components Test

Components which have been identified by circuit analysis could result in a thermal or electric shock hazard shall be subject to a breakdown test as per 5.2.3.6.4 of IEC 61800-5-1.

4.6.4.7 Light Load and Functional Test

Semiconductor assemblies shall be subject to a light load and functional test to ensure that all parts of the electrical circuit and the cooling system work properly together and that the assembly meets the required proof of performance as per customer requirements. The main things to be checked include, but are not limited to:

i) Verify that the control equipment, auxiliaries, protection equipment and main circuit are operating properly together.

ii) Check power supplies to different power and control circuits of the assembly and associated communication control interfaces.

iii) Check pre-charge circuit settings.

iv) Verify the various software parameters.

v) Check for voltage/current sharing in the semiconductor devices used in the arms of the converter.

vi) Testing of the converter for scenarios like, but not limited to, emergency trip of the assembly, input fault protection, loss of cooling, local and remote control operation, etc.

vii) Testing of the converter for any specific customer defined scenario like output power ramp-down on loss of input power, ability of the converter to catch a spinning motor after recovering from a trip or from automatic restart, etc.

4.6.4.8 Rated Current Test

The test is carried out to verify that the equipment will operate satisfactorily at rated current. The DC terminals shall be short-circuited directly or with a reactor and an alternating voltage of sufficient value, to cause at least the rated continuous direct current to flow, shall be connected to the AC terminals of the converter and operation of the assembly shall be checked.

4.6.4.9 Temperature Rise Test

The test is carried out to verify that parts and accessible surfaces of the semiconductor assembly do not exceed temperature limits specified below and the manufacturer's temperature limits of safety-relevant parts. The temperature rise test shall be conducted at worst-case conditions of rated power and rated output current.

Materials and Components	Thermometer Method (°C)	Resistance Method (°C)
Rubber/Thermoplastic-insulated conductors	55	-
User terminals	Note 1	-
Copper bus bars and connecting straps	120	-
Winding Insulation Class A Class E Class B Class F Class H Class N	 95 100 105 115 135 175	 105 115 125 135 155 195
Phenolic composition	145	-
Bare resistor material	395	-
Capacitor	Note 2	-
Power switching semiconductors	Note 2	-
Printed wiring boards (PWB's)	Note 2	-
Liquid cooling medium	Note 2	-

Notes:

1 Maximum terminal temperature shall not exceed 15°C more than the insulation temperature rating of the conductor or cable specified by the manufacturer.

2 Maximum temperature shall be as specified by the manufacturer.

4.6.4.10 Capacitor Discharge Test

Verification of the capacitor discharge time as required in Chapter 6 Sect 4[4.6.4.7] is required to be done by a test and/or by calculation.

4.6.5 Integration Requirements

4.6.5.1 Integration

In cases where the semiconductor converters are integrated into larger assemblies that have other components (i.e., transformers, reactors, motors, etc.), the individual tests of the other components shall be done in accordance with relevant portions of the INTLREG Rules.

Installation requirements such as earthing of equipment, selection of cable and acceptable cable lengths, etc., should be as per manufacturer installation guidelines.

4.6.5.2 Reactors and Transformers for Semiconductor Converters

4.6.5.2(a) Voltage Regulation. Means to regulate transformer output voltage shall be provided to take care of increase in converter forward resistance and, in addition, to obtain the necessary performance characteristics of the converter unit in which the transformer is used.

4.6.5.2(b) High Temperature Alarm. Interphase reactors and transformers used with the semiconductor converters for main and auxiliary propulsion systems shall be provided with a high temperature alarm at the switchboard or the propulsion control station. The setting value of the alarm shall be determined by their specific insulation class and shall not to exceed the temperature corresponding to the limit listed in Chapter 6 Sect 4[4.5.2]

4.6.5.3 Critical Speeds

The semiconductor converter supplier, the driven equipment supplier and the Owner should come to an agreement on the calculations of the resulting critical lateral speeds of the whole mechanical string with special attention being paid to the following:

i) Take into account the influence of the stiffness of the bearing arrangement and the foundation.

ii) Avoid any continuous running with insufficient damping close to lateral critical speeds (±20%).

4.7 Other Electric and Electronics Devices

4.7.1 Circuit Breakers

4.7.1.1 General

Circuit breakers shall be constructed and tested to comply with IEC Publication 60947-2 or other recognized standard. The tests may be carried out by the manufacturer whose certificate of tests will be acceptable and shall be submitted upon request from INTLREG. Circuit breakers of the thermal type shall be calibrated for an ambient-air temperature, as provided in Chapter 6 Sect 1[1.10]

Note: Where thermal-type breakers are mounted within enclosures, it is pointed out that the temperature within the enclosure may exceed the designated ambient-air temperature.

4.7.1.2 Mechanical Property

Arc-rupturing and main contacts of all open frame circuit breakers shall be self-cleaning.

4.7.1.3 Isolation

The electrical system shall be arranged so that portions may be isolated to remove circuit breakers while maintaining services necessary for propulsion and safety of the vessel, or circuit breakers shall be mounted or arranged in such a manner that the breaker may be removed from the front without disconnecting the copper or cable connections or without de-energizing the supply to the breaker.

4.7.2 Fuses

Fuses shall be constructed and tested to comply with IEC Publication 60269 or other recognized standard. The tests may be carried out by the manufacturer whose certificate of tests will be acceptable and shall be submitted upon request from INTLREG. All components of the fuse shall be resistant to heat, mechanical stresses and corrosive influences which may occur in normal use.

4.7.3 Semiconductor Converters

4.7.3.1 General

The requirements in this subsection are applicable to static converters for essential and emergency services using semiconductor rectifying elements such as diodes, reverse blocking triodes thyristors, etc. The tests may be carried out by the manufacturer whose certificate of tests will be acceptable and shall be submitted upon request from INTLREG. All semiconductor converters will be accepted subject to a satisfactory performance test conducted after installation to the satisfaction of the Surveyor.

4.7.3.2 Cooling Arrangements

Semiconductor converters are preferably to be of a dry and air-cooled type. Where semiconductor converters are of a liquid-immersed type, a liquid over-temperature alarm and gas over-pressure protection devices shall be provided. If provision is made for breathing, a dehydrator shall be provided. Where arrangement for the forced cooling is provided, the circuit shall be designed so that power cannot be applied to, or retained on, converter stacks unless effective cooling is maintained.

4.7.3.3 Accessibility

Semiconductor converter stacks or semiconductor components shall be mounted in such a manner so that they can be removed from equipment without dismantling the complete unit.

4.7.3.4 Nameplate

A nameplate or identification shall be provided on the semiconductor converter and is to indicate at least the information refer Chapter 6 Sect 4/Table 6.4.4.d

4.7.4 Cable Junction Boxes

4.7.4.1 General

The design and construction of the junction boxes shall be in compliance with Part 6-6-3/[3.5] or other recognized standard. The tests may be carried out by the manufacturer whose certificate of tests will be acceptable and shall be submitted upon request from INTLREG.

4.7.4.2 Design and Construction

Live parts shall be mounted on durable flame-retardant moisture-resistant material, of permanently high dielectric strength and high resistance. The live parts shall be so arranged by suitable spacing or shielding with flame-retardant insulating material that short-circuit cannot readily occur between conductors of different polarity or between conductors and earthed metal. Junction boxes shall be made of flame-retardant material and shall be clearly identified, defining their function and voltage.

4.8 Cables and Wires

4.8.1 Cable Construction

4.8.1.1 General

Electric cables are to have conductors, insulation and moisture-resistant jackets, in accordance with IEC Publication 60092-350, 60092-352, 60092-353, 60092-354, 60092-360, 60092-370, 60092-376, or IEEE Std. 45. Other recognized marine standards will also be considered. The tests may be carried out by the manufacturer whose certificate of tests will be acceptable and shall be submitted upon request from INTLREG. Network cables are to comply with a recognized industry standard. Conductors shall be of copper and stranded in all sizes. Conductors are not to be less than the following in cross sectional size:

- 1.0 mm^2 (1,973.5 circ. mils) for power and lighting,
- 0.5 mm^2 (986.8 circ. mils) for control cables,
- 0.5 mm^2 (986.8 circ. mils) for essential or emergency signaling and communications cables, except for those assembled by the equipment manufacturer, and
- 0.35 mm^2 (690.8 circ. mils) for telephone cables for nonessential communication services, except for those assembled by the equipment manufacturer.

Refer Chapter 6 Sect 4 .Table 6.4.10 for current carrying capacity for insulated copper wires and cables.

For electric cables in hazardous areas, the electric cable construction and the cable glands are to achieve the appropriate seal, such that gas cannot migrate through the cable.

Note: Refer clause 3.16 and clause 4.6 of IEC 60092-350 concerning the provision of an extruded impervious inner sheath that will prevent the migration of gas through the cable.

4.8.1.2 Flame Retardant Property

4.8.1.2(a) Standards. All electric cables shall be at least of a flame retardant type complying with the following:

- Depending on the intended installation, cables constructed to IEC Publication 60092 standards are to comply with the flammability criteria of IEC Publication 60332-3-22 or 60332-3-21, Category A or A F/R, or
- Cables constructed to IEEE Std. 45 are to comply with the flammability criteria of that standard, or
- Cables constructed to another recognized marine standard, where specially approved, are to comply with the flammability criteria of IEC Publication 60332-3-22 or 60332-3-21, Category A or A F/R (depending on the intended installation) or other acceptable standards.

Consideration will be given to the special types of cables, such as radio frequency cable, which do not comply with the above requirements.

4.8.1.2(b) Alternative Arrangement . Flame-retardant marine cables, including network cables, which have not passed the above-mentioned bunched cable flammability criteria may be considered, provided that the cable is treated with approved flame-retardant material or the installation is provided with approved fire stop arrangements. Special

consideration may be given to the flame retardancy of special types of cables, such as radio frequency cables. When specifically approved, bus duct may be used in lieu of cable.

4.8.1.3 Fire Resistant Property

Where electrical cables are required to be fire resistant, they are to comply with the requirements of IEC Standard 60331-31 for cables greater than 20 mm overall in diameter, otherwise they are to comply with the IEC Standard 60331-21 for cable diameters 20 mm or less. For special cables, requirements in the following standards may be used:

- IEC Standard 60331-23: Procedures and requirements – Electric data cables
- IEC Standard 60331-25: Procedures and requirements – Optical fiber cables

Cables complying with alternative national standards suitable for use in a marine environment may be considered. Fire resistant type cables shall be easily distinguishable. Refer also Chapter 6 Sect 3[3.3.10]

4.8.1.4 Insulation Material

All electrical cables for power, lighting, communication, control and electronic circuits are to have insulation suitable for a conductor temperature of not less than 60°C (140°F).Chapter 6 Sect 4/Table 6.4.9 Refer for types of cable insulation.

4.8.1.5 Armor for Single-conductor Cables

The armor shall be nonmagnetic for single-conductor alternating-current cables.

4.8.1.6 Fiber Optic Cables

Fiber optic cables shall be constructed and tested to a recognized fiber optic cable construction standard acceptable to INTLREG. The requirements of flame retardancy for the electrical cables are applicable to the fiber optic cables. The construction of the fiber optic cable which may pass through or enter a hazardous area shall be such that escape of gases to a safe area shall not possible through the cable.

4.8.2 Portable and Flexing Electric Cables

Unless otherwise required in the Rules, cables for portable equipment and cables subject to flexing service need not be armored.

4.8.3 Mineral-insulated Metal-sheathed Cable

Mineral-insulated cable provided with approved fittings for terminating and connecting to boxes, outlets and other equipment may be used for any service up to 600 volts and may be used for feeders and branch circuits in both exposed and concealed work in dry or wet locations. The moisture-resisting jacket (sheath) of mineral-insulated metal-sheathed cable exposed to corrosive conditions shall be made of or protected by materials suitable for those conditions.

TABLE 6.4.1

Factory Test Schedule for Generators and Motors ≥100 kW (135 hp)

Tests		AC generators		AC motors		DC machines	
		Type test (1)	Routine test (2)	Type test (1)	Routine test (2)	Type test (1)	Routine test (2)
1	Visual inspection.	x	x	x	x	x	x
2	Insulation resistance measurement.	x	x	x	x	x	x
3	Winding resistance measurement.	x	x	x	x	x	x
4	Verification of voltage regulation system.	x	X (3)				
5	Rated load test and temperature rise measurement.	x		x		x	
6	Overload/over-current test.	x	x(4)	x	x(4)	x	x(4)
7	Verification of steady short circuit condition. (5)	x					
8	Over-speed test.	x	x	x(6)	x(6)	x(6)	x(6)
9	Dielectric strength test.	x	x	x	x	x	x
10	Running balance test. (7)	x	x	x	x	x	x
11	Verification of degree of protection.	x		x		x	
12	Bearing check after test.	x	x	x	x	x	x
13	Air gap measurement.	x	x			x	x
14	Commutation check.					x	

Notes:

1 Type tests apply to prototype machines or to at least the first of a batch of machines.

2 Machines to be routine tested are to have reference to the machine of the same type that has passed a type test. Reports of routine tested machines are to contain manufacturers' serial numbers of the type tested machines and the test results.

3 Only functional test of voltage regulator system.

4 Applicable only to generators and motors ≥ 100 kW (135 hp) for essential services.

5 Verification at steady short circuit condition applies to synchronous generators only.

6 Where so specified and agreed upon between purchaser and manufacturer. Not required for squirrel cage motors.

7 Static balance (machine rated 500 rpm or less) or dynamic balance (over 500 rpm) will be accepted in lieu of the specified test on machines to be close-coupled to engines and supplied without shaft and/or bearings, or with incomplete set of bearings.

TABLE 6.4.2

Dielectric Strength Test for Rotating Machines Refer also Part 6-4-4/[4.1.2.9]

Item		Machine or Part	Test Voltage (AC r m s)
1		Insulated windings of rotated machines having rated output less than 1 kVA, and of rated voltage less than 100 V with the exception of those in items 4 to 8.	500 V + twice the rated voltage.
2		Insulated windings of rotating machines having rated output less than 10,000 kVA with the exception of those in items 1 and 4 to 8 (Refer Note 2).	1,000 V + twice the rated voltage with minimum of 1,500 V (Refer Note 1).
3		Insulated windings of rotating machines having rated output 10,000 kVA or more, and of rated voltage (Refer Note 1) up to 24,000 V with the exception of those in items 4 to 8 (Refer Note 2).	1,000 V + twice the rated voltage.
4		Separately-excited field windings of DC machines.	1,000 V + twice the maximum rated circuit voltage with minimum of 1,500 V (Refer Note 1).
5		Field windings of synchronous generators and synchronous motors.	
	a)	Field windings of synchronous generators	Ten times the rated excitation voltage with a minimum of 1,500 V and a maximum of 3,500 V.
	b)	When the machine is intended to be started with the field winding short-circuited or connected across a resistance of value less than ten times the resistance of winding.	Ten times the rated excitation voltage with a minimum of 1,500 V and a maximum of 3,500 V.
	c)	When the machine will be started either with: the field winding connected across resistance or more than ten times the field winding resistance, or the field windings on open circuit or without a field dividing switch.	1,000 V + twice the maximum value of the voltage with a minimum of 1,500 V between the terminals of the field winding, or between the terminals of any section for a sectionalized field winding, which will be occurred under the specified starting conditions (Refer Note 3).
6		Secondary (usually rotor) windings of induction motors or synchronous induction motors if not permanently short- circuited (e.g., if intended for rheostatic starting)	
	a)	For non-reversing motors or motors reversible from standstill only.	1,000 V + twice the open-circuit standstill voltage as measured between slip-rings or secondary terminals with rated voltage applied to the primary windings.
	b)	For motors to be reversed or braked by reversing the primary supply while the motor is running.	1,000 V + four times the open-circuit standstill secondary voltage as defined in item 6.a. above.
7		Exciters (except as listed below) Exception 1—Exciters of synchronous motors (including synchronous induction motors) if connected to earth or disconnected from the field winding during starting Exception 2—Separately excited field windings of exciters (Refer Item 4 above).	As for windings to which they are connected. 1,000 V + twice the rated exciter voltage with a minimum of 1,500 V.

8	Assembled group of machines and apparatus.	A repetition of the tests in items 1 to 7 above shall be avoided if possible. But, if a test on an assembled group of several pieces of new apparatus, each one is made, the test voltage to be applied to such assembled group shall be 80% of the lowest test voltage appropriate for any part of the group (Refer Note 4).

Notes:

1 For two-phase windings having one terminal in common, the rated voltage for the purpose of calculating the test voltage shall be taken as 1.4 times the voltage of each separate phase.

2 High-voltage tests on machines having graded insulation shall be subject to special consideration.

3 The voltage, which is occurred between the terminals of field windings or sections thereof under the specified starting conditions, may be measured at any convenient reduced supply voltage. The voltage so measured shall be increased in the ratio of the specified starting supply voltage to the test supply voltage.

4 For windings of one or more machines connected together electrically, the voltage to be considered is the maximum voltage that occurs in relation to earth.

TABLE 6.4.3

Limits of Temperature Rise for Air-Cooled Rotating Machines [Refer Ch 6 Sect 4[4.2.6.1]

Ambient Temperature = 45°C

Item No.		*Part of Machine*	*Temperature Measuring Method*	*Limit of Temperature Rise, °C for Class of Insulation*				
				A	*E*	*B*	*F*	*H*
1	a)	AC windings of machines having rated output of 5,000 kW (or kVA) or more	Resistance	55	—	75	95	120
			Embedded temp. detector	60	—	80	100	125
	b)	AC windings of machines having rated output above 200 kW (or kVA) but less than 5,000 kW (or kVA)	Resistance	55	70	75	100	120
			Embedded temp. detector.	60	—	85	105	125
	c)	AC windings of machines having rated outputs of 200 kW (or kVA) or less (1)	Resistance	55	70	75	100	120
2		Windings of armatures having commutators	Thermometer	45	60	65	80	100
			Resistance	55	70	75	100	120
3		Field windings of AC and DC machines having DC excitation, other than those in item 4	Thermometer	45	60	65	80	100
			Resistance	55	70	75	100	120

4	a)	Field winding of synchronous machines with cylindrical rotors having DC excitation winding embedded in slots, except synchronous induction motors	Resistance	—	—	85	105	130
	b)	Stationary field windings of AC machines having more than one layer	Thermometer	45	60	65	80	100
			Resistance	55	70	75	100	120
			Embedded temp. detector.	—	—	85	105	130
	c)	Low resistance field winding of AC and DC machines and compensating windings of DC machines having more than one layer	Thermometer	55	70	75	95	120
			Resistance	55	70	75	95	120
	d)	Single-layer windings of AC and DC machines with exposed bare or varnished metal surfaces and single layer compensating windings of DC machines (2)	Thermometer	60	75	85	105	130
			Resistance	60	75	85	105	130
5		Permanently short-circuited windings	The temperature rise of any parts shall not to be detrimental to the insulating of that part or to any other part adjacent to it.					
6		Magnetic cores and all structural components, whether or not in direct contact with insulation (excluding bearings)						
7		Commutators, slip-rings and their brushes and brushing	The temperature rise of any parts shall not to be detrimental to the insulating of that part or to any other part adjacent to it. Additionally, the temperature shall not to exceed that at which the combination of brush grade and commutator/slip-ring materials can handle the current over the entire operating range.					

Notes

1 With application of the superposition test method to windings of machines rated 200 kW (or kVA) or less with insulation classes A, E, B or F, the limits of temperature rise given for the resistance method may be increased by 5°C.

2 Also includes multiple layer windings provided that the under layers are each in contact with the circulating coolant.

TABLE 6.4.4

Nameplates

a. Rotating Machines [Refer Chapter **6 Sect 4[4.2.7.9]**	**b. Accumulator Battery [Refer** Chapter 6 Sect 4[4.3..2..3]
The manufacturer's name	The manufacturer's name The type designation
The manufacturer's serial number (or identification mark) The year of manufacture	The rated voltage
Type of Machine (Generator or motor, etc.) Degree of protection enclosures (by IP code) Class of rating or duty type	The ampere-hour rating at a specific rate of discharge The specific gravity of the electrolyte
The rated output The rated voltage	(in the case of a lead-acid battery, the specific gravity when the battery is fully charged).
The rated current and type of current (AC or DC) The rated speed (r.p.m.) or speed range	**c . Transformer [Refer** Chapter 6 Sect 4[4.3.2.3]
The class of insulation or permissible temperature rise The ambient temperature	The manufacturer's name
	The manufacturer's serial number (or identification mark) The year of manufacture
Number of phase (for AC machines) The rated frequency (for AC machines) Power factor (for AC machines)	The number of phases The rated power
	The rated frequency
Type of winding (for DC machines)	The rated voltage in primary and secondary sides The rated current in primary and secondary sides
Exciter voltage (for synchronous machines or DC machines with separate excitation)	The class of insulation or permissible temperature rise The ambient temperature
Exciter current at rating (for synchronous machines or DC machines with separate excitation)	**d) Semiconductor Converter [Refer** Chapter **6 Sect 4[4.7.3.4]**
Open-circuit voltage between slip-rings and the slip-ring current for rated conditions (for wounded-rotor induction machines)	The manufacturer's name
	The identification number of the equipment

TABLE 6.4.5

Factory Testing Schedule for Switchboards, Motor Control Centers and Controllers [Refer Chapter 6 Sect 4[4.4.2 .1]

1 Insulation resistance measurements in accordance with Chapter 6 Sect 4[4.4.3]

2 Dielectric strength test in accordance with Chapter 6 Sect 4[4.4.4] and the table below.

3 Protective device tripping test, such as overcurrent tripping, emergency tripping, preferential tripping, etc.

4 Inspection of the assembly including inspection of wiring and, if necessary, electrical operation test.

Standard Test Voltage for Dielectric Strength Test

Rated Insulation Voltage	*Dielectric Test Voltage AC rms*
Up to and including 12 V	250 V
over 12 V to 60 V inclusive	500 V
over 60 V to 300 V inclusive	2000 V
over 300 V to 690 V inclusive	2500 V
over 690 V to 800 V inclusive	3000 V
over 800 V to 1000 V inclusive	3500 V
over 1000 V to 1500 V inclusive*	3500 V
Note: *For Direct-current (DC) only	

TABLE 6.4.6 (Chapter **6 Sect 4[4.4.6.5])**

Clearance and Creepage Distance for Switchboards, Distribution Boards, Chargers, Motor Control Centers and Controllers (1)

Rated insulation voltage (V)	*Minimum clearances mm (in.)*	*Minimum creepage distances mm (in.)*
Up to 250	15 ($^{19}/_{32}$)	20 ($^{25}/_{32}$)
From 251 to 660	20 ($^{25}/_{32}$)	30 ($1^{3}/_{16}$)
Above 660 (2)	25 (1)	35 ($1^{3}/_{8}$)

Notes:

1 The values in this table apply to clearances and creepage distances between live parts as well as between live parts and exposed conductive parts, including earthing.

2 For 1 kV to 15 kV systems, Refer Chapter 6Sect 5[5.1].

TABLE 6.4.7 Refer Chapter **6 Sect 4[4.4.8.4]**

Equipment and Instrumentation for Switchboard

Instrumentation and Equipment		Alternating-current (AC) Switchboard	Direct-current (DC) Switchboard
1.	Pilot Lamp	A pilot lamp for each generator connected between generator and circuit breaker. Refer Note 3.	A pilot lamp for each generator connected between generator and circuit breaker.
2.	Generator Disconnect	A generator switch or disconnecting links in series with the generator circuit breaker which is to disconnect completely all leads of the generator and the circuit breaker from the buses, except the earth lead. (1)	A generator switch, or disconnecting links, in series with the circuit breaker which will open positive, negative, neutral and equalizer leads, except that for 3-wire generators, equalizer poles may be provided on the circuit breaker. For 3-wire generators, the circuit breakers are to protect against a short circuit on the equalizer buses. (1)
3.	Field Rheostat	A field rheostat for each generator and each exciter. (2)	A field rheostat for each generator. (2).
4.	Insulation Monitor and Alarm	A means for continuously monitoring the electrical insulation level to earth, and an audible or visual alarm for abnormally low insulation values. (3)	A means for continuously monitoring the electrical insulation level to earth, and an audible or visual alarm for abnormally low insulation values. For 3-wire generators, Refer Ch 6 Sect 5[5.3.2]
5.	Ammeter	An ammeter for each generator with a selector switch to read the current of each phase. (3)	An ammeter for each 2-wire generator. For each 3-wire generator, an ammeter for each positive and negative lead and a center-zero ammeter in the earth connection at the generator switchboard. Ammeters shall be so located in the circuit as to indicate total generator current.
6.	Voltmeter	A voltmeter for each generator, with a selector switch to each phase of the generator and to one phase of the bus. (3)	A voltmeter for each generator with voltmeter switch for connecting the voltmeter to indicate generator voltage and bus voltage. For each 3-wire generator, a voltmeter with voltmeter switch for connecting the voltmeter to indicate generator voltage, positive to negative, positive to neutral, and neutral to negative. Where permanent provisions for shore connections are fitted, one voltmeter switch to provide also for reading shore-connection voltage, positive tonegative.
7.	Space Heater Pilot Lamp	Where electric heaters are provided for generators, a heater pilot lamp shall be fitted for each generator.	Where electric heaters are provided for generators, a heater pilot lamp shall be fitted for each generator.
8.	Synchroscope or Lamps	A synchroscope or synchronizing lamps with selector switch for paralleling in any combination. Refer Note 3.	Not applicable.
9.	Prime mover Speed Control	Control for prime mover speed for paralleling. (3)	Not applicable.
10.	Wattmeter	Where generators are arranged for parallel operation, an indicating wattmeter shall be fitted for each generator. (3)	Not applicable.
11.	Frequency Meter	A frequency meter with selector switch to connect to any generator. (3)	Not applicable.
12.	Field Switch	A double-pole field switch with discharge clips and resistor for each generator. (2)	Not applicable.

13.	Voltage Regulator	A voltage regulator. (3)	Not applicable.
14.	Stator Winding Temperature Indicator	For alternating current propulsion generator above 500 kW, a stator winding temperature indicator shall be fitted for each generator control panel. (3,4)	For direct current propulsion generator above 500 kW, an interpole winding temperature indicator shall be fitted for each generator control panel. (3,4)

Notes:

1 The switch or links may be omitted when draw-out or plug-in mounted generator breakers are furnished.

2 For generators with variable voltage exciters or rotary amplifier exciters, each controlled by voltage-regulator unit acting on the exciter field, the field switch, the discharge resistor and generator field rheostat may be omitted.

3 Where vessels have centralized control systems in accordance with Chapter 7 and the generators can be paralleled from the centralized control station, and the switchboard is located in the centralized control station, this equipment may be mounted on the control console.Refer Chapter 6 Sect 4[4.4.8.4]

4 For high voltage systems, Refer also Chapter 6 Sect 5[5.1.6.1]c

TABLE 6.4.8

Temperature Rise for Transformers (1, 2)

Insulation Class	*Average Winding-Temperature Rise Limits at Rated Current, °C (°F)*
A (105)	55 (99)
E (120)	70 (126)
B (130)	75 (135)
F (155)	95 (171)
H (180)	120 (216)
200	130 (234)
220	145 (261)

Notes:

1 Metallic parts in contact with or adjacent to insulation are not to attain a temperature in excess of that allowed for the hottest-spot copper temperature adjacent to that insulation.

2 Temperature rises are based on an ambient temperature of 45°C (113°F)Chapter 6 Sect 4[4.5.2]

TABLE 6.4.9 (Refer Chapter 6 Sect 4[4.8.1.4]

Types of Cable Insulation

Insulation Type Designation	*Insulation Materials*	*Maximum Conductor Temperature*
V75, PVC	Polyvinyl Chloride – Heat resisting	75°C (167°F) *
R85, XLPE	Cross-linked Polyethylene	85°C (185°F) *
E85, EPR	Ethylene Propylene Rubber	85°C (185°F) *
R90, XLPE	Cross-linked Polyethylene	90°C (194°F) *
E90, EPR	Ethylene Propylene Rubber	90°C (194°F) *
M95	Mineral (MI)	95°C (203°F) *
S95	Silicone Rubber	95°C (203°F) *

* A maximum conductor temperature of 250°C (482°F) is permissible for special applications and standard end fittings may be used, provided the temperature does not exceed 85°C (185°F) at the end of fittings. However, when the temperature at the end of the fittings is higher than 85°C (185°F), special consideration will be given to an appropriate end fitting.

TABLE 6.4.10

Maximum Current Carrying Capacity for Insulated Copper Wires and Cables

Conductor Size		Maximum Current in Amperes (Refer Chapter 6 Sect 4[4.8.1.1] 45°C (113°F) Ambient; 750 V and Less, AC or DC; Refer Notes											
		1-core				2-core				3- or 4-core			
mm2	103 Circ mils	V75	R85 XLPE E85 EPR	R90 XLPE E90 EPR	M95 S95	V75	R85 XLPE E85 EPR	R90 XLPE E90 EPR	M95 S95	V75	R85 XLPE E85 EPR	R90 XLPE E90 EPR	M95 S95
1.0		13	16		20	11	14		17	9	11		14
1.25		15	18		23	13	15		20	11	13		16
1.5		17	21	23	26	14	18	20	22	12	15	16	18
	4.11	21	25		32	18	21		27	15	18		22
2.5		24	28	30	32	20	24	26	27	17	20	21	22
	6.53	28	34		38	24	29		32	20	24		27
4		32	38	40	43	27	32	34	37	22	27	28	30
	10.4	38	45		51	32	38		43	27	32		36
6		41	49	52	55	35	42	44	47	29	34	36	39
	16.5	51	60		68	43	51		58	36	42		48
10		57	67	72	76	48	57	61	65	40	47	50	53
	20.8	59	70		78	50	60		66	41	49		55
	26.3	68	81		91	58	69		77	48	57		64
16		76	91	96	102	65	77	82	87	53	64	67	71
	33.1	79	93		105	67	79		89	55	65		74
	41.7	91	108		121	77	92		103	64	76		85
25		101	120	127	135	86	102	108	115	71	84	89	95
	52.6	105	124		140	89	105		119	74	87		98
	66.4	121	144		162	103	122		138	85	101		113

35		125	148	157	166	106	126	133	141	88	104	110	116
	83.7	140	166		187	119	141		159	98	116		131
50		156	184	196	208	133	156	167	177	109	129	137	146
	106	163	193		217	139	164		184	114	135		152
	133	188	222		250	160	189		213	132	155		175
70		192	228	242	256	163	194	206	218	134	160	169	179
	168	217	257		289	184	218		246	152	180		202
95		232	276	293	310	197	235	249	264	162	193	205	217
	212	251	297		335	213	252		285	176	208		235
120		269	319	339	359	229	271	288	305	188	223	237	251
	250	278	330		371	236	281		315	195	231		260
150		309	367	389	412	263	312	331	350	216	257	272	288
	300	312	370		416	265	315		354	218	259		291
	350	343	407		458	292	346		389	240	285		321
185		353	418	444	470	300	355	377	400	247	293	311	329
	400	373	442		498	317	376		423	261	309		349
	450	402	476		536	342	405		456	281	333		375
240		415	492	522	553	353	418	444	470	291	344	365	387
	500	429	509		572	365	433		486	300	356		400
	550	455	540		607	387	459		516	319	378		425
300		477	565	601	636	405	480	511	541	334	396	421	445
	600	481	570		641	409	485		545	337	399		449
	650	506	599		674	430	509		573	354	419		472
	700	529	628		706	450	534		600	370	440		494
	750	553	655		737	470	557		626	387	459		516
400		571	677	690	761	485	575	587	647	400	474	483	533
	800	576	682		767	490	580		652	403	477		540
	850	598	709		797	508	603		677	419	496		558
	900	620	734		826	527	624		702	434	514		578
	950	641	760		854	545	646		726	449	532		598
500		656	778	780	875	558	661	663	744	459	545	546	613
	1000	662	784		882	563	666		750	463	549		617
600		736	872		981	626	741		834	515	610		687
625		755	894		1006	642	760		855	529	626		704

Notes:

1 The values given above have been calculated for an ambient of 45°C (113°F), and assume that a conductor temperature equal to the maximum rated temperature of the insulation is reached and maintained continuously in the case of a group of four cables bunched together and laid in free air.

2 The current rating values given in Table 6.4.10 (and those derived therefrom) may be considered applicable, without correction factors, for cables double-banked on cable trays, in cable conduits or cable pipes, except as noted in Note 3.

3 For bunched cables, Refer Chapter 6 Sect 3[3.3.7.1].

4 These current ratings are applicable for both armored and unarmored cables.

5 If ambient temperature differs from 45°C (113°F), the values in Table 6.4.10 shall be multiplied by the following factors

Maximum Conductor Temperature	*Ambient Correction Factor*					
	40°C (104°F)	*50°C (122°F)*	*55°C (131°F)*	*60°C (140°F)*	*65°C (149°F)*	*70°C (158°F)*
75°C (167°F)	1.08	0.91	0.82	0.71	0.58	—
85°C (185°F)	1.06	0.94	0.87	0.79	0.71	0.61
90°C (194°F)	1.05	0.94	0.88	0.82	0.74	0.67
95°C (203°F)	1.05	0.95	0.89	0.84	0.77	0.71

6 Where the number of conductors in a cable exceeds four, as in control cables, the maximum current carrying capacity of each conductor shall be reduced as in the following table:

No. of Conductors	*% of 3–4/C TYPE Values in Table 6.4.10*
5–6	80
7–24	70
25–42	60
43 and above	50

7 When a mineral-insulated cable is installed in such a location that its copper sheath is liable to be touched when in service, the current rating shall be multiplied by the correction factor 0.80 in order that the sheath temperature does not exceed 70°C (158°F).

8 Cables being accepted based on approved alternate standard may have current carrying capacity of that standard, provided the cables are in full compliance with that standard.

TABLE 6.4.11

Additional Services Requiring Electrical Equipment to be Designed, Constructed and Tested to the Requirements in Section Chapter 6 Section 4

Refer Chapter **6 Sect 4[4.1],** Chapter **6 Sect 4[4.2.1.1],** Chapter **6 Sect4[4.2.2.1] ,** Chapter **6 Sect 4[4.4.1.1],** Chapter **6 Sect 4[4.4.2.1]**

(a)	Equipment necessary for specific class notations (Such as refrigerated cargo notations, dynamic positioning systems, etc.). Refer Note.
(b)	Cargo Pump Motors (oil carriers, gas carriers, chemical carriers, liquefied gas carriers, etc.)
(c)	Motors for hydraulic power unit for hydraulically driven cargo pump motors
(d)	High duty gas compressors on liquefied gas carriers

SECTION 5 SPECIALIZED INSTALLATIONS

Contents

5.1 High Voltage Systems

5.1.1 General

5.1.1.1 Application

The following requirements in this Subsection are applicable to AC systems with nominal voltage (phase to phase) exceeding 1 kV.

If otherwise stated herein, construction and installation applicable to low voltage equipment generally apply to high voltage equipment as well.

5.1.1.2 Standard Voltages

The nominal standard voltage shall not to exceed 15 kV. A higher voltage may be considered for special application.

5.1.1.3 Air Clearance and Creepage Distance

5.1.1.3(a) Air Clearance. Phase-to-phase air clearances and phase-to-earth air clearances between non-insulated parts shall be not less than the minimum as specified below:

Nominal Voltage in kV	Minimum Air Clearance in mm (in.)
3–3.3	55 (2.2)
6–6.6	90 (3.6)
10–11	120 (4.8)
15	160 (6.3)

Where intermediate values of nominal voltages are accepted, the next higher air clearance shall be observed. In the case of smaller distances, an appropriate voltage impulse test is to be applied

5.1.1.3(b) Reduction. Alternatively, reduced clearance distances may be used provided:

i) The equipment shall not installed in 'Machinery Spaces of Category A' or in areas affected by a Local Fixed Pressure Water-spraying or Local Water-mist Fire Extinguishing System.

ii) The equipment is subject to an impulse voltage test with test voltage values shown in Table below. Where intermediate values of rated operational voltage are used, the next higher rated impulse withstand test voltage shall be used. The impulse voltage test reports shall be submitted to INTLREG for review.

Rated Voltage kV	Rated Impulse Withstand Voltage kV (peak value)
3.6	40
7.2	60
12	75
15	95

5.1.1.3(c) Insulating Material. Any insulating material that is used to cover live parts of equipment used to comply with clearance distance requirements shall be suitable for the application. The equipment manufacturer is to submit documentation which demonstrates the suitability of such insulation material.

5.1.1.3(d) Creepage Distances.

Creepage distances between live parts and between live parts and earthed metal parts are to be adequate for the nominal voltage of the system, due regard being paid to the comparative tracking index of insulating materials under moist conditions according to the IEC Publication 60112 and to the transient overvoltage developed by switching and fault conditions.

i) The minimum creepage distances for main switchboards and generators are given in the Table below:

Nominal Voltage V	Minimum Creepage Distance for Proof Tracking Index mm (in.)			
	300 V	375 V	500 V	>600 V
1000-1100	26 (1.02)(1)	24 (0.94)(1)	22 (0.87)(1)	20 (0.79)(1)
< 3300	63 (2.48)	59 (2.32)	53 (2.09)	48 (1.89)
< 6600	113 (4.45)	108 (4.25)	99 (3.9)	90 (3.54)
≤11000(2)	183 (7.20)	175 (6.89)	162 (6.38)	150 (5.91)

Notes:

1. A distance of 35 mm is required for busbars and other bare conductors in main switchboards.
2. Creepage distances for equipment with nominal voltage above 11 kV shall be subject to consideration.

ii) The minimum creepage distances for equipment other than main switchboards and generators are given in the Table below:

Nominal Voltage V	Minimum Creepage Distance for Proof Tracking Index mm (in.)			
	300 V	375 V	500 V	>600 V
1000-1100	18 (0.71)	17 (0.67)	15 (0.59)	14 (0.55)
< 3300	42 (1.65)	41 (1.61)	38 (1.50)	26 (1.02)
< 6600	83 (3.27)	80 (3.15)	75 (2.95)	70 (2.76)
≤ 11000*	146 (5.75)	140 (5.51)	130 (5.11)	120 (4.72)

* *Note:* Creepage distances for equipment with nominal voltage above 11 kV shall be subject to consideration.

5.1.2 System Design

5.1.2.1 Selective Coordination

Selective coordination shall be in accordance with Chapter 6 Sect 2[2.5.1.6] regardless of the system neutral earthing arrangement.

5.1.2.2 Earthed Neutral Systems

5.1.2.2(a) Neutral earthing - The current in the earth fault condition shall be not in excess of full load current of the largest generator on the switchboard or relevant switchboard section and in no case less than three times the minimum current required for operation of any device in the earth fault condition.

At least one source neutral to ground connection shall be available whenever the system is in the energized mode.

5.1.2.2(b) Equipment- Electrical equipment in directly earthed neutral or other neutral earthed systems shall be able to withstand the current due to a single phase fault against earth for a period necessary to trip the protection device.

5.1.2.3 Neutral Disconnection.

Means of disconnection are to be fitted in the neutral earthing connection of each generator so that the generator may be disconnected for maintenance and for insulation resistance measurement

5.1.2.4 Hull Connection of Earthing Impedance

All earthing impedances shall be connected to the hull. The connection to the hull shall be so arranged that any circulating currents in the earth connections will not interfere with radio, radar, communication and control equipment circuits. In systems with neutral earthed, connection of the neutral to the hull shall be provided for each generator switchboard section.

5.1.2.5 Earth Fault Detection

An earth fault shall be indicated by means of visual and audible alarm. In low impedance or direct earthed systems, provision shall be made to disconnect automatically the faulty circuits. In high impedance earthed systems where outgoing feeders will not be isolated in case of an earth fault, the insulation of the equipment shall be designed for the phase to phase voltage.

5.1.2.6 Number and Capacity of Transformers

The number and capacity of transformers is to be sufficient, under seagoing conditions, with any three-phase transformer or any one transformer of three single phase transformer bank out of service to carry those electrical loads for essential service and for minimum comfortable conditions of habitability. For this purpose, and for the purpose of immediate continuity of supply, the provision of a single-phase transformer carried onboard as a spare for a three phase transformer bank or V-V connection by two remaining single-phase transformers is not acceptable.Refer Chapter 6 Sect 2[2.4.1.6](a)

5.1.3 Circuit Breakers and Switches – Auxiliary Circuit Power Supply Systems

5.1.3.1 Source and Capacity of Power Supply

Where electrical energy or mechanical energy is required for the operation of circuit breakers and switches, a means of storing such energy shall be provided with a capacity at least sufficient for two on/off operation cycles of all of the components. However, the tripping due to overload or short-circuit, and under-voltage shall be independent of any stored electrical energy sources. This does not preclude the use of stored energy for shunt tripping, provided alarms are activated upon loss of continuity in the release circuits and power supply failures. The stored energy may be supplied from within the circuit in which the circuit breakers or switches are located.

5.1.3.2 Number of External Sources of Stored Energy

Where the stored energy is supplied from a source external to the circuit, such supply shall be from at least two sources so arranged that a failure or loss of one source will not cause the loss of more than one set of generators and/or essential services. Where neccessary one source of supply shall be from the emergency source of electrical power for dead ship condition

5.1.4 Circuit Protection

5.1.4.1 Protection of Generator

Protection against phase-to-phase fault in the cables connecting the generators to the switchboard and against inter-winding faults within the generator shall be provided. This is to trip the generator circuit breaker and automatically de-excite the generator. In distribution systems with a low impedance earthed neutral, phase to earth faults shall be likewise treated.

Protective devices are to be provided against phase-to-phase faults in the cables connecting the generators to the switchboard and against inter-winding faults within the generators. The protective devices are to trip the generator circuit breaker and to automatically de-excite the generator. In distribution systems with a low impedance earthed neutral, phase to earth faults are to be likewise treated

5.1.4.2 Protection of Power Transformers

Power transformers shall be provided with overload and short circuit protection. Each high-voltage transformer intended to supply power to the low-voltage ship service switchboard shall be protected in accordance with Chapter 6 Sect 2[2.5.8] In addition, the following means for protecting the transformers or the electric distribution system shall be provided:

5.1.4.2(a) Coordinated Trips of Protective Devices Discriminative tripping is to be provided for the following. Refer . Chapter 6 Sect 2[2.5.1.6]

i) Between the primary side protective device of the transformer and the feeder protective devices on the low-voltage ship service switchboard, or

ii) Between the secondary side protective device of the transformer, if fitted, and the feeder protective devices on the low-voltage ship service switchboard.

5.1.4.2(b) Load Shedding Arrangement Where the power is supplied through a single set of three-phase transformers to a low-voltage ship service switchboard, automatic load shedding arrangements shall be provided when the total load connected to the low voltage ship service switchboard exceeds the rated capacity of the transformer. Refer Chapter 6 Sect 2[2.1.4] and Chapter 6 Sect 2[2.5.2.3]

5.1.4.2(c) Protection from Electrical Disturbance Means or arrangements shall be provided for protecting the transformers from voltage transients generated within the system due to circuit conditions, such as high-frequency current interruption and current suppression (chopping) as the result of switching, vacuum cartridge circuit breaker operation or thyristor-switching.

An analysis or data for the estimated voltage transients shall be submitted to show that the insulation of the transformer is capable of withstanding the estimated voltage transients. Chapter 6 Sect 5[5.1.6.3](b)

5.1.4.2(d) Protection from Earth Faults Where a Y-neutral of three-phase transformer windings is earthed, means for detecting an earth fault shall be provided. The detection of the earth fault is to activate an alarm at the manned control station or to automatically disconnect the transformer from the high-voltage power distribution network.

5.1.4.2(e) Transformers Arranged in Parallel Refer Chapter *6 Sect 2[2.5.8.2]*

When transformers are connected in parallel, tripping of the protective devices at the primary side is to automatically trip the switch or protective devices connected at the secondary side.

5.1.4.3 Voltage Transformers for Control and Instrumentation

Voltage transformers shall be provided with overload and short circuit protection on the secondary side.

5.1.4.4 Fuses

Fuses are not to be used for overload protection.

5.1.4.5 Over Voltage Protection

Lower voltage systems supplied through transformers from high voltage systems shall be protected against over voltages. This may be achieved by:

i) Direct earthing of the lower voltage system,

ii) Appropriate neutral voltage limiters, or

iii) Earthed screen between primary and secondary winding of transformers

5.1.5 Equipment Installation and Arrangement

5.1.5.1 Degree of Protection

The degree of equipment protection shall be in accordance with Chapter 6 Sect 3/ Table 6.3.1

5.1.5.2 Protective Arrangements

5.1.5.2(a) Interlocking Arrangements. Where high-voltage equipment shall not contained in an enclosure but a room forms the enclosure of the equipment, the access doors shall be so interlocked that they cannot be opened until the supply is isolated and the equipment earthed down.

5.1.5.2(b) Warning Plate At the entrance of such spaces, a suitable marking shall be placed which indicates danger of high-voltage and the maximum voltage inside the space. For high-voltage electrical equipment installed outside these spaces, a similar marking shall be provided. An adequate, unobstructed working space shall be left in the vicinity of high voltage equipment for preventing potential severe injuries to personnel performing maintenance activities. In addition, the clearance between the switchboard and the ceiling/deck head above is to meet the requirements of the Internal Arc Classification according to IEC 62271-200.

5.1.5.2(c) Exposure of HV Equipment to Damaging Environment. Consideration should be given to designing the arrangement of the installation to avoid exposure of high voltage equipment to contaminants, such as oil or dust, as might be found in machinery spaces or close to ventilation air inlets to the space, or to water spray from water-mist systems and local fire hose connections.

5.1.5.3 Cables

5.1.5.3(a) Runs of Cables In accommodation spaces, high voltage cables shall be run in enclosed cable transit systems.

5.1.5.3(b) Segregation High voltage cables of different voltage ratings are not to be installed in the same cable bunch, duct, pipe or box. Where high voltage cables of different voltage ratings are installed on the same cable tray, the air clearance between cables shall not to be less than the minimum air clearance for the higher voltage side in Part 6-2-5/[5.1.5.2]. However, high voltage cables are not to be installed on the same cable tray for the cables operating at the nominal system voltage of 1 kV or less.

Higher voltage equipment shall not to be combined with lower voltage equipment in the same enclosure, unless segregation or other suitable measures are taken to ensure safe access to lower voltage equipment

5.1.5.3(c) Installation Arrangements High voltage cables shall be installed on cable trays or equivalent when they are provided with a continuous metallic sheath or armor which is effectively bonded to earth. Otherwise, they shall be installed for their entire length in metallic casings effectively bonded to earth.

5.1.5.3(d) Termination and Splices - Terminations in all conductors of high voltage cables shall be, as far as practicable, effectively covered with suitable insulating material. In terminal boxes, if conductors are not insulated, phases shall be separated from earth and from each other by substantial barriers of suitable insulating materials. High voltage cables of the radial field type (i.e., having a conductive layer to control the electric field within the insulation) are to have terminations which provide electric stress control.

5.1.5.3(e) Terminations shall be of a type compatible with the insulation and jacket material of the cable and shall be provided with means to ground all metallic shielding components (i.e., tapes, wires, etc.).

5.1.5.3(f) Splices and joints are not permitted in propulsion cables. For purposes of this Rule, propulsion cables are those cables whose service is related only to propulsion.

5.1.5.3(g) Cable Rating -The rated phase to earth voltage (U_O) of high voltage cables shall not be less than shown in the Table below:

Nominal System Voltage (Un) (kV)	Highest System Voltage (Um) (kV)	Rated Phase to Earth Voltage (Uo) (kV)	
		Systems with Automatic Disconnection Upon Detection of an Earth Fault	Systems without Automatic Disconnection Upon Detection of an Earth Fault
3.0	3.6	1.8	3.6
3.3	3.6	1.8	3.6
6.0	7.2	3.6	6.0
6.6	7.2	3.6	6.6
10.0	12.0	6.0	10.0
11.0	12.0	6.0	11.0
15.0	17.5	8.7	15.0

5.1.5.3(f) Cable Current Carrying Capacities. The maximum current carrying capacity of high voltage cables shall be in accordance with the Table below:

Conductor Size (mm2)	Maximum Current in Amperes 45°C Ambient; 1000 V and More			
	1-Core		3-Core	
	85°C	90°C	85°C	90°C
16	80	85	55	60
25	105	115	75	80
35	130	140	90	95
50	165	175	115	120
70	205	215	140	150
95	245	260	170	185
120	285	305	200	210
150	330	350	230	245
185	375	400	260	280
240	440	470	310	325
300	505	540	355	375
400	605	645	425	450
500	700	740	490	520

5.1.5.3(g) Marking. High voltage cables shall be readily identifiable by suitable marking.

5.1.5.3(h) Cable Test after Installation. A voltage withstand test shall be carried out on each completed cable and its accessories before a new high voltage installation, including additions to an existing installation, is put into service.

An insulation resistance test shall be carried out prior to the voltage withstand test being conducted.

For cables with rated voltage (U_O/U) above 1.8/3 kV (U_m = 3.6 kV) an AC voltage withstand test may be carried out upon advice from high voltage cable manufacturer. One of the following test methods to be used:

i) An AC test voltage for 5 min with the phase-to-phase voltage of the system applied between the conductor and the metallic screen/sheath.

ii) An AC voltage test for 24 h with the normal operating voltage of the system.

iii) A DC test voltage equal to $4U_O$ may be applied for 15 minutes.

For cables with rated voltage (U_O/U) up to 1.8/3 kV (U_m = 3.6 kV), a DC voltage equal to $4U_O$ shall be applied for 15 minutes.

After completion of the test, the conductors shall be connected to earth for a sufficient period in order to remove any trapped electric charge.

The insulation resistance test is then repeated.
The above tests are for newly installed cables. If due to repairs or modifications, cables which have been in use shall be tested, lower voltages and shorter durations should be considered.

5.1.5.4 High Voltage Shore Connection

Where arrangements are made for the supply of electricity at high voltage from onshore, and designed to allow the shipboard generators to be shut down while in port, the requirements given in the INTLREG *Guide for High Voltage Shore Connection*.

5.1.6 Machinery and Equipment

5.1.6.1 Rotating Machines

5.1.6.1(a) Protection . Refer to Chapter 6 Sect 5/Table 6.5.1 for ingress protection (IP) requirements.

5.1.6.1(b) Windings - Generator stator windings are to have all phase ends brought out for the installation of the differential protection.

5.1.6.1(c) Temperature Detectors. Rotating machines shall be provided with temperature detectors in their stator windings to actuate a visual and audible alarm in a normally attended position whenever the temperature exceeds the permissible limit. If embedded temperature detectors are used, means shall be provided to protect the circuit against over-voltage.

5.1.6.1(d) Space Heater. Effective means shall be provided to prevent the accumulation of moisture and condensation within the machines when they are idle.

5.1.6.1(e) Tests Each design of HV generator and motor shall be assessed by testing in accordance with the “type tests” schedule indicated in Chapter 6 Sect 4/Table 6.4.1. Each subsequent production unit of and accepted design shall be tested in accordance with the “routine tests” schedule also indicated in Chapter 6 Sect 4/Table 6.4.1.

i) Inter-turn Insulation Test. In addition to the tests normally required for rotating machinery, a high frequency, high voltage test, in accordance with IEC Publication 60034-15, shall be carried out on the individual coils in order to demonstrate a satisfactory withstand level of the inter-turn insulation to steep fronted switching surges.

ii) Immediately after the high voltage test the insulation resistance shall be measured using a direct current insulation test meter between:

a) All current carrying parts connected together and earth

b) All current carrying parts of different polarity or phase where both the ends of each polarity or phase are individually accessible.

The minimum values of test voltage and corresponding insulation resistance are given in the table below. The insulation resistance shall be measured close to the operating temperature. If this shall not possible then an approved method of calculation shall be used.

Rated Voltage Un (V)	Minimum Test Voltage (V)	Minimum Insulation Resistance (MΩ)
1000< Un ≤≤ 7200	1000	Un/1000 + 1
7200 < Un≤ ≤ 15000	5000	Un/1000 + 1

5.1.6.2 Switchgear and Control-gear Assemblies

Switchgear and control gear assemblies shall be constructed according to the IEC Publication 62271-200 and the following additional requirements:

5.1.6.2(a) Mechanical Construction and Configuration -

i) Switchgear shall be of metal-enclosed type in accordance with IEC Publication 62271-200 or of the insulation-enclosed type in accordance with IEC Publication 62271-201.

ii) Refer to for requirements for the division of main bus bars.

5.1.6.2(b) Clearance and Creepage Distances. For clearance and creepage distances, Refer Chapter 6 Sect 5[5.1.1.3]

5.1.6.2(c) Locking Facilities. With drawable circuit breakers and switches shall be provided with mechanical locking facilities in both service and disconnected positions. For maintenance purposes, key locking of with drawable circuit breakers, switches and fixed disconnectors shall be possible. With drawable circuit breakers, when in the service position, are to have no relative motion between fixed and moving parts.

5.1.6.2(d) Shutters The fixed contacts of withdrawable circuit breakers and switches shall be so arranged that in the withdrawn position, the live contacts of the bus bars are automatically covered. Shutters shall be clearly marked for incoming and outgoing circuits. This may be achieved with the use of colors or labels.

5.1.6.2(e) Earthing and Short-circuiting Facilities - For maintenance purposes, an adequate number of earthing and short circuiting facilities shall be provided to enable equipment and cables to be earthed or short-circuited to earth before being worked upon.

5.1.6.2(f) Arc Flash and Associated Installation Requirements

i) Internal Arc Classification (IAC). Switchgear and control gear assemblies shall be Internal Arc Classified (IAC). Where switchgear and control gear are accessible by authorized personnel only accessibility Type A is sufficient (IEC 62271-200; Annex AA; AA 2.2). Accessibility Type B is required if accessible by non-authorized personnel. Installation and location of the switchgear and control gear is to correspond with its internal arc classification and classified sides (F, L and R).

ii) Calculations, in accordance with the applicable parts of Standard IEEE 1584 or other recognized standard, shall be made to establish:

- The maximum current that can flow in the case of an arc fault
- The maximum time and current that could flow if arc protection techniques are adopted
- The distance, from the location of the arc flash, at which the arc flash energy would be 1.2 calories per cm^2 if the enclosure is open

iii) In addition to the marking required by the equipment design standard, arc flash data consistent with the Design Operating Philosophy and the required PPE is also to be indicated at each location where work on the HV equipment could be conducted.

5.1.6.2(g) Tests —A power frequency voltage test shall be carried out on high voltage switchgear and control-gear assemblies with test voltages shown in the Table below. The test procedure shall be in accordance with IEC Publication 62271-200.

Rated Voltage (kV)	Rated Power Frequency Withstand Voltage (kV)
3.6	10
7.2	20
12	28
15	38

Where intermediate values of switchgear rated voltages are used, the next higher power frequency withstand test voltage shall be used.

5.1.6.3 Transformers

5.1.6.3(a) Application -Provisions of Sect 5[5.1.6.3] are applicable to power transformers for essential services.Refer Chapter 6 Sect4 [4.5] . Also Sect 5[5.1.6.3] (c) and Sect 5[5.1.6.3] (d) are applicable to transformers of the dry type only. These requirements are not applicable to transformers intended for the following services:

- Instrument transformers.
- Transformers for static converters.
- Starting transformers.

Dry type transformers are to comply with the applicable Parts of the IEC Publication 60076-11. Liquid filled transformers are to comply with the applicable Parts of the IEC 60076 Series. Oil immersed transformers shall be provided with the following alarms and protections:

- Liquid level (Low) – alarm
- Liquid temperature (High) – alarm
- Liquid level (Low) – trip or load reduction
- Liquid temperature (High) – trip or load reduction
- Gas pressure relay (High) – trip

5.1.6.3(b) Plans In addition to the details required in Chapter 6 Sect 4[4.5], the applicable standard of construction and the rated withstanding voltage of the insulation are also to be submitted for review.

5.1.6.3(c) Enclosure Transformers are to have a degree of protection in accordance with Chapter 6 Sect 1/Table 6.1.2 but not less than IP23. However, when installed in spaces accessible to unqualified personnel, the degree of protection shall be increased to IP44. For transformers not contained in enclosures, Refer. Chapter 6 Sect 5[5.1.5.1]

5.1.6.3(d) Space heater. Effective means to prevent accumulation of moisture and condensation within the transformers (when de-energized) shall be provided.

5.1.6.3(e) Testing - Three-phase transformers or three-phase bank transformers of 100 kVA and above shall be tested in the presence of the Surveyor. The test items shall be in accordance with the standard applicable to the transformer. The tests are also to be carried out in the presence of the Surveyor for each individual transformer. Transformers of less than 100 kVA will be accepted subject to a satisfactory performance test conducted to the satisfaction of the Surveyor after installation.

Specific requirements are applicable for the following tests:

i) In the dielectric strength test, the short duration power frequency withstand voltage to be applied is to follow the standard applicable to the transformer but not less than the estimated voltage transient generated within the system. If the short duration power frequency withstand voltage shall not specified in the applicable standard, IEC 60076-3 shall be referred to. For the voltage transient, Refer Chapter 6 Sect 5[5.1.4.2](c)

ii) The induced over-voltage withstand test (layer test) is also to be carried out in accordance with the standard applicable to the transformers in the presence of the Surveyor. This test is intended to verify the power-frequency withstand strength along the winding under test and between its phase (strength between turns and between layers in the windings). If the induced over-voltage withstand test shall not specified in the applicable standard, IEC 60076-3 shall be referred to.

5.1.6.3(f) Nameplate In addition to the requirements in Chapter 6 Sect 4/Table 6.4.4c the following information is also to be indicated on the nameplate:

- Applicable standard
- Short duration power frequency withstand voltage for verification of insulation level of each winding

5.1.6.4 Cables

5.1.6.4(a) Standards. Cables shall be constructed to IEC Publication 60092-353, 60092-354 or other equivalent recognized standard. Refer also Chapter 6 Sect 4[4.8.1]

5.1.7 Design Operating Philosophy

5.1.7.1 Objective

While this section covers the specific INTLREG requirements for High Voltage (HV) systems, it is recognized that system design and equipment construction are only parts of an overall approach that are required to allow HV systems to be operated safely. Other aspects that contribute towards HV safety include maintenance procedures, vessel and equipment operating procedures, permit to work procedures, company safety policy, personal protective equipment (PPE) and training, most of which are beyond the role of Classification. However, in order to assist INTLREG in its review of the design and construction of the vessel and its equipment it is necessary for INTLREG to be assured that the design is part of a larger overall approach or plan.

The High Voltage Design Principles document is to outline the concepts that are the basis of the design. It should identify risks and document the strategies that are used to mitigate each of the risks (e.g., remote switching, arc flash energy reduction equipment).

5.1.7.2 HV System Failures

The design should take into account each reasonably foreseeable failure type and address what actions will be expected of the crew for each failure. Due to the limited availability of specialist tools, equipment and spare parts on board and recognizing the additional dangers associated with space limitations, the remoteness of specialized medical help and facilities in the event of emergencies, it is desirable that, as far as practicable, the crew shall not exposed to dangers that could be avoided. For these reasons it is preferable that the vessel's HV electrical system be designed such that the crew can safely isolate any damaged distribution equipment and switch

to alternative supplies without the need to open the HV equipment.

5.1.7.3 Activities

For all HV switchboards and distribution boards, each type of operation or activity shall be identified and the means of undertaking the operation or activity safely shall be established. The operations and activities to be considered are to include the following:

i) Taking readings

ii) Normal operational switching

iii) Isolation and making safe

iv) Maintenance

v) Fault finding

vi) Inspection

vii) Class Surveys

Where switchgear design calls for circuit breakers to be inspected prior to being put back into service following operation on overcurrent, this should also be covered.

5.1.7.4 Accessibility

An adequate, unobstructed working space of at least 2 m (6 ft) shall be left in the vicinity of high voltage equipment for preventing potential severe injuries to personal performing maintenance activities. Where the clear space around a location where activity is taking place is less than 2 m (6 ft), then the activities shall be covered in sufficient detail to take into account the work involved and the possible need to have clear and safe access for emergency medical evacuation. Where recommended by the switchgear manufacturer, the working space may be reduced to a minimum of 1.5 m (5 ft) due to special considerations such as the use of arc resistant switchgear.

Activities that do not require operation at the switchboard (e.g., telephones or manual call points) should not require the operator to be within 2 m (6 ft) of the switchboard.

5.1.7.5 Modifications

No modifications shall be made to HV switchgear without the plans being approved and the drawings being made available to the INTLREG Surveyor in advance of the work taking place. Testing of approved modifications shall be conducted in the presence of the INTLREG Surveyor. Temporary repairs shall be in full compliance with the requirements of these Rules.

5.1.7.6 HV Systems with Enhanced Operating Redundancy

Where the HV electrical system is designed with sufficient redundancy to allow switching and isolation along the principles in Chapter 6 Sect 5 [5.1.7.2] and still meet the requirements of Chapter 6-Sect 2[2.2.1.2] with one generator in reserve, then the activity associated with that failure shall not required to be included.

5.1.8 Preliminary Operations Manual

5.1.8.1 Objective

The preliminary operations manual contains the shipyard's description of operations affecting the vessel's HV equipment. The description 'preliminary' is used to capture

the fact that it may not be the final document used by the vessel's Owner.

The manual shall be complete and sufficiently detailed to capture each piece of HV equipment and how the activities associated with that equipment can be achieved consistently with the Design Operating Philosophy. This manual shall be made available to the Owner by the shipyard.

The Owner will need the information contained in the preliminary operations manual to understand how the shipyard designed the HV equipment to be operated safely. It is likely that the Owner will modify some aspects of the manual to bring it in line with their own company policies, organizational responsibilities and legal duties.

The preliminary operations manual is to include for each piece of HV equipment:

i) Details of the tasks (operations and activities) associated with that piece of equipment

ii) Details of the 'Authorization' needed to perform each of the tasks

iii) Details of the tools required to perform each of the tasks

iv) Details of PPE and safety equipment (locks, barriers, tags, rescue hooks, etc.)

v) Identify the tasks for which a 'permit to work' system shall be used.

5.1.8.2 Details of Authorization

For each operation or task involving HV switchgear and for access to the HV switchgear rooms, the appropriate authorizations shall be determined before delivery.

5.1.8.3 Training Requirements for Authorization

Part of the basis of establishing any level of authorization is training. It shall not expected that the shipyard will stipulate what training qualifications are required. However, a description of the subjects that would need to be covered in the training for each level of authorization should be included.

The Owner can be guided by the above information in making decisions regarding the crew training requirements.

5.1.8.4 Test, Maintenance Tools and PPE

Where tasks require the use of PPE, the required protection clothing rating should be identifiable in the preliminary operations manual and on a label on the HV equipment where that task will take place. The level of protection offered by the PPE shall be readily identified on the PPE itself in the same terms or units as used on the labels.

Some PPE for general use shall not suitable for High Voltage or arc flash hazards, mostly through inappropriate fire performance; such PPE shall be excluded from high voltage switchgear rooms. Information alerting the crew of the need to be able to recognize and use the right PPE shall be included in the manual.

5.1.8.5 Inspection and Maintenance of Test Equipment Tools and PPE

Where PPE or test equipment is provided by the shipyard the means for its proper use, inspection, calibration and maintenance shall be made available. The instructions or directions regarding where they are kept shall be contained in the Preliminary Operations Manual.

Where the PPE shall not provided by the shipyard a description or specification regarding the required tools and PPE should be provided in the Preliminary Operations

Manual.

5.2 Electric Propulsion System

5.2.1 General

5.2.1.1 Application

The following requirements in this subsection are applicable to electric propulsion systems. Electric propulsion systems complying with other recognized standards will also be applicable and considered acceptable. Unless stated otherwise, electric propulsion equipment and systems are to comply with the applicable requirements in other parts of Part 5B, Chapter 6, as well.

5.2.1.2 Plans and Data to be Submitted

In addition to the plans and data to be submitted in accordance with Chapter 6 Sect 2[2.1], Chapter 6 Sect 3[3.1] ,Chapter 6 Sect 4[4.1]the following plans and data shall be submitted for review.

- One-line diagrams of the propulsion control system for power supply, circuit protection, alarm, monitoring, safety and emergency shutdown systems, including list of alarm and monitoring points.
- Plans showing the location of the propulsion controls and its monitoring stations.
- Arrangements and details of the propulsion control console or panel, including schematic diagram of the system therein.
- Arrangements and details of electric coupling.
- Arrangements and details of the semiconductor converters enclosure for the propulsion system, including data for the semiconductor converter and cooling system with its interlocking arrangement.

5.2.2 System Design

5.2.2.1 General

For the purposes of the electric propulsion system requirements, an electric propulsion system is one in which the main propulsion of the vessel is provided by at least one electric motor. A vessel may have more than one electrical propulsion system.

An integrated electric propulsion system is a system where a common set of generators supply power to the vessel service loads as well as the propulsion loads.

In the case of an integrated electrical propulsion system, the electrical drive train is considered to consist of the equipment connected to the electrical network such as a drive (frequency converter) and the propulsion motor(s).

All electrical equipment that is part of the electric propulsion drive train shall be built with redundancy such that a single failure will not completely disable the propulsion of the vessel. Where electric motors are to provide the sole means of propulsion for a vessel, a single propulsion motor with dual windings does not meet this requirement.

5.2.2.2 Generating Capacity

For vessels with an integrated electric propulsion system, under normal sea-going conditions, when one generator is out of service, the remaining generator capacity shall be sufficient to carry all of the vessel services (essential services, normal services and for minimum comfortable conditions of habitability) and an effective level

of propulsion.

5.2.2.3 Power Management System

For vessels with an integrated electric propulsion system, a power management system shall be provided. The power management system is to control load sharing between generators, prevent blackouts, maintain power to the essential service loads and maintain power to the propulsion loads.

The system is to account for the following operating scenarios.

- All generators in operation, then the loss of one generator
- When at least one generator shall not in operation and there is an increase in the propulsion loads or a loss of one of the generators, that would result in the need to start a generator that was not in operation.
- Upon failure of the power management system, there shall be no change in the available electrical power. Failure of the power management system shall be alarmed at a manned control station.

Further, the system is to prevent overloading the generators, by reducing the propulsion load or load shedding of non-essential loads. In general, the system is to limit power to the propulsion loads to maintain power to the vessel's essential service loads. However, the system is to shed non-essential loads to maintain power to the propulsion loads.

An audible and visible alarm shall be installed at each propulsion control location and shall be activated when the system is limiting the propulsion power in order to maintain power to the other essential service loads.

When at least one generator shall not in operation, consideration should be given to keeping one generator in standby mode, so that it can be brought on line within 45 seconds, upon failure of one of the running generators.

Operation with only one generator on line should only be considered, when another generator can be brought on line within 45 seconds of failure of the running generator.

5.2.2.4 Regenerative Power

For systems where regenerative power may be developed, the regenerative power shall not to cause over speeding of the prime mover or variations in the system voltage and frequency which exceeds the limits of Chapter 6 Sect 1[1.6] Chapter 6 Sect 5[5.2.9.4](a)and Chapter 6 Sect 5[5.2.9.4](e)

5.2.2.5 Harmonics

A harmonic distortion calculation shall be submitted for review for all vessels with electric propulsion. The calculation is to indicate that the harmonic distortion levels at all locations throughout the power distribution system (main generation switchboard, downstream power distribution switchboards, etc.) are within the limits of Chapter 6 Sect 2[2.4.5] The harmonic distortion levels at dedicated propulsion buses are also to be within the limits of,Chapter 6 Sect 2[2.5.10] otherwise documentation from the manufacturer shall be submitted indicating that the equipment is designed for operation at a higher level of distortion.

Where higher values of harmonic distortion are expected, any other possible effects, such as additional heat losses in machines, network resonances, errors in control and monitoring systems shall be considered.

Means of monitoring voltage harmonic distortion shall be provided, including alarms at the main generation switchboard and at continuously manned stations when to notify of an increase in total or individual harmonic distortion levels above the maximum allowable levels.

Harmonic filters, if used, are to comply with requirements mentioned in Chapter 6 Sect 2[2.5.10]

5.2.3 Propulsion Power Supply Systems

5.2.3.1 Propulsion Generators

5.2.3.1(a) Power Supply. The power for the propulsion equipment may be derived from a single generator. If a ship service generator is also used for propulsion purposes other than for boosting the propulsion power, such generator and power supply circuits to propulsion systems are also to comply with the applicable requirements in this subsection. Refer also Chapter 6 Sect 2[2.2.1.4]

5.2.3.1(b) Single System. If a propulsion system contains only one generator and one motor and cannot be connected to another propulsion system, more than one exciter set shall be provided for each machine. However, this shall not necessary for self-excited generators or for multi-propeller propulsion vessels where any additional exciter set may be common for the vessel.

5.2.3.1(c) Multiple Systems. Systems having two or more propulsion generators, two or more semiconductor converters or two or more motors on one propeller shaft shall be so arranged that any unit may be taken out of service and disconnected electrically without preventing the operation of the remaining units.

5.2.3.1(d) Excitation Systems. Arrangements for electric propulsion generators shall be such that propulsion can be maintained in case of failure of an excitation system or failure of a power supply for an excitation system. Propulsion may be at reduced power under such conditions where two or more propulsion generators are installed, provided such reduced power is sufficient to provide for a speed of not less than 7 knots or $^1/_2$ of design speed, whichever is the lesser

5.2.3.1(e) Features for Other Services. If the propulsion generator is used for other purposes than for propulsion, such as dredging, cargo oil pumps and other special services, overload protection in the auxiliary circuit and means for making voltage adjustments shall be provided at the control board. When propulsion alternating-current generators are used for other services for operation in port, the port excitation control shall be provided with a device that is to operate just below normal idling speed of the generator to remove excitation automatically.

5.2.3.2 Propulsion Excitation

5.2.3.2(a) Excitation Circuits. Every exciter set shall be supplied by a separate feeder. Excitation circuits are not to be fitted with overload circuit-interrupting devices, except those intended to function in connection with the protection for the propulsion generator. In such cases, the field circuit breaker shall be provided with a discharge resistor, unless a permanent discharge resistor is provided.

5.2.3.2(b) Field Circuits. Field circuits shall be provided with means for suppressing voltage rise when a field switch is opened. Where fuses are used for excitation circuit protection, it is essential that they do not interrupt the field discharge resistor circuit

upon rupturing.

5.2.3.2(c) Ship's Service Generator Connection. Where the excitation supply is obtained from the ship's service generators, the connection shall be made to the generator side of the generator circuit breaker with the excitation supply passing through the overload current device of the breaker.

5.2.4 Circuit Protection

5.2.4.1 Setting

Overcurrent protective devices, if any, in the main circuits shall be set sufficiently high so as not to operate on over currents caused by maneuvering or normal operation in heavy seas or in floating broken ice.

5.2.4.2 Direct-current (DC) Propulsion Circuits

5.2.4.2(a) Circuit Protection. Direct-current propulsion circuits are not to have fuses. Each circuit shall be protected by overload relays to open the field circuits or by remote-controlled main-circuit interrupting devices. Provision shall be made for closing circuit breakers promptly after opening.

5.3.7.2(b) Protection for Reversal of the Rotation. Where separately driven DC generators are connected electrically in series, means shall be provided to prevent reversal of the rotation of a generator upon failure of the driving power of its prime mover.

5.2.4.3 Excitation Circuits

An overload protection shall not to be provided for opening of the excitation circuit.

5.2.4.4 Reduction of Magnetic Fluxes

Means shall be provided for selective tripping or rapid reduction of the magnetic fluxes of the generators and motors so that over currents do not reach values which may endanger the plant.

5.2.4.5 Direct-current (DC) Propulsion Motors Supplied by Semiconductor Converters

The protection features of the semiconductor converters shall be arranged to avoid a damaging flashover in the DC propulsion motor. A possible cause of a damaging flashover would be removal of the field current. The protection features of the semiconductor converters are to take into account the increase in armature current created by the removal of the field current, due to accidental loss of the field, or activation of a protection feature intended to protect the field.

To verify compliance with the above, the maximum time-current characteristics that can be commutated by the motor as well as the time-current characteristics of the protective features of the semiconductor converters shall be submitted for review. To avoid a damaging flashover, the maximum time-current characteristics of the motor shall be provided by the motor manufacturer and shall be used by the semiconductor converter manufacturer to determine the appropriate set points for the protection features of the semiconductor converters.

5.2.5 Protection for Earth Leakage

5.2.5.1 Main Propulsion Circuits

Means for earth leakage detection shall be provided for the main propulsion circuit and be arranged to operate an alarm upon the occurrence of an earth fault. When the fault current flowing is liable to cause damage, arrangements for opening the main

propulsion circuit are also to be provided.

5.2.5.2 Excitation Circuits

Means shall be provided for earth leakage detection in excitation circuits of propulsion machines but may be omitted in circuits of brushless excitation systems and of machines rated up to 500 kW.

5.2.5.3 Alternating current (AC) Systems

Alternating current propulsion circuits shall be provided with an earthing detector alarm or indicator. If the neutral is earthed for this purpose, it shall be through an arrangement which will limit the current at full-rated voltage so that it will not exceed approximately 20 Amperes upon a fault to earth in the propulsion system. An unbalance relay shall be provided which is to open the generator and motor-field circuits upon the occurrence of an appreciable unbalanced fault.

5.2.5.4 Direct-current (DC) Systems

The earthing detector may consist of a voltmeter or lights. Provision shall be made for protection against severe overloads, excessive currents and electrical faults likely to result in damage to the plant. Protective equipment shall be capable of being so set as not to operate on the overloads or overcurrents experienced in a heavy seaway or when maneuvering.

5.2.6 Electric Propulsion Control

5.2.6.1 General

Failure of a control signal shall not to cause an excessive increase in propeller speed. The reference value transmitters in the control stations and the control equipment shall be so designed that any defect in the desired value transmitters or in the cables between the control station and the propulsion system will not cause a substantial increase in the propeller speed.

5.2.6.2 Automatic and Remote Control Systems

Where two or more control stations are provided outside of the engine room, or where automatic control of the propulsion machinery is provided, Sections

5.2.6.3 Testing and Inspection

Controls for electric propulsion equipment shall be inspected when finished and dielectric strength tests and insulation resistance measurements made on the various circuits in the presence of the Surveyor, preferably at the plant of manufacture. The satisfactory tripping and operation of all relays, contactors and the various safety devices are also to be demonstrated.

5.2.6.4 Initiation of Control

The control of the propulsion system can be activated only when the delegated control lever is in zero position and the system is ready for operation.

5.2.6.5 Emergency Stop

Each control station shall have an emergency stop device which is independent of the control lever.

5.2.6.6 Prime Mover Control

Where required by the system of control, means shall be provided at the control

assembly for controlling the prime mover speed and for mechanically tripping the throttle valve.

5.2.6.7 Control Power Failure

If failure of the power supply occurs in systems with power-aided control (e.g., with electric, pneumatic or hydraulic aid), it shall be possible to restore control in a short time.

5.2.6.8 Protection

Arrangements shall be made so that opening of the control system assemblies or compartments will not cause inadvertent or automatic loss of propulsion. Where oil gauges are mounted on the main-control assembly, provision shall be made so that the oil will not come in contact with the energized parts in case of leakage.

5.2.6.9 Interlock arrangements

All levers for operating contactors, line switches, field switches and similar devices shall be interlocked to prevent their improper operation. Interlocks shall be provided with the field lever to prevent the opening of any main circuit without first reducing the field excitation to zero, except that when the generators simultaneously supply power to an auxiliary load apart from the propulsion, the field excitation need only be reduced to a low value.

5.2.7 Instrumentation at the Control Station

5.2.7.1 Indication, Display and Alarms

The necessary instruments to indicate existing conditions at all times shall be provided and mounted on the control panel convenient to the operating levers and switches. Instruments and other devices mounted on the switchboard shall be labeled and the instruments provided with a distinguishing mark to indicate full-load conditions. Metallic cases of all permanently installed instruments shall be permanently earthed. The following instruments, where applicable, shall be provided.

5.2.7.1(a) For AC Systems. Ammeter, voltmeter, indicating wattmeter and field ammeter (*) for each propulsion generator and for each synchronous motor. Refer Chapter 7 Sect 4/Table 7.4.6 A

A temperature indicator for each generator and propulsion motor, the indicator is to read stator Winding and cooling system temperature.

5.2.7.1(b) For DC Systems. An ammeter for each main circuit and one or more voltmeters with selector switches for reading voltage on each propulsion generator and motor. Refer Chapter 7 Sect 4/Table 7.4.6 A

5.2.7.1(c) For Electric Slip Couplings. An ammeter for the coupling excitation circuit.

* Field ammeter shall not required for brushless generators

5.2.7.2 Indication of Propulsion System Status

The control stations of the propulsion systems are to have at least the following indications for each propeller.

5.2.7.2(a) "Ready for Operation". Power circuits and necessary auxiliaries are in operation.

5.2.7.2(b) "Faulty". Propeller shall not controllable.

5.2.7.2(c) "Power Limitation". In case of disturbance, for example, in the ventilators for

propulsion motors, in the converters, cooling water supply or load limitation of the generators.

5.2.8 Equipment Installation and Arrangement

5.2.8.1 General

The arrangement of bus bars and wiring on the back of propulsion-control assemblies shall be such that all parts, including the connections, are accessible. All nuts and connections shall be fitted with locking devices to prevent loosening due to vibration. Clearance and creepage distance shall be provided between parts of opposite polarity and between live parts and earth to prevent arcing. Refer Chapter 6 Sect1 [1.11], Chapter 6 Sect4 [4.4.6.5], Chapter 6 Sect 5[5.1.6.2](b)

5.2.8.2 Accessibility and Facilities for Repairs

5.2.8.2(a) Accessibility. For purposes of inspection and repair, provision shall be made for access to the stator and rotor coils, and for the withdrawal and replacement of field coils. Adequate access shall be provided to permit resurfacing of commutators and slip-rings, as well as the renewal and bedding of brushes.

5.2.8.2(b) Facility for Supporting. Facilities shall be provided for supporting the shaft to permit inspection and withdrawal of bearings.

5.2.8.2(c) Slip-couplings. Slip-couplings shall be designed to permit removal as a unit without axial displacement of the driving and driven shaft, and without removing the poles.

5.2.8.3 Propulsion Cables

Propulsion cables are not to have splices or joints, except terminal joints, and all cable terminals shall be sealed against the admission of moisture or air. Similar precautions shall be taken during installation by sealing all cable ends until the terminals are permanently attached. Cable supports shall be designed to withstand short-circuited conditions. They shall be spaced less than 915 mm (36 in.) apart and shall be arranged to prevent chafing of the cable. Refer Chapter 6 Sect 3[3.3.6.1]

5.2.9 Machinery and Equipment

5.2.9.1 Material Tests

The following materials intended for main propulsion installation shall be tested in presence of a Surveyor; thrust shafts, line shafts, propeller shafts, shafting for propulsion generators and motors, coupling bolts, and in the case of direct-connected turbine-driven propulsion generators, fan shrouds, centering and retaining rings. Major castings or built-up parts such as frames, spiders and end shields shall be surface inspected and the welding shall be in accordance with the INTLREG *Rules for Materials and Welding (Part 2)*.

5.2.9.2 Temperature Rating

When generators, motors or slip-couplings for electric propulsion are fitted with an integral fan and will be operated at speeds below the rated speed with full-load torque, full-load current or full-load excitation temperature rise limits according to Chapter 6 Sect 3 /Table 6.4.3 are not to be exceeded.

5.2.9.3 Protection Against Moisture Condensation

Chapter 6 Sect [4.2.7.7] is applicable for rotating machines and converters, regardless of the weight of the machines.

5.2.9.4 Prime Movers

5.2.9.4(a) Capability. The prime mover rated output is to have adequate overloading and build-up capacity for supplying the power which is necessary during transitional changes in operating conditions of the electrical equipment. When maneuvering from full propeller speed ahead to full propeller speed astern with the vessel making full way ahead, the prime mover is be capable of absorbing a proportion of the regenerated power without tripping due to over speed.

5.2.9.4(b) Speed Control. Prime movers of any type shall be provided with a governor capable of maintaining the preset steady speed within a range not exceeding 5% of the rated full-load speed for load changes from full-load to no-load.

5.2.9.4(c) Manual Controls. Where the speed control of the propeller requires speed variation of the prime mover, the governor shall be provided with means for local manual control, as well as for remote control. For turbines driving AC propulsion generators, where required by the system of control, the governor shall be provided with means for local hand control, as well as remote adjustment from the control station.

5.2.9.4(d) Parallel Operation. In case of parallel operation of generators, the governing system is to permit stable operation to be maintained over the entire operational speed range of the prime movers.

5.2.9.4(e) Protection for Regenerated Power. Braking resistors or ballast consumers shall be provided to absorb excess amounts of regenerated energy and to reduce the speed of rotation of the propulsion motor. These braking resistors or ballast consumers shall be located external to the mechanical and electric rotating machines. Alternatively, the amount of regenerated power may be limited by the action of the control system.

5.2.9.5 Rotating Machines for Propulsion

The following requirements are applicable to propulsion generators and propulsion motors.

5.2.9.5(a) Ventilation and Protection. Electric rotating machines for propulsion shall be enclosed ventilated or be provided with substantial wire or mesh screen to prevent personnel injury or entrance of foreign matter. Dampers shall be provided in ventilating air ducts, except when re-circulating systems are used.

5.2.9.5(b) Fire-extinguishing Systems. Electric rotating machines for propulsion which are enclosed or in which the air gap shall not directly exposed shall be fitted with fire-extinguishing systems suitable for fires in electrical equipment. This will not be required where it can be established that the machinery and insulation is self-extinguishing.

5.2.9.5(c) Air Coolers - Air cooling systems for propulsion generators shall be in accordance with Chapter 2 Sect 1[1.6.2] and Chapter 2 Sect 1[1.6.4] Water-air heat exchangers of rotating propulsion machines for single systems (single generator and single motor), as specified in Chapter 6 Sect 5[5,2,3,1](b) are to have double wall tubes and be fitted with a leak detector feature to monitor for any water leakage. A visual and audible alarm shall be provided at a normally manned location to indicate such water leakage.

5.2.9.5(d) Temperature Sensors - Stator windings of AC machines and interpole windings of DC machines rated above 500 kW shall be provided with temperature sensors. Refer . Chapter 7 Sect 4/Table 7.4.6

5.2.9.5(e) Generator Excitation Excitation current for propulsion generators may be derived from attached rotating exciters, static exciters, excitation motor-generator sets or special purpose generating units. Power for these exciters may be derived from the machine being excited or from any ship service, emergency or special purpose generating units.

5.2.9.5(f) Propulsion Motors - Propulsion motors shall be designed to be capable of withstanding the mechanical and thermal effects of a short-circuit at its terminals.

5.2.9.6 Direct-current (DC) Propulsion Motors

5.2.9.6(a) Rotors. The rotors of DC propulsion motors shall be capable of withstanding over speeding up to the limit reached in accordance with the characteristics of the over speed protection device at its normal operational setting.

5.2.9.6(b) Over speed Protection. An over speed protection device shall be provided to prevent excessive over speeding of the propulsion motors due to light loads, loss of propeller, etc.

5.2.9.7 Electric Couplings

5.2.9.7(a) General. Couplings shall be enclosed ventilated or be provided with wire or mesh screen to prevent personnel injury or the entrance of foreign material. All windings shall be specially treated to resist moisture, oil and salt air.

5.2.9.7(b) Accessibility for Repairs. The coupling shall be designed to permit removal as a unit without moving the engine. Refer also Chapter 6 Sect 5[5.2.8.2]

5.2.9.7(c) Temperature Rating. The limits of temperature rise shall be the same as for alternating-current generators given in Chapter 6 Sect 4/Table 6.4.3 except that when a squirrel-cage element is used, the temperature of this element may reach such values as are not injurious. Depending upon the cooling arrangements, the maximum temperature rise may occur at other than full-load rating so that heat runs will require special consideration. For this purpose, when an integral fan is fitted, the coupling temperatures are not to exceed the limits in Chapter 6 Sect 4,Table 6.4.3, when operated continuously at 70% of full-load rpm, full excitation and rated torque. Temperature rises for insulation materials above 180°C (356°F) will be considered in accordance a recognized standard

5.2.9.7(d) Excitation. Excitation shall be provided as required for propulsion generators. Refer Chapter 6 Sections 4[4.2.11.1], [4.2.12.1] and Sect 5[5.2.9.5](e)

5.2.9.7(e) Control Equipment. Electric-coupling control equipment shall be combined with the prime mover speed and reversing control and is to include a two-pole disconnect switch, short-circuit protection only, ammeter for reading coupling current, discharge resistor and interlocking to prevent energizing the coupling when the prime mover control levers are in an inappropriate position.

5.2.9.7(f) Nameplates. Nameplates of corrosion-resistant material shall be provided in an accessible position of the electric coupling and are to contain the following typical details:

- Manufacturer's name, serial number and frame designation
- Rated output and type of rating

- Ambient temperature range
- Rated voltage, speed and temperature rise
- Rated exciter voltage and current

5.2.9.8 Semiconductor Converters for Propulsion

Semiconductor converters are to comply with the requirements in Chapter 6 Sect 4[4.6]

5.2.9.9 Reactors and Transformers for Semiconductor Converters

5.2.9.9(a) General. Interphase reactors and transformers used with semiconductor converters are to conform with the requirements of, Chapter 6 Sect 4[4.5.1.1], Chapter 6 Sect 4[4.5.1.2], Chapter 6 Sect 4[4.5.2], Chapter 6 Sect 4[4.5.3.1], Chapter 6 Sect 4[4.5.3.2], and the following

5.2.9.9(b) Voltage Regulation. Means to regulate transformer output voltage shall be provided to take care of increase in converter forward resistance and, in addition, to obtain the necessary performance characteristics of the converter unit in which the transformer is used.

5.2.9.9(c) High Temperature Alarm. Interphase reactors and transformers used with the semiconductor converters for main and auxiliary propulsion systems shall be provided with high temperature alarm at the switchboard or the propulsion control station. The setting value of the alarm shall be determined by their specific insulation class and shall not to exceed the temperature corresponding to the limit listed in Chapter 6 Sect 4 /Table 6.4.8

5.2.9.10 Switches

5.2.9.10(a) General Design. All switches shall be arranged for manual operation and so designed that they will not open under ordinary shock or vibration. Contactors, however, may be operated pneumatically, by solenoids or other means in addition to the manual method which shall be provided, unless otherwise approved.

5.2.9.10(b) Generator and Motor Switches. Switches for generators and motors are preferably to be of the air-break type, but for alternating-current systems, where they shall be designed to open full-load current at full voltage, oil-break switches using nonflammable liquid may be used if provided with leak-proof, non-spilling tanks.

5.2.9.10(c) Field Switches. Where necessary, field switches shall be arranged for discharge resistors unless discharge resistors are permanently connected across the field. For alternating-current systems, means shall be provided for de-energizing the excitation circuits by the unbalance relay and ground relay.

5.2.9.11 Propulsion Cables

5.2.9.11(a) Conductors. The conductors of cables external to the components of the propulsion plant, other than cables and interconnecting wiring for computers, data loggers or other automation equipment requiring currents of very small value, are to consist of not less than seven strands and have a cross-sectional area of not less than 1.5 mm^2 (2,960 circ. mils).

5.2.9.11(b) Insulation Materials. Ethylene-propylene rubber, cross-linked polyethylene or silicone rubber insulated cables shall be used for propulsion power cables, except that polyvinyl chloride insulated cables may be used where the normal ambient temperature will not exceed 50°C (122°F).

5.2.9.11(c) Braided Metallic Armor and Impervious Metallic Sheaths - Propulsion cables need not have braided metallic armor nor impervious metallic sheaths. Where metallic sheaths are provided, they are not to be used with single alternating current cables.

5.2.9.11(d) Inner Wiring. The insulation of internal wiring in main control gear, including switchboard wiring, shall be of flame-retardant quality.

5.2.9.11(e) Testing. All propulsion cables, other than internal wiring in control gears and switchboards, shall be subjected to dielectric and insulation tests in the presence of the Surveyor.

5.2.10 Dock and Sea Trials

Complete tests of the entire electric propulsion system shall be carried out during sea-trials including the following:

i) Duration runs with the ship at full propulsion load.

ii) Maneuvering tests which should include a reversal of the vessel from full speed ahead to full speed astern during which important measurements such as system currents, voltages, speed, etc. shall be recorded.

iii) Tests to check for operation of all protective devices, safety functions, alarms, indicators, control modes and stability tests for control.

All tests necessary to demonstrate that major components of the electric propulsion plant and the system as a whole are satisfactory for duty shall be performed. Immediately prior to trials, the insulation resistance shall be measured and recorded.

Propulsion equipment is to be tested under working conditions and operated in the presence of the Surveyors and to their satisfaction. The equipment is to have sufficient power for going astern to secure proper control of the ship in all normal circumstances. In passenger ships the ability of the machinery to reverse the direction of thrust of the propeller in sufficient time, under normal maneuvering conditions, and so bring the ship to rest from maximum ahead service speed, is to be demonstrated at the sea tria

5.3 Three-wire Dual-voltage DC System

5.3.1 Three-wire DC Ship's Generators

Separate circuit-breaker poles shall be provided for the positive, negative, neutral and also for the equalizer leads, unless protection is provided by the main poles. When equalizer poles are provided for the three- wire generators, the overload trips shall be of the algebraic type. No overload trip shall be provided for the neutral pole, but it is to operate simultaneously with the main poles. A neutral overcurrent relay and alarm system shall be provided and set to function at a current value equal to the neutral rating.

5.3.2 Neutral Earthing

5.3.2.1 Main Switchboard

The neutral of three-wire dual-voltage direct-current systems shall be solidly earthed at the generator switchboard with a zero-center ammeter in the earthing connection. The zero-center ammeter is to have a full-scale reading of 150% of the neutral-current rating of the largest generator and be marked to indicate the polarity of earth. The earth connection shall be made in such a manner that it will not prevent checking the insulation resistance of the generator to earth before the generator is connected to the bus. The neutrals of three-wire DC emergency power systems shall be earthed at all times when they are supplied from the emergency generator or storage battery.

The earthed neutral conductor of a three-wire feeder shall be provided with a means for disconnecting and shall be arranged so that the earthed conductor cannot be opened without simultaneously opening the unearthed conductors.

5.3.2.2 Emergency Switchboard

No direct earth connection shall be provided at the emergency switchboard. The neutral bus or buses shall be solidly and permanently connected to the neutral bus of the main switchboard. No interrupting device shall be provided in the neutral conductor of the bus-tie feeder connecting the two switchboards.

5.3.3 Size of Neutral Conductor

The capacity of the neutral conductor of a dual-voltage feeder shall be 100% of the capacity of the unearthed conductors.

5.4 Electrical Plants of Less Than 100 kW Part 6/Chapter 4

5.4.1 General

Electrical plants having an aggregate capacity of less than 100 kW are to comply with the following requirements and the requirements in Chapter 6 as applicable –except Chapter 6 Sect 1[1.10], Chapter 6 Sect 2[2.1.2] , Chapter 6 Sect 2[2.1.3, Chapter 6 Sect 2[2.2], Chapter 6 Sect 2[2.3], Chapter 6 Sect 2[2.4.1.6] (b),Chapter 6 Sect 2[2.5.1.6], Chapter 6 Sect 2[2.6.3], Chapter 6 Sect 2[2.6.4], Chapter 6 Sect 2[2.7.2] ,Chapter 6 Sect 2[2.8] Chapter 6 Sect 2[2.9.1], Chapter 6 Sect 2[2.9.2],Chapter 6 Sect 2[2.10.2], Chapter 6 Sect 3[3.1.1], Chapter 6 Sect 3[3.2.5], Chapter 6 Sect 4[4.4.8.2],Chapter 6 Sect 3[3.8],Chapter 6 Sect 5[5.1.]

5.4.2 Standard Details

Standard wiring practices and details, including such items as cable supports, earthing details, bulkhead and deck penetrations, cable joints and sealing, cable splicing, watertight and explosion-proof connections to equipment, earthing and bonding connections, etc., as applicable, shall be indicated on the submitted plans or may be submitted in a booklet format.

5.4.3 Calculations of Short-circuit Currents

In the absence of precise data, the following short circuit currents at the machine terminals shall be assumed:

5.4.3.1 Direct Current System

Ten times the full load current for generators normally connected (including spare) for each generator capable of being simultaneously connected.

Six times full load current for motors simultaneously in service.

5.4.3.2 Alternating Current System

Ten times the full load current for generators normally connected (including spare) for each generator capable of being simultaneously connected-symmetrical rms.

Three times full load current of motors simultaneously in service.

5.4.4 Lightning Protection

A lightning-protection system consisting of a copper spike and a copper conductor of at least 8 mm^2 (No. 8 AWC) shall be installed on each nonmetallic mast. The spike is to project at least 150 mm (6 in.) above the uppermost part of the vessel, the conductor is to run clear of metal objects and as straight as practicable to the metallic steel structure of the vessel.

5.4.5 Temperature Ratings

In the requirements contained in Chapter 6 Sect 5[5.4] , an ambient temperature of 40°C (140°F) has been assumed for all locations. Where the ambient temperature is in excess of this value, the total temperature specified shall not to be exceeded. Where equipment has been rated on ambient temperature less than that contemplated, consideration will be given to the use of such equipment, provided the total temperature for which the equipment is rated will not be exceeded.

5.4.6 Generators

Vessels using electricity for propulsion auxiliaries or preservation of cargo shall be provided with at least two generators. These generators are not to be driven by the same engine. The capacity of the generating sets shall be sufficient to carry the necessary load essential for the propulsion and safety of the vessel and preservation of the cargo (if applicable) with any one generator set in reserve. Vessels having only one generator shall be provided with a battery source to supply sufficient lighting for safety.

5.4.7 Emergency Source of Power

5.4.7.1 Capacity

The emergency source of electrical power is to have adequate capacity to provide emergency lighting for a period of at least six hours.

5.4.7.2 Sources

The emergency power source may be any of the following:

i) An automatically connected or manually controlled storage battery; or

ii) An automatically or manually started generator; or

iii) Relay-controlled, battery-operated lanterns.

5.4.7.3 Battery Sources

Where the source of electrical power is a battery connected to a charging device with an output of more than 2 kW, the battery shall be located as near as practicable to, but not in the same space as, the emergency switchboard, distribution board or panel.

5.4.8 Cable Construction

Cables are to have copper conductors constructed in accordance with a recognized standard and shall be of the stranded type, except sizes not exceeding 1.5 mm^2 (16 AWG) may have solid conductors.

5.4.9 Switchboards, Distribution Boards and Panels

5.4.9.1 Installation

Switchboards, distribution box panels and panels shall be installed in dry, accessible and well- ventilated areas. Not less than 610 mm (24 in.) clearance shall be provided in front of switchboards, distribution box panels and panels. When located at the helm or other area adjacent to or part of an open cockpit or weather deck, they shall be protected by a watertight enclosure.

5.4.9.2 Instrumentation

A voltmeter, ammeter, frequency meter and voltage regulator shall be provided for each generator installed. Control equipment and measuring instruments shall be provided as necessary to insure satisfactory operation of the generator or generators.

5.4.10 Navigation Running Lights

Mast head, port, starboard and stem lights, when required, shall be controlled by a running light indicator panel. A fused-feeder disconnect switch shall be provided. The rating of the fuses shall be at least twice that of the largest branch fuse and greater than the maximum panel load.

TABLE 6.5.1

High Voltage Equipment Locations and Minimum Degree of Protection

Example of Location	Condition of Location	Switchboards, Distribution Boards, Motor Control Centers and Controllers	Generators	Motors	Transformers, Converters	Junction/Connection Boxes
Dry control rooms Authorized Personnel Only	Danger of touching live parts only	IP32	N/A	N/A	IP23	IP44
Dry control rooms		IP42	N/A	N/A	IP44	IP44
Control rooms Authorized Personnel Only	Danger of dripping liquid and/or moderate mechanical damage	IP32	N/A	N/A	IP23	IP44
Control Rooms		IP42	N/A	N/A	IP44	IP44
Above floor plates in machinery spaces Authorized Personnel Only (1)		IP32	IP23	IP23	IP23	IP44
Above floor plates in machinery spaces		IP42	IP23	IP43	IP44	IP44
Emergency machinery rooms Authorized Personnel Only		IP32	IP23	IP23	IP23	IP44
Emergency machinery rooms		IP42	IP23	IP43	IP44	IP44
Below floor plates in machinery spaces Authorized Personnel Only	Increased danger of liquid and/or mechanical damage	N/A	N/A	*	*	IP44
Below floor plates in machinery spaces		N/A	N/A	*	N/A	IP44
Ballast pump rooms Authorized Personnel Only	Increased danger of liquid and mechanical damage	IP44	N/A	IP44	IP44	IP44
Ballast pump rooms		IP44	N/A	IP44	IP44	IP44
Holds for general cargo	Danger of liquid spray presence of cargo dust, serious mechanical damage, and/or aggressive fumes	*	*	*	*	IP55

Open decks (2)	Not exposed to seas	N/A	IP56	IP56	IP56	IP56
Open decks (2)	Exposed to seas	N/A	N/A	*	*	*

"*" indicates that equipment in excess of 1000 V shall not normally permitted in these locations

Notes:

1 Refer Chapter 6 Sect 3[3.2.1.1] where the equipment is located within areas affected by local fixed pressure water-spraying or water-mist fire extinguishing systems

2 For High Voltage Shore Connections (HVSC) Refer the requirements in the INTLREG *Guide for High Voltage Shore Connection*

3 Where the IP rating of the high voltage electrical equipment has been selected on the basis that it is only accessible to authorized personnel, the entrance doors to the spaces in which such equipment is located, shall be marked accordingly.

SECTION 6 SPECIALIZED VESSELS AND SERVICES

Contents

6.1 Oil Carriers

6.1.1 Application

i. In addition to the foregoing requirements of this Section, the following requirements are applicable to vessels carrying oil having a flash point not exceeding 60°C (140°F).

a. *Note:* The electric installation on bulk-oil vessels carrying oil having a flash point above 60°C (140°F), closed-cup test, will be subject to special consideration and Part 6- Chapter 3-Sect 6[6.14] in each case.

ii. Oil carriers subject to SOLAS are to comply with the requirements of IEC 60092-502 (1999) “Electrical Installations in Ships – Tankers – Special Features” in lieu of the electrical safety requirements associated with hazardous areas contained in Part 6-Chapter 3-Sect 6[6.2] in accordance with SOLAS Chapter II-1, Regulation 45.11.

iii. Vessels carrying oil having a flashpoint above 60°C subject to SOLAS are to comply with the requirements of Clause 4.3.1 of IEC 60092-502 (1999) “Electrical Installations in Ships – Tankers

- Special Features” in accordance with SOLAS Chapter II-1, Regulation 45.11.

iv. Vessels carrying oil having a flashpoint above 60°C subject to SOLAS are to comply with the requirements of Clause 4.3.2 of IEC 60092-502 (1999) “Electrical Installations in Ships – Tankers

- Special Features” when cargoes are heated to a temperature within 15°C of their flashpoint in accordance with SOLAS Chapter II-1, Regulation 45.11.

6.1.2 Earthed Distribution Systems

An earthed distribution system shall not to be used, except for the following applications.

i) Earthed intrinsically-safe circuits.

ii) Power supplied, control circuits and instrumentation circuits where technical or safety reasons preclude the use of a system without an earthing connection, provided the current in the hull is limited to 5 amperes or less in both normal and fault conditions.

iii) Limited and locally earthed systems, provided that any possible resulting current does not flow directly through any hazardous areas.

iv) Alternating-current power networks of 1 kV root mean square (rms) (line to line) and over, provided that any possible resulting current does not flow directly through any hazardous areas.

6.1.3 Hazardous Areas

The hazardous areas include: (Refer Chapter 6 Sect 6,Figure 6.6.1 below)

i) Cargo tanks and cargo piping

ii) Cofferdams, and permanent (for example, segregated) ballast tanks adjacent to cargo tanks

iii) Cargo pump rooms

iv) Compartments for cargo hoses

v) Enclosed or semi-enclosed spaces immediately above cargo pump rooms or having bulkheads above and in line with cargo bulkheads, where permitted by Reg. II-2/56 of SOLAS 1974, as amended

vi) Enclosed or semi-enclosed spaces, immediately above cargo pump rooms, or above vertical cofferdams adjacent to cargo tanks, unless separated by a gas-tight deck and suitably mechanically ventilated, where permitted by Reg. II-2/56 of SOLAS 1974, as amended

vii) Spaces, other than cofferdams, adjacent to and below the top of a cargo tank (for example, trunks, passageways and holds)

viii) Areas on open decks, or semi-enclosed spaces on open decks, within 3 m of any cargo tank outlets, gas or vapor outlet, cargo manifold valve, cargo valve, cargo pipe flange, cargo pump room entrances or cargo pump room ventilation openings

Note: Such areas are, for example, all areas within 3 m of cargo tank hatches, sight ports, tank cleaning opening, valve openings, sounding pipes, cargo vapor outlets, cofferdam of cargo tanks.

ix) Areas on open deck within spillage coaming surrounding cargo manifold valves and 3 m beyond these and other coamings intended to keep spillages clear of accommodation and service spaces, up to a height of 2.4 m above the deck

x) Areas on open deck over all cargo tanks (including all ballast tanks within cargo tank area) and to the full breadth of the vessel plus 3 m fore and aft on open deck, up to a height of 2.4 m above the deck which do not belong to the hazardous areas defined in Sect 6[6.1.3] viii), Sect 6[6.1.3] ix),

xi) Enclosed or semi-enclosed spaces, having an opening into any hazardous area unless Chapter 6 Sect 6[6.1.4] is applicable

xii) Enclosed or semi-enclosed spaces containing no source of hazard and having openings (including those for ventilating systems) into a hazardous area described in Sect 6[6.1.3] xiii),

xiii) Areas on open deck:

- A spherical-shaped area within 3 m to 5 m of pressure/vacuum valves used for small flow of vapor due to normal thermal variations in the tanks, or
- A cylindrical-shaped area of infinite height within 3 m to 10 m of vent outlets for free flow of vapor mixtures and high velocity vent outlets for passage of large amounts of vapor, air or inert gas mixtures, which do not belong to the hazardous areas defined in Sect 6[6.1.3] viii), Sect 6[6.1.3] ix), and Sect 6[6.1.3] x),

FIGURE Figure 6.6.1

Typical Hazardous Areas on Open Deck [Refer Chapter 6 sect 6 [6.1.3]

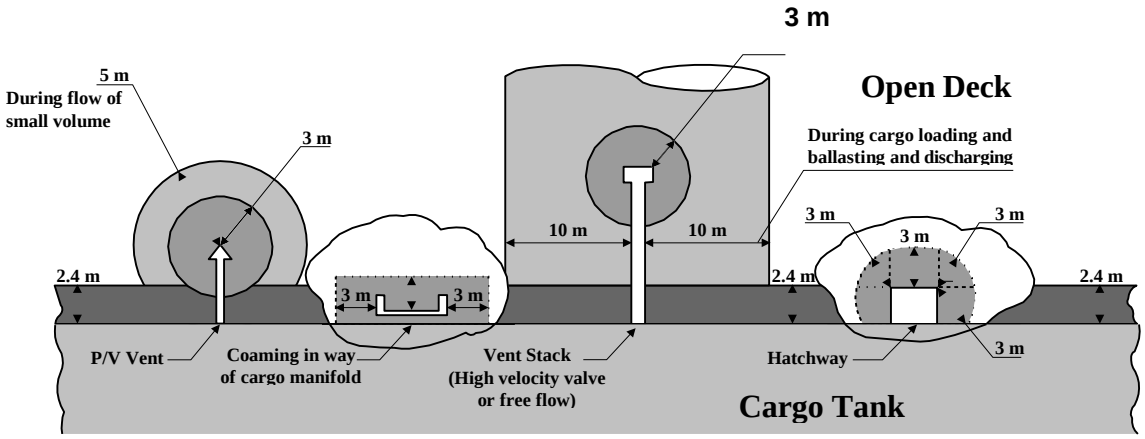

6.1.4 Enclosed Spaces Separated from Hazardous Areas by Air Locks

Equipment in enclosed spaces other than category A machinery spaces having access from open deck areas Chapter 6 Sect [6.1.3viii], Chapter 6-Sect 6[6.1.3] ix), Chapter 6-Sect 6[6.1.3x] and Chapter 6-Sect 6 [6.1.3 xiii] need not be of a certified safe type, provided the access is through a double door air lock and the arrangements comply with either type 1 or type 2 as follows:

6.1.4.1 Type 1

6.1.4.1(a) The air lock is to consist of two gas tight steel doors of self-closing type with no holding back arrangement, spaced at least 1.5 m (5 ft) but not more than 2.5 m (8 ft) apart and shall be provided with mechanical ventilation.

6.1.4.1(b) The nonhazardous space shall be maintained at overpressure relative to the external hazardous area.

6.1.4.1(c) The relative overpressure or air flow shall be continuously monitored and so arranged that in the event of ventilation failure, an audible and visual alarm is given at a manned control station and the electrical supply to all equipment not of an approved explosion-proof or intrinsically-safe type is automatically disconnected. A time delay on the disconnect will be considered, where necessary.

6.1.4.1(d) Equipment for maneuvering, anchoring and mooring, as well as the emergency fire pump and any other electrical equipment, the shutdown of which could in itself introduce a hazard, shall not to be located in spaces covered by this section unless the equipment is of an approved explosion- proof or intrinsically-safe type.

6.1.4.2 Type 2

6.1.4.2(a) The air lock is to consist of two gas tight steel doors of self-closing type with no holding back arrangement, spaced at least 1.5 m (5 ft) but not more than 2.5 m (8 ft) apart.

6.1.4.2(b) The non-hazardous space and the air lock shall be maintained at overpressure relative to the external hazardous area by independent mechanical ventilation systems arranged such that a single failure will not result in the simultaneous loss of overpressure in both the nonhazardous space and the air lock.

6.1.4.2(c) Failure of either ventilation system described in Chapter 6 Sect 6[6.1.4.2](b) is alarmed at a normally manned control station.

6.1.5 Installation of Equipment and Cables

6.1.5.1 General

Electrical equipment and wiring are not to be installed in any hazardous areas unless essential for operation purposes. In such cases, the installation of equipment and wiring are to comply with Chapter 6 Sect 6/Table 6.6.1

6.1.5.2 Cables

All cables installed within the hazardous areas described in Chapter 6 Sect 6[6.1.3] shall be sheathed with a nonmetallic external impervious sheath over a metallic braiding or a metallic armoring or to be of mineral-insulated copper- or stainless steel-sheathed type. A nonmetallic impervious sheath shall be applied over the metallic braiding, armoring or sheathing of all cables which may be subject to corrosion. Cables installed on open deck or on fore and aft gangways shall be protected against mechanical damage. Cable and protective supports shall be so installed as to avoid strain or chafing and due allowance made for expansion or working of the structure.

6.1.5.3 Sea Depth Sounder, Speed Log, and Impressed Current Cathodic Protection Systems

Hull fittings containing transducers for electrical depth sounding or speed log devices or containing terminals or shell penetrations for anodes or electrodes of an impressed current cathodic protection system for underwater hull protection are not to be installed in any cargo tanks of an oil carrier. However, it may be installed in hazardous areas, as permitted by Chapter 6 Sect 6/Table 6.6.1, provided the following are complied with:

6.1.5.3(a) Hull fittings containing terminals or shell-plating penetrations shall be housed within a gas-tight enclosure and are not to be located adjacent to cargo tank bulkhead

6.1.5.3(b) The box containing actual electrical connection of the cable, such as terminal box or junction box, shall be filled with insulating material, such as silicon grease, silicon sealing or equivalent and also to be of gastight construction;

6.1.5.3(c) All associated cables passing through these spaces shall be installed in extra-heavy steel pipe with gas-tight joints (no flanged joints), and with corrosion resistant coating up to, and including the underside of the main deck;

6.1.5.3(d) Cable gland with gastight packing shall be provided for the cable at both ends of the cable conduit pipe; and

6.1.5.3(e) Cable inside the vertical cable conduit pipe shall be suitably supported, e.g., by sand-filling, or by strapping to a support-wire. Alternatively, the cable inside the vertical conduit pipe may be accepted without provided support if the mechanical strength of the cable is sufficient to prevent cable damage due to the cable weight within the conduit pipe under continuous mechanical load. Supporting documentation shall be submitted to verify the mechanical strength of the cable with respect to the cable weight inside the conduit.

6.1.6 Spaces Above Forepeak Tank

Equipment located in enclosed spaces above forepeak tanks shall be of an approved explosion-proof or intrinsically-safe type if there is direct access from the space into the forepeak tank with any of the following arrangements:

i) The forepeak tank shall not separated from cargo oil tanks by a cofferdam.

ii) The forepeak tank is served by piping which also serves other spaces or tanks adjacent to cargo oil tanks, unless the only opening to the forepeak tank from the space above is through a gastight manhole and all other penetrations (i.e., sounding pipes) are led to the weather.

6.1.7 Cargo Oil Pump Room

6.1.7.1 Ventilation

6.1.7.1(a) System and Arrangement. Cargo oil pump rooms are to have a mechanical extraction ventilating system and ducting, in accordance with Sect 6[6.1.7.1]i), Sect 6[6.1.7.1]ii) Sect 6[6.1.7.1]iii), and Sect 6[6.1.7.1]iv) below.

i) Lower Intake. Lower (main) intakes shall be located at the lowest floor level. The number of air changes through the main intake with the damper in item ii) closed shall be at least twenty changes per hour based on the gross volume of the pump room.

ii) Emergency Intake. An emergency intake shall be provided at approximately 2 m (6.5 ft) above the lowest floor with damper capable of being opened or closed from the exposed main deck and lowest floor level so that it can be used when the lower intakes are not available. The air changes in that condition shall be at least fifteen changes per hour.

iii) Dampers. Where the ratio of areas of the upper emergency intake and lower main intakes is such that the required number of respective air changes in items i) and ii) above can be obtained, the dampers may not be required.

iv) Floor Plate. Floors shall be open grating type to allow the free flow of air.

6.1.7.1(b) Fan Motors and Fans. Fan motors shall be located outside of the pump room and outside of the ventilation ducts. Fans shall be of non-sparking construction in accordance with Chapter 6 Sect 3[3.6.4] Provision shall be made for immediate shutdown of the fan motors upon release of the fire extinguishing medium.

6.1.7.2 Gas Detection

A system for continuously monitoring the concentration of hydrocarbon gases in the pump room shall be fitted. A system utilizing sequential sampling is acceptable, provided the system is dedicated solely to the pump room, thereby minimizing the sampling cycle. Sampling points or detector heads shall be located in the exhaust ventilation duct and lower parts of the pump room at the floor level. The system is to give a visual indication of the level of concentration of hydrocarbon gases and an audible alarm if the concentration exceeds 10% of the lower explosive limit. Such alarm shall be provided in the cargo control room and on the navigation bridge.

6.1.7.3 Lighting

6.1.7.3 (a) Lighting fitted outside the pump room. As far as practicable, the lighting fixtures for pump room spaces shall be permanently wired and fitted outside of the pump room, except as noted below. Pump rooms adjacent to engine rooms or similar safe spaces may be lighted through substantial glass lenses or ports permanently fitted in the bulkhead or deck.

The construction of the glass lens port shall be as follows:

- Capable of maintaining watertight and gastight integrity of the bulkhead and deck.
- Suitably protected from mechanical damage.
- Provided with a steel cover capable of being closed and secured on the side of the safe space.
- Both the glass lens and its sealing arrangement will not be impaired by working of the hull.
- Structural strength of the pierced bulkhead or deck is suitably reinforced.

6.1.7.3 (b) Lighting fitted inside the pump room. As an alternative to Chapter 6 Sect 6[6.1.7.3(a)], certified safe lighting fixtures (Refer Chapter 6 Sect 6/Table 6.6.1) may be installed in the pump room, provided they are wired with moisture-resisting jacketed (impervious-sheathed) and armored or mineral-insulated metal- sheathed cable. Lighting circuits shall be so arranged that the failure of any one branch circuit will not leave these spaces in darkness. All switches and protective devices shall be located outside of the pump room. Refer also Part Chapter 6 Sect 3[3.6.1.2] for lighting circuits in hazardous areas.

6.1.7.3 (c) Lighting/Ventilation Interlock - For oil carriers 500 GT and over, lighting in cargo pump rooms, except emergency lighting, shall be interlocked with the ventilation system such that the ventilation system shall be in operation when switching on the lighting. Failure of the ventilation system shall not to cause the lighting to go out.

6.1.7.4 Cable Installation

Where it is necessary for cables, other than those of intrinsically-safe circuits and those cables supplying lighting fixtures in the pump room, to pass through cargo pump rooms, they shall be installed in extra-heavy steel pipes or other arrangements providing the same degree of gas tightness and protection.

6.1.8 Gas Monitoring System Installation

For gas monitoring of the cargo area, sampling type gas analyzing units which are not intended for a hazardous location may be located outside of cargo areas (e.g., in cargo control room, navigation bridge or engine room) when mounted on the inside of the front bulkhead and subject to compliance with the following:

i) Sampling lines are not to pass through gas safe spaces, unless permitted by -v below).

The non-safe type gas analyzing unit shall be installed in a safe area and the gas sampling lines shall be fitted with flame arresters. Sample gas shall be led to the atmosphere. The outlets shall be fitted with flame screens and shall be located in a safe location away from ignition sources. The area within 3 m (10 ft) of the outlet pipe shall be considered a hazardous location. Refer Chapter 6 Sect [6.1.3viii], and Chapter 6 Sect 6/Table 6.6.1, item f1.

ii) Where sampling pipes pass through bulkheads separating safe and dangerous areas, the penetrations shall be of an approved type having fire integrity at least as effective as the bulkhead. A manual isolation valve shall be fitted at each penetration on the gas safe side.

iii) The gas detection equipment, including sampling piping, sampling pumps, solenoids, analyzing units, etc., shall be contained in a gas-tight steel cabinet monitored by its sampling point. The entire gas analyzing unit shall be shut down when the gas concentration inside of the cabinet reaches 30% of the lower flammability limit.

iv) Where it is impracticable to mount the cabinet on the front bulkhead, sampling pipes shall be of steel or other equivalent material and without any detachable connections except for the isolating valves at the bulkhead and analyzing units. Runs of sampling pipes within safe space shall be of the shortest possible length.

6.1.9 Pipe Tunnel or Duct Keel

6.1.9.1 Ventilation

Where a permanent lighting system is installed, a mechanical ventilating system capable of providing at least eight air changes per hour based on the gross volume of the space shall be provided. The system is to have mechanical exhaust, natural or mechanical supply and ducting as required to effectively purge this space and all connecting access trunks. Fan motors shall be located outside of the space in question and outside the ventilation ducts. Fans shall be of non-sparking construction, in accordance with Chapter 6 Sect 3[3.6.4]

6.1.9.2 Lighting

Where a permanent lighting system is installed in enclosed spaces such as pipe tunnels, double bottoms or duct keels, it shall be in accordance with Chapter 6 Sect-6/[6.1.7.3(a)and (b)] The switches shall be accessible to authorized personnel only.Refer also Chapter 6 Sect 3-3[3.6.1.2]

6.1.9.3 Gas Detection System

An approved gas detection system with a visual indication of the gas concentration and an alarm for the high level shall be provided in accordance with Chapter 6 Sect 6[6.1.7.2] so as to adequately monitor the double bottom (pipe trunk) spaces.

6.1.10 Gas Detection for Double Hull and Double Bottom Spaces in the Cargo Area

Suitable portable instruments for measuring oxygen and flammable vapor concentrations shall be provided. Where the atmosphere in double hull spaces cannot be reliably measured using flexible gas sampling hoses, such spaces shall be fitted with permanent gas sampling lines. The materials of construction and dimensions of gas sampling lines shall be such as to prevent restriction. Where plastic materials are used, they shall be electrically conductive.

6.1.11 Integrated Cargo and Ballast Systems – All Cargo Flash Points

6.1.11.1 Application

The following requirements are applicable to integrated cargo and ballast systems installed on tankers (i.e., cargo ships constructed or adapted for the carriage of liquid cargoes in bulk), regardless of the flash point of the cargoes. The integrated cargo and ballast system means any integrated hydraulic and/or electric system used to drive both cargo and ballast pumps (including active control and safety systems and excluding passive components, e.g., piping).

6.1.11.2 Functional Requirements

The operation of cargo and/or ballast systems may be necessary, under certain emergency circumstances or during the course of navigation, to enhance the safety of tankers. As such, measures shall be taken to prevent cargo and ballast pumps becoming inoperative simultaneously due to a single failure in the integrated cargo and ballast system, including its control and safety systems.

6.1.11.3 Design Features

The following design features shall be fitted:

i) The emergency stop circuits of the cargo and ballast systems shall be independent from the circuits for the control systems. A single failure in the control system circuits or the emergency stop circuits are not to render the integrated cargo and ballast system inoperative.

ii) Manual emergency stops of the cargo pumps shall be arranged in such a way that they do not cause the ballast pump power pack to stop and thus make the ballast pumps inoperable.

iii) The control systems shall be provided with a backup power supply, which may be satisfied by a duplicate power supply from the main switchboard. The failure of any power supply is to provide audible and visible alarm activation at each location where the control panel is fitted.

iv) In the event of failure of the automatic or remote control systems, a secondary means of control shall be made available for the operation of the integrated cargo and ballast system. This shall be achieved by manual overriding and/or redundant arrangements within the control systems.

6.2 Vessels Carrying Coal in Bulk

6.2.1 Application

6.2.1.1 General

The foregoing requirements in this Section and the requirements in Sect 6[6.2.2] and Sect 6[6.2.3] below are applicable to vessels intended to carry coal in bulk by which an explosive and flammable atmosphere may be created.

6.2.1.2 Flag Administration

Attention is directed to the requirements for the carriage of coal in bulk in the IMO BC Code and their application as may be prescribed by the vessel's flag Administration. If requested by the vessel's Owner and authorized by the Administration, INTLREG will review the plans and carry out surveys in accordance with the above Code on behalf of the Administration.

6.2.2 Hazardous Areas

Space in which combustible and explosive dust/gas and air mixture is likely to occur in normal operation shall be identified as hazardous areas, such as cargo hold spaces, spaces with a direct opening to cargo hold spaces, or areas within 3 m (10 ft) of cargo hold ventilation outlets.

6.2.3 Installation of Equipment

6.2.3.1 Classified Electrical Equipment in Hazardous Area

Machinery, all electrical power, control and safety devices and wiring installed in locations where an explosive and flammable atmosphere (as may occur in spaces for coal) is expected to exist are to have a temperature classification T4 or higher (maximum surface temperature 132°C (275°F) or lower) and shall be suitable for operation in at least a Group IIA environmental classification, as defined in IEC Publication 60079-12.

6.2.3.2 Internal Combustion Engines in Hazardous Area

Where essential for operational purposes, the installation of internal combustion engines in hazardous areas will be subject to special consideration. In all instances, exhaust outlets shall be outside of all hazardous areas, excluding that produced by the exhaust outlet itself, and air intakes shall be not less than 3 m (10 ft) from hazardous areas.

6.2.3.3 Cargo Hold

6.2.3.3(a) Instruments for Measuring Readings shall be obtainable without entry into the cargo hold and without endangering the cargo and cargo hold's atmosphere. Instruments for measuring the following shall be provided:

i) Concentration of methane in the atmosphere,

ii) Concentration of oxygen in the atmosphere,

iii) Concentration of carbon monoxide in the atmosphere,

iv) pH value of cargo hold bilge samples.

Note: In addition to the instruments specified in Chapter 6-Sect 6[6.2.3.3(a)] above, it is recommended that consideration should be given by the Owner/designers to provide the means for measuring the temperature of the cargo in the range of 0°C (32°F) to 100°C (212°F), where it is intended to carry self-heating coal. Such arrangements should permit the temperature of the coal to be measured during the loading operations and during the voyage without requiring entry into the cargo space.

6.2.3.3(b) Cargo Atmosphere Measuring Equipment. An instrument for measuring methane, oxygen and carbon monoxide concentrations shall be provided, together with an aspirator, flexible connection, a length of tubing and means for sealing the sampling hole in order to enable a representative sample to be obtained from within the hatch cover surroundings. Alternative means for obtaining a representative sample will be considered.

6.2.3.3(c) Sampling Points Sampling points shall be provided for each hold, one on the port side and another on the starboard side of the hatch cover, as near to the top of the hatch cover as possible. Each sampling point shall be fitted with a screw cap and a threaded stub of approximately 12 mm (0.5 in.) bore, welded to the side of the hatch cover to prevent ingress of water and air. Alternative sampling point arrangements/details will be considered.

6.2.3.3(d) Warning Plate Permanent warning plate shall be installed in conspicuous places in cargo areas to state that smoking, naked flames, burning, cutting, chipping, welding or other sources of ignition are prohibited.

6.3 Cargo Vessels Carrying Motor Vehicles with Fuel in Their Tank

6.3.1 Application

In addition to the foregoing requirements in this Section, the following requirements are applicable to the cargo spaces carrying motor vehicles with fuel in their tanks.

6.3.2 Ventilation System

6.3.2.1 Arrangement

The ventilating system for enclosed spaces intended for the carriage of motor vehicles with fuel in their tanks for their own propulsion shall be independent from other ventilation systems and shall be capable of being controlled from a position outside of the space.

6.3.2.2 Capacity

An effective power ventilation system, sufficient to give at least six air changes per hour based on the volume of empty enclosed spaces in which vehicles shall be transported or stored, shall be provided. Refer also Part 6-3-6/[6.12]

6.3.2.3 Fans

Exhaust fans shall be of non-sparking construction in accordance with Chapter 6 Sect 3[3.5.4]

6.3.2.4 Material and Arrangement of Ducts

Ventilation ducts, including dampers, shall be of steel. Ducts serving spaces capable of being sealed shall be separated for such space.

6.3.2.5 Exhaust Inlet and Outlet

Inlet for exhaust ducts shall be located within 450 mm (17.75 in.) above the vehicle deck. The outlet shall be sited in a safe position, having regard to the source of ignition near the outlet.

6.3.2.6 Emergency Shutdown

Arrangements shall be provided to permit a rapid shutdown and effective closure of the ventilation system in case of fire, taking into account the weather and sea conditions. Refer also Sect 6[6.3.2.1] above

6.3.2.7 Navigation Bridge Indication

Means shall be provided on the navigation bridges or other appropriate locations to indicate any loss of the ventilating capacity.

6.3.2.8 Passenger Vessels

For passenger vessels, the following requirements shall be complied with, as applicable.

6.3.2.8(a) Special Category Spaces. The protection of all special category spaces, as defined below, is to comply with Regulations II-1/17-1, II-1/42-1 and II-2/20 of 1974 SOLAS, as amended.

Special Category Spaces are those enclosed spaces above or below the bulkhead deck intended for the carriage of motor vehicles with fuel in their tanks for their own propulsion, into and from which such vehicles can be driven and to which passengers have access.

6.3.2.8(b) Protection of Cargo Spaces, Other than Special Category Spaces, Intended for the Carriage of Motor Vehicles with Fuel in Their Tanks for Their Own Propulsion. All cargo spaces (other than special category spaces) containing motor vehicles with fuel in their tanks for their own propulsion are to comply with Regulations II-1/17-1, II-1/42-1 and II-2/20 of 1974 SOLAS, as amended.

6.3.3 Location and Type of Equipment

6.3.3.1 Certified Safe Type Equipment

Except as provided for in Sect 6[6.3.3.2] below, electrical equipment and wiring within the enclosed vehicle spaces shall be increased-safety, explosion-proof or intrinsically-safe type.

6.3.3.2 Alternative Arrangements

Except for a distance within 450 mm (17.75 in.) above a platform that does not have openings of sufficient size permitting penetration of petroleum gases downward, electrical equipment of a type so enclosed and protected as to prevent the escape of sparks, e.g., protection degree of IP55 or equivalent may be permitted as an alternative, provided the ventilating system is so designed as to provide continuous ventilation of the cargo spaces at the rate of at least ten air changes per hour and on the assumption that the system will be so operated whenever vehicles are carried onboard.

6.3.3.3 Equipment in Ducts from Vehicle Space

Electrical equipment and wiring installed within an exhaust duct shall be increased-safety, explosion-proof or intrinsically-safe type.

6.4 Ro-Ro Vessels

6.4.1 Application

In addition to the foregoing requirements in this Section, the following requirements are applicable to the vessels of Roll-on/Roll-off (Ro-Ro) type.

6.4.2 Ro-Ro Cargo Spaces

6.4.2.1 Ventilation

Closed ro-ro cargo spaces, as defined in Regulation II-2/3.12 of SOLAS 1974 as amended, are to have ventilation systems in compliance with the applicable requirements in Chapter 6 Sect 6[6.3.2]

6.4.2.2 Carriage of Motor Vehicles with Fuel in Their Tank

Closed ro-ro spaces intended for the carriage of motor vehicles with fuel in their tanks for their own propulsion are to meet the requirements in Chapter 6 Sect 6[6.3]

6.5 Gas Carriers or Chemical Carriers

6.5.1 Gas Carriers

For vessels carrying liquefied gases at or near atmospheric pressure and at temperature below atmospheric, electrical installations shall be in accordance with Part 7B relevant sections of the *INTLREG Rules for Building and Classing Steel Vessels*.

6.5.2 Chemical Carriers

For vessels carrying hazardous chemicals in bulk, electrical installations shall be in accordance with Part 7B, of relevant sections of the *INTLREG Rules for Building and Classing Steel Vessels*. Refer also Chapter 6 Sect 6[6.1.5.3] of these Rules.

TABLE 6.6.1

Electrical Equipment in Hazardous Areas for Oil Carriers [Refer Part 5B-6-6/[6.1.5.1]

Hazardous Area	Acceptable Electrical Equipment	
Cargo tanks and cargo piping as defined Chapter 6 Sect 6[6.1.3]	a1	Category “ia” intrinsically-safe apparatus and its associated wiring only.
Cofferdams and permanent (for example, segregated) ballast tanks adjacent to cargo tanks Refer Chapter 6 Sect 6[6.1.3 ii]	b1	Category “ia” intrinsically-safe apparatus and its associated wiring.
	b2	Hull fittings containing transducers for electrical depth sounding or log devices or containing the terminals. Refer Chapter 6 Sect 6[6.1.5.3]
	b3	Shell penetrations for anodes or electrodes of an impressed current cathodic protection system for underwater hull protection. Refer Chapter 6 Sect 6[6.1.5.3]
Cargo pump rooms Chapter 6 Sect 6[6.1.3iii]	c1	Intrinsically-safe apparatus.
	c2	Electrical devices as described in items b2 and b3 above this Table.
	c3	Explosion-proof lighting fixtures. Refer Chapter 6 Sect 3[3.6.1.2] and Chapter 6 Sect 6[6.1.7.3]
	c4	Explosion-proof type audible and/or visual devices for communication, general alarm and fire extinguishing medium release alarm.
	c5	Through-run of cables in extra-heavy pipe. Refer Chapter 6 Sect 6[6.1.7.4]
Compartments for cargo hoses, Chapter 6 Sect 6[6.1.3 iv] Enclosed or semi-enclosed spaces, as defined by Chapter 6 Sect 6[6.1.3 v] Chapter 6 Sect 6[6.1.3 vi]	d1	Intrinsically-safe apparatus.
	d2	Explosion-proof type lighting fixtures. Refer Chapter 6 Sect 3[3.6.1.2]
	d3	Through-runs of cable.
Spaces adjacent to and below the top of cargo tank, except for cofferdams, as defined by Chapter 6 Sect 6[6.1.3vii	e1	Intrinsically-safe apparatus.
	e2	Electrical devices as described in items b2 and b3 of this Table.
	e3	Explosion-proof type lighting fixtures. Refer Chapter 6 Sect 3[3.6.1.2] and Chapter 6 Sect 6[6.1.9]
	e4	Explosion-proof type audible and/or visual devices for communication, general alarm and fire extinguishing medium release alarm.
	e5	Through-run of cable; excepting those for intrinsically-safe circuits, such cables require special consideration.
Areas on open deck or semi-enclosed spaces on open deck, as defined by Chapter 6 Sect 6[6.1.3viii]	f1	Explosion-proof, intrinsically-safe, increased safety or pressurized type equipment suitable for use on open deck.
Areas on open deck as defined by Chapter 6 Sect 6[6.1.3 ix]	f2	Through-runs of cables without expansion bends in these areas.
Areas on open deck over all cargo tanks, including all ballast tanks within cargo tank area, as defined by Chapter 6 Sect 6[6.1.3x]	g1	Explosion-proof, intrinsically safe, increased safety or pressurized type equipment suitable for use on open deck.
	g2	Through-runs of cables.

Enclosed or semi-enclosed spaces having an opening into any hazardous area, as defined by Chapter 6 Sect 6[6.1.3 xi]	h1	Explosion-proof or intrinsically-safe type equipment.
Enclosed or semi-enclosed spaces (not containing a source of hazard) having openings to hazardous areas, Chapter 6 Sect 6[6.1.3 xii] Areas on open deck, as defined by Chapter 6 Sect 6[6.1.3 xiii] which are outside the hazardous areas in Chapter 6 Sect 6[6.1.3 viii] 6 Sect 6[6.1.3 ix] and 6 Sect 6[6.1.3 x]	i1	Explosion-proof, intrinsically safe, increased safety or pressurized type equipment suitable for use on open deck.

CHAPTER 7 SHIPBOARD AUTOMATIC OR REMOTE CONTROL AND MONITORING SYSTEMS

CONTENTS

SECTION 1 GENERAL

Contents

1.1 Scope

The requirements contained in this section are intended for unrestricted vessels of under 100m (328ft) in length fitted with control and monitoring systems that embody various degrees of automatic or remote control and monitoring of the propulsion machinery and propulsion-machinery space. These requirements are in addition to those in other sections of the Rules. The following table indicates the applicability of the relevant requirements:

Vessel's Length (L)	*Gross Tonnage (GT)*		
	Under 500	*500 or over/not assigned optional* ***CCS or UM*** *symbol*	*500 or over/assigned optional* ***CCS or UM*** *symbol*
L < 20 m (65 ft)	Will be specially considered	Will be specially considered	—
20 m (65 ft) ≤ L ≤46 m (150 ft)	Use Chapter 7 Sect 6	Use Chapter 7-Sect1to Chapter 7-Sect 3	Use Chapter 7-Sect 4 or Chapter 7-Sect 5, as applicable
L > 46 m (150 ft)	Use Chapter 7 Sect 6	Use Part 6-Chapter 8-Sect 1 and Part6-Chapter 8-Sect 7of the *INTLREG Rules for Building and Classing Steel Vessels*	Use Part 6-Chapter 8-Sect 1 to Pt 6-Chapter 8-Sect 7 of the *INTLREG Rules for Building and Classing Steel Vessels*, for **CCS** or UM Part 6-8-1 to Part 6-8-7 of IRS plus Part Chapter 7-Sect 5 for **UM** as applicable

Consideration will be given to vessels of special design such as surface effect vessels, air cushion vessels, etc., upon submission of manufacturer's specification and drawings.

1.2 Propulsion Class Notations

Where requested by the Owner, automatic or remote control and monitoring systems for propulsion and monitoring systems of propulsion-machinery space that comply with the relevant requirements of this Section will be distinguished in the *Record* as follows. A certificate indicating the degree of automation, particulars and operating limitations, if any, shall be issued..

1.2.1 Vessels ≥ 500 GT and ≤ 46 m (150 ft) in Length

1.2.1.1 UM Notation

Automatic or remote control and monitoring systems complying with Chapter 7 Sect 4 will be distinguished in the *Record* by the notation UM

1.2.2 **Class notations**

1.2.2.1 CCS notation

Where it is proposed that the propulsion and auxiliary machinery is to operate with the continuous supervision from a centralized control station, it is mandatory that the provisions of Part 6-Chapter 8-Sect 2/[2.13.] shall be complied with and only after the verification of compliance will the class notation CCS be assigned.

1.2.2.2 UM notation

Where it is being intended that the propulsion machinery space is to be periodically unmanned and that the propulsion machinery is to be controlled mainly from the navigation bridge, it is mandatory that the provisions of Part 6- Chapter 8-Sect 4[4.1.] to be complied with and only after the verification of compliance will the class notation UM be assigned.

1.2.2.3 ICC notation

This notation may be assigned when the arrangements are such that the control and supervision of ship operational function is computer based. It denotes that the control engineering equipment has been arranged, installed and tested in accordance with INTLREG Rules, or is equivalent thereto. Refer Part 6-8-5 .

The continuance of validity of these notations is subject to periodical survey of the propulsion remote control and automation systems.-

CCS or UM class notation may be granted to vessels of < 500 GT and a length of 20 m (65 ft) $\leq L \leq$ 46 m (150 ft), provided that the applicable requirements in Sections Part 6- Chapter 8-Sect 1[1.2]

1.3 Definitions

The following definitions apply for the purpose of this Chapter:

1.3.1 Machinery Space

Refer Chapter 1[1.7]

1.3.2 Manned Space

Means any space assigned at all times with crew members needed to locally supervise the operation of the specific machinery or system installed in the space.

1.3.3 Automatic Control

Type of control which is self-regulating in carrying out ordered instruction without action by the operator.

1.3.4 Remote Control

It is the control from a distance of apparatus by means of an electrical or other link.

1.3.5 Local Control

Control by an operator of machinery through a device located on or adjacent to the controlled machinery.

1.3.6 Remote Station

A permanent installation fitted with effective control and/or monitoring means and located at a distance from the specific machinery.

1.3.7 Centralized Control Station

It is a propulsion control station fitted with instrumentation, control systems and actuators for enabling propulsion and auxiliary machinery be controlled and monitored, and the state of propulsion machinery space be monitored, without requiring regular local attendance in the propulsion machinery space.

1.3.8 Instrumentation

A monitoring device including sensing and transmitting component.

1.3.9 Monitoring System

A system designed for observing the correct operation of the equipment by the detection of incorrect functioning (measures of variables compared with specified value.

1.3.10 Display Systems

Display systems are those which display operating machinery parameter values such as pressure, temperature, liquid flow, motor running, etc., or the sequential operation of the system's process.

1.3.11 Alarm

A visual and audible signal of a predetermined out of limits parameter for the controlled and/or monitored machinery or system.

1.3.12 Summary-alarm

A common alarm activated by any abnormal condition of the monitored machinery or system.

1.3.13 Safety Systems

It is an automatic control system designed to automatically lead machinery being controlled to a predetermined less critical condition in response to a fault which may endanger the machinery or the safety of personnel and which may develop too fast to allow manual intervention. To protect an operating machine in the event of a detected fault, the automatic control system may be designed to automatically:

a Start a standby support service so that normal operation is resumed by the machine.
b. Slow down the machine or reduce its demand.
c. Shut down the machine.

For the purpose of this Chapter, automatic shutdown, automatic slowdown and automatic start of standby pump are all safety system functions. Where "safety system" is stated hereinafter, it means any or all three automatic control systems.

1.3.14 Emergency Shutdown Systems

Systems intended for manual activation in an emergency to stop a particular system's function or machinery operation.

1.3.15 Fail-safe

A designed failure state which has the least critical consequence. A system or a machine is fail safe when, upon the failure of a component or subsystem or its functions, the system or the machine automatically reverts to a designed state of least critical consequence

1.3.16 Independent

As applied to two systems, means that one system will operate with the failure of any part of the other system including power sources and its supply connection. However, for electrical

systems which are not required to have an emergency source of power as the standby power source, failure of the power source may be excluded from this criteria.

1.3.17 Computer-based System

A computer-based system consists of one or more electronic or optical devices which together with their peripherals and using fixed or programmable logic and memories, processes input data and output signals for purposes of display, alarm, control or storage. The system is understood to comprise all required hardware, i.e., microprocessors, monitor (video display unit), keyboard, etc., and data transmission path (data highways).

1.3.18 Nonvolatile Memory

Memory which does not require power to retain the stored data.

1.3.19 Computer Monitor (Video Display Unit)

A device where computer information or data is displayed.

1.3.20 INTLREG Type Approval Program

Certification scheme whereby INTLREG certifies, at the request of the equipment manufacturer, that the specific equipment conforms to cited standards and to cited ratings which INTLREG has verified by engineering analysis, and that an appropriate quality system is in place to manufacture a product of consistent quality. Refer the INTLREG Type Approval Program Part 1-Chapter 1-Sect 11[11.1] of the INTLREG Rules for Conditions of Classification (Part 1). The INTLREG Type Approval Program and the indicated references are available for download from the INTLREG website at http://www.eagle.org.

1.3.21 Integrated Propulsion Machinery

A propulsion machinery having its auxiliaries (fuel oil pumps, cooling water pumps, etc.), necessary for normal operation driven by the engine, the reduction gear or the propulsion shaft.

1.4 Required Plans and Data

Plans and data associated with automatic or remote control and monitoring of machinery and systems shall be submitted for approval in accordance with Chapter 1 Sect 1[1.4] and are to include the following:

1.4.1
A list of electrical, pneumatic or hydraulic equipment associated with the particular systems. This is to include manufacturer's name, model number, material, ratings, degree of protection, permissible angles of inclination and location of installation within the vessel.

1.4.2
A list of all major components installed within the particular equipment (i.e., control console, etc.) and the data as required in Chapter 7 Sect 1[1.4.1] above

1.4.3
Certificates or test reports, as appropriate, attesting to the suitability of the particular equipment in compliance with the environmental criteria Refer Chapter 7 Sect 2[2.8] and Chapter 7 Sect 2[2.9]. For equipment that have been already certified by INTLREG and provided their certification remains

valid, the submission of a copy of pertinent certificate will suffice. Refer Chapter 7 Sect 2[2.9.2]

1.4.4

Plans showing the location of control and monitoring stations, controlled equipment and piping/cable runs, etc.

1.4.5

Arrangements and details of the control consoles and panels, including plan views and elevation details, installation details and wiring data (rating, construction standard, insulation type, armored/unarmored/shielded/ non-shielded, temperature rating, flame-retardant properties, etc.).

1.4.6

A list of all cables connecting equipment associated with the systems. This is to include construction standard, electrical rating, insulation type, armored/unarmored/shielded/non-shielded, temperature rating, size and connected load's power consumption requirements.

1.4.7

A complete operational description of the automatic or remote control and monitoring systems, including a list of alarms and displays and functional sketches or description of all special valves, actuator, sensors and relays.

1.4.8

A simplified one-line diagram (electrical and piping) of all power and automatic or remote control and monitoring systems. This is to include power supplies, circuit or piping protection ratings and settings, cable or pipe sizes and materials, rating of connected loads, etc.

1.4.9

A schematic diagram of all control, alarm, display and safety systems.

1.4.10

For computer-based systems, the following shall be included:

i) Overall description and specification of the systems and equipment.

ii) Block diagrams for the computer hardware showing interfacing between the work stations, input/output (I/O) units, local controllers, traffic controllers, data highways, etc.

iii) Logic flow chart or ladder diagrams.

iv) Description of the alarm system indicating the ways it is acknowledged, displayed on the monitor or mimic display board, etc.

v) Description of the system redundancy and backup equipment, if any.

vi) Description of the data communication protocol, including anticipated data process response delays.

vii) Description of the system's security protocol to prevent unauthorized program changes which may compromise the integrity of the automatic or remote systems.

viii) Description of the system with regard to the degree of independence or redundancy provided for the control systems, alarm/display systems and safety systems.

ix) Description of system's task priorities.

x) Where applicable, description of UPS (uninterruptible power supply) and their capacities, including system's power consumption.

xi) Equipment ratings and environmental parameters.

1.4.11

Installation methods (electrical, pneumatic and hydraulic). This is to include details of cable or pipe

runs, separation of cables of different voltage rating and insulating rating, cable tray laying, deck or bulkhead penetration, prevention of magnetic interference, etc. Refer also Chapter 7 Sect 2[2.8.5]

1.4.12

A matrix chart for each of the systems indicating the following, as applicable, upon activation of a given alarm or safety action:

i) Name, device designations and type, and location of alarms.

ii) Preset parameter values, if any.

iii) Automatic tripping and other safety provisions of controlled equipment.

iv) Location of control stations where shutdown, and control and monitoring power supply transfer devices are fitted.

v) Special remarks, if any.

1.5 Tests and Surveys

1.5.1 Installation Tests

Automatic or remote control and monitoring systems shall be subjected to tests witnessed by the Surveyor during and after installation onboard, as outlined in this Section.

1.5.2 Periodical Surveys

The continuance of **CCS** or **UM** certification is subject to periodic survey of the automatic or remote control and monitoring systems installation.

SECTION 2 GENERAL SYSTEMS DESIGN AND ARRANGEMENT REQUIREMENTS

Contents

2.1 General

Automatic or remote controls and monitoring systems as referenced in this Section include control, alarm/display and safety systems. For computer-based systems, Refer Chapter 7 Sect 2[2.5]

2.2 Automatic or Remote Control Systems

2.2.1 Characteristics

Automatic or remote control systems shall be of the fail-safe type and designed to preclude detrimental mechanical or thermal overloads to the controlled machinery.

2.2.2 Interlocks

To preclude damage to the controlled machinery, means shall be fitted to disable the starting mechanism after designated unsuccessful starting attempts. Similarly, controlled machinery or systems fitted with more than one remote control station shall be provided with interlocking means to preclude simultaneous control or unauthorized transfer to associated remote stations not in control. However, control units interconnected with a specific associated remote control station and which are within sight of each other may be accepted without interlocks.

2.2.3 Transfer of Control

Transfer of controls from a remote control station under operation to other associated remote stations shall be possible by a request from the receiving station and acceptance by the station in operation, or vice versa. Refer also Chapter 7 Sect 3[3.4]. All control stations are to have indicators showing which station is in control.

2.2.4 Automatic Controls

Automatic control systems shall be designed to maintain the controlled machinery within pre-set parameters and to ensure that the machinery operates in the correct sequence and time intervals. Deviation from these pre-set conditions is to force the sequential controls to a safe sequence stage that will not be detrimental to the machinery and overall safety of the vessel. Additionally, adequate arrangements shall be included to disable the automatic control mode and restore manual controls.

2.2.5 Remote Controls

Remote controls shall be arranged to provide the same degree of safety and operability as those provided for local controls. Upon a given control input, the controlled device is to respond according to a pre- established sequence of events and results.

2.2.6 Local Controls

Remotely operated machinery or systems shall be provided with effective means of independent controls at or in the proximity to the machinery or systems. Means shall be provided locally to disconnect or override other associated remote stations or disable automatic control, if any.

2.2.7 Suitability of Equipment

Equipment associated with automatic or remote control systems shall be suitable for the intended location. Control systems are to comply with the requirements contained in Chapter 7 Sect 2[2.8] and Chapter 7 Sect 2[2.9]

2.3 Alarm Systems

2.3.1 Characteristics

Alarm systems shall be of the self-monitoring type and designed so that a fault in the alarm system is to cause it to fail to the alarmed condition. Additionally, they are not to react to normal transient conditions or spurious signals.

2.3.2 Independence

Alarm systems shall be independent of control and safety systems, except that common sensors will be acceptable.Refer Chapter 7 Sect 2[2.4.3]

2.3.3 Visual and Audible Alarm

Alarms shall be both audible and visual and shall be provided at the control stations, as required in this Section. Alarms are to clearly identify the system and service of the faulted machinery or machinery components. Visual alarms shall be displayed in a distinguishable manner such that alarms for similar machinery or systems are grouped together and the colors representing a particular function or condition remain uniform. Visual alarms are to flash when first activated. Audible alarms associated with machinery shall be of distinctive tone from other alarms, such as fire-alarm, general alarm, gas detection, etc., and they shall be of sufficient loudness to attract the attention of duty personnel. For spaces of unusually high noise levels, a beacon light or similar, installed in a conspicuous place, is to supplement any of the audible alarms in such spaces. However, red light beacons are only to be used for fire alarms.

A fault in the visual alarm circuits shall not to affect the operation of the audible alarm circuits. For computer- based system, Refer Chapter 7 Sect 2[2.5]

2.3.4 Acknowledgment of Alarms

Alarms shall be acknowledged by manually changing the flashing display of the incoming alarm to a steady display and by silencing the audible signal. The steady state light display is to remain activated until the fault condition is rectified. Alarming of other faults that may occur during the acknowledgment process shall not to be suppressed by such action and shall be alarmed and displayed accordingly. The silencing of the audible alarm from an associated remote control station shall not to lead automatically to the silencing of the original alarm at the centralized control and monitoring station.

2.3.5 Disconnection and Resumption of Alarm Functions

Alarm circuits may be temporarily disabled for maintenance purposes or during initial start-up of machinery, provided that such action is clearly indicated at the associated station in control.

2.3.6 Summary-alarms

In addition to required alarms to be fitted at the centralized control and monitoring station, visual alarms may be displayed and alarmed at other associated remote control stations as summary-alarms.

2.3.7 Built-in Testing

Alarm systems shall be provided with effective means for testing all audible and visual alarms and indicating lamps without disrupting the normal machinery or system operation. Such means shall be fitted in the associated remote stations.

2.3.8 Suitability of Equipment

Equipment associated with automatic or remote alarm systems shall be suitable for the intended location. Alarm systems are to comply with the requirements contained Chapter 7 Sect 2[2.8] and Chapter 7 Sect 2[2.9]

2.4 Safety Systems

2.4.1 General

Safety systems shall be provided as required in this Section. Considerations will be given to the manual activation of safety systems, provided that measures are taken, by the inherent design of the system or by suitable arrangements, to retard the escalation of the abnormal condition and to alert personnel to take the appropriate action prior to the developing of a dangerous condition.

2.4.2 Characteristics

Safety systems shall be of the fail-safe type and are to respond automatically to fault conditions that may endanger the machinery or safety of the crew. Unless otherwise required in this Section or specially approved, this automatic action is to cause the machinery to take the least drastic action first, as appropriate, by reducing its normal operating output or switching to a stand-by machinery and last, by stopping it, i.e., disrupting source of fuel or power supply, etc.

2.4.3 Independence

Safety systems for different parts of the machinery plant shall be independent of each other. The safety system intended for the functions specified in Chapter 7 Sect 1[1.3.13c] (shutdown) shall be completely independent of the control and alarms systems so that a failure in these systems will not prevent the safety system from operating. However, for the functions specified in Chapter 7 Sect 1[1.3.13a] and Chapter 7 Sect 1[1.3.13b]complete independence of the safety systems from the control and alarm systems shall not required.

2.4.4 Activation

Each safety action shall be alarmed at the associated remote station. When both an alarm and a safety action are required for a specific failure condition, the alarm shall be activated first.

2.4.5 Resumption of Operation

Machinery that is stopped as a result of a safety action shall not to resume operation unless it is reset manually.

2.4.6 Override of Safety Provisions

Remote overrides are not to override those safety actions specified in other Sections (i.e., Part Part 6- Chapter 8-Sect 3[3.4.3]of the *INTLREG Rules for Building and Classing Steel Vessels*). For safety action specified in subject Part 6, Chapter 8, any overrides of safety provisions shall be so arranged that they cannot go unnoticed and their activation and condition shall be alarmed and indicated at the associated remote station. The override shall be arranged to preclude inadvertent operation and shall not to deactivate alarms associated with safety provisions. The override mechanism to disconnect safety provisions shall be fitted at the associated remote station, except that same may be fitted at the centralized control and monitoring station instead. Overrides fitted on the bridge shall be operable only when in the bridge control mode.

2.4.7 Suitability of Equipment

Equipment associated with safety systems shall be suitable for the intended location. Safety systems are to comply with the requirements contained in Chapter 7 Sect 2[2.8] and Chapter 7 Sect 2[2.9]

2.5 Computer-based Systems

2.5.1 General

Computer-based systems shall be designed so that failure of any of the system's components will not cause unsafe operation of the system. Hardware and software serving vital and non-vital systems shall be arranged to give priority to vital systems.

2.5.2 Independence

Control, alarm and safety shutdown system functions shall be arranged such that a single failure or malfunction of the electronic computer equipment will not affect more than one of these system functions. This shall be achieved by dedicated equipment for each of these functions within a single system, or by the provision of back-up equipment, or by other suitable means considered not less effective.

2.5.3 Visual Display of Alarm

2.5.3.1 Incoming Signals

In addition to the requirements contained in Chapter 7 Sect 2[2.3] and when displayed by way of a computer monitor (video display unit), alarms shall be presented in an identifiable manner, and when displayed, alarms are to appear in the sequence as the incoming signals are received. Alarming of incoming fault signals are to automatically appear on the screen to alert the on-duty personnel, regardless of whether the computer and monitor (video display unit) are in a mode other than the monitoring mode (i.e., computing or displaying other system's mimic or schematic diagrams).

2.5.3.2 Unrectified Alarms

Alarms associated with faults which have not been rectified may be displayed in a summarized fashion until all of the faults have been dealt with.

2.5.3.3 Computer Monitor (Video Display Unit)

Displays on the computer monitor (video display unit) shall be clearly visible under ambient lighting conditions Computer monitors on the navigation bridge shall be provided with dimmers to control display lighting. Data displayed on computer monitors shall be readable by the operator from the normal operating position.

2.5.3.4 Response Delay

The time limit on response delays for safety and alarm displays shall not to exceed two seconds.

2.5.4 Memory Capacity and Response Time

Computer system's memory shall be of sufficient capacity to handle the operation of all computer programs (software) as configured in the computer system. The time response for processing and transmitting data shall be such that undesirable chain of events may not arise as a result of unacceptable data delay or response time during the computer system's worst data overload operating condition (multi-tasking mode).

2.5.5 Data Loss and Corruption

To preclude the possible loss or corruption of data as a result of power disruption, program and associated memory data considered to be essential for the operation of the specific system shall be stored in non- volatile memory or a volatile memory with a secure uninterruptible power supply (UPS).

2.5.6 Power Supply Disruption

The system's software and hardware shall be designed so that upon restoration of power supply after power failure, automatic or remote control and monitoring capabilities can immediately be available after the pre- established computer control access (sign-in) procedure has been completed.

2.5.7 Parameters and Program Changes

Alteration of parameters that may affect the system's performance shall be limited to authorization personnel by means of key switch, keycard, password or other approved methods. Similarly, computer program or system's configuration changes shall be effected only by authorized personnel.

2.6 Supply, Arrangement and System Protection of Automatic or Remote Control and Monitoring System

2.6.1 Supply and Arrangement

2.6.1.1 General

The power distribution to control systems, alarm/display systems (considered as one for the purpose of this requirement) and safety systems shall be provided with their individual circuits so that a fault in one of the systems cannot cause loss of the other systems. Their supply status and failure condition shall be displayed and alarmed at the associated remote propulsion station.

2.6.1.2 Electrical

2.6.1.2(a) Power Source. Power supply requirements provided in]Sect 2[2.6.1.1] above, as applicable, shall be complied with. Electric power for control, monitoring and safety systems shall be fed from two feeders, one from the main switchboard or other suitable distribution board and the other from the emergency switchboard or an emergency distribution board. The supply status of these feeders shall be displayed and the main power supply failure shall be alarmed. The electric power supply to each of the control, monitoring and safety systems shall be individually monitored. For vessels whose propulsion machinery spaces are intended for unattended operation shall be complied with.

In the event of power supply failure, the propulsion prime movers are to continue to operate at the last ordered speed and the propellers at the last ordered direction of thrust until local control is in operation or control power is safely resumed.

2.6.1.2(b) Power Supply Transfer. The two feeders shall be connected to a transfer switch in the remote control station. Power supply to controls, monitoring and safety systems may be commonly connected to the transfer switch. The transfer between the power supplies may be effected by manual means at the remote control station. For vessels whose propulsion machinery spaces are intended for unattended operation

2.6.1.3 Hydraulic

The hydraulic pumps for control and monitoring systems shall be fitted in duplicate. The pump suctions shall be from a reservoir of sufficient capacity to contain all of the fluid when drained from the system, maintain the fluid level at an effective working height and allow air and foreign matter to separate out. The pump suctions shall be sized and positioned to prevent cavitation or starvation of the pump. The hydraulic fluid shall be suitable for its intended operation.

2.6.1.4 Pneumatic

Compressed air for control and monitoring systems shall be supplied from at least two air compressors. The starting air system, where consisting of two air compressors, may be used for this purpose. The system shall be arranged such that a single failure will not result in the loss of air supply. The required air pressure shall be automatically maintained.

Means shall be provided to assure that the compressed air for control and monitoring systems is clean, dry and oil-free to a specification compatible with the control and monitoring equipment. In this regard, the compressors, cooling equipment, filters and dryers shall be selected and arranged as necessary to ensure the quality of the air supplied will comply with the standards or criteria identified by the manufacturers of the pneumatic equipment being installed in the system (e.g., max. solid particle size/density, max. dew point, max. oil content, etc.).

Air supplies to safety systems and control systems may be derived from the same source, but shall be by separate lines incorporating shutoff valves.

2.6.2 System Protection

2.6.2.1 Electrical

Circuits shall be arranged so that a fault in one circuit will not cause m*a*l-operation or failure on another circuit or system. It shall be possible to isolate the faulted circuit. Additionally, systems shall be protected against accidental reversal of power supply polarities, voltage spikes and harmonic interference, and in no case is the system's total harmonic distortion to exceed 5%.

2.6.2.2 Hydraulic

Pipe systems subject to pressure build-up that may exceed the rated pressure of the pipe and associated components shall be provided with suitable pressure relief devices fitted on the pump's discharge side. Each relief valve shall be capable of relieving not less than full pump flow with a maximum pressure rise of not more than 10% of the relief valve setting.

2.6.2.3 Pneumatic

The requirements in Sect 2[2.6.2.2] shall be complied with, as applicable.

2.7 Communications Systems

For communication systems associated with propulsion control stations, the requirements in Part 6-8-5/[5.6] are applicable.

2.8 Equipment Construction, Design and Installation

2.8.1 General

Equipment associated with remote or automatic control and monitoring systems is to meet compliance with the requirements contained herein. Deviation from the environmental requirements such as temperature, humidity and corrosion will be considered for equipment intended for installation in ambient controlled rooms or enclosures. Refer Chapter 7 Sect 2[2.8.5.2] and Chapter 7 Sect 2[2.8.5.7] Similarly, where equipment is installed in environments having parameters other than those as specified in Chapter 7 Sect 2 Table 7.2.1 (i.e., cryogenic or highly corrosive environments, etc.), special consideration corresponding to those of the operating environment will be required.

2.8.2 Electrical

Equipment shall be constructed of robust, durable and flame-retardant material. It shall be designed to incorporate the degree of enclosure protection.

Non-current carrying metal parts shall be effectively earthed.

2.8.3 Hydraulic

Hydraulic pumps, actuators, motors and accessories shall be suitable for the intended service, compatible with the working fluid and shall be designed to operate safely at full-power conditions. In general, the hydraulic fluid shall be nonflammable or have a flash point above 157°C (315°F).

2.8.4 Pneumatic

Air compressors, actuators, motors and accessories shall be suitable for the intended service and have working and other parts that will not be damaged or rendered ineffective by corrosion.

2.8.5 Installations

2.8.5.1 General

The installation of equipment associated with automatic or remote control and monitoring systems shall be carried out taking into consideration adverse effects that may be introduced by their exposure to unintended temperatures, weather, vibration conditions, falling objects or liquid, electromagnetic interference, high voltage systems, electric noise, etc. Additionally, the installation is to facilitate the checking, adjustment and replacement of components, including filters and sensing devices, without disrupting the normal operation of the system, as far as practicable.

2.8.5.2 Ranges in Ambient Temperatures

For the selection and installation of equipment associated with control and monitoring systems, a temperature range of 5°C (41°F) to 55°C (131°F) shall be considered for machinery space, control rooms, accommodations and navigation bridge. When equipment is located inside panels or cubicles, consideration shall be given to the temperature rise inside those panels due to the dissipation of heat from its own components. Refer also.Chapter 7 Sect 2/Table 7.2.1 Note 1

Where compliance with the above temperature ranges cannot be met, consideration will be given to the installation of equipment per Chapter 7 Sect 2[2.8.5.7]

2.8.5.3 Electromagnetic and Conducted Interference

In general, the installation of equipment associated with automatic or remote control and monitoring systems in areas of unusual electromagnetic systems in areas of unusual

electromagnetic sources shall be avoided. Where the values per Chapter 7 Sect 2/Table 7.2.1.of this chapter may be exceeded, appropriate measures shall be implemented to reduce the effects of electromagnetic and conducted interference. To avoid electromagnetic noise caused by circulating currents, the conductive shield and cable armor shall be earthed only at one end of the cable. Description of the preventive measures to be followed is to be submitted for review.

2.8.5.4 Shielded Cables

To avoid possible signal interference, cables for automatic or remote control and monitoring systems occupying the same cable tray, trunk or conduit with power cables shall be of the shielded type.

2.8.5.5 Electrical Grounding

Automatic or remote control and monitoring systems are not to have common earth conductors with systems of higher voltage level.

2.8.5.6 Condensation

Electrical equipment liable to be exposed to ambient temperature fluctuations shall be provided with means to prevent accumulation of moisture inside of the component's enclosure (i.e., by the provisions of space heaters that automatically energize upon shutdown or disconnection of the electrical component).

2.8.5.7 Cold Environment

Electrical equipment which may be adversely affected by the exposure to temperatures lower than those for which they are designed shall be provided with suitable heating arrangements so that they may be readily operated when needed. Refer Chapter 7 Sect 2[2.8.5.2]

2.8.5.8 Protection Against Falling Liquids or Leakage of Fluid Medium

Electrical equipment shall not to be installed in the same compartment or cabinet containing equipment or pipes carrying water, oil or steam unless effective measures are taken in order to protect the electrical equipment from possible fluid leakage (i.e., welded connections, physical isolation together with suitable draining arrangements, etc.).

2.8.5.9 Measuring and Sensing Devices

The installation of measuring and sensing elements is to permit their easy access for functional testing or replacement.

2.8.5.10 Marking

All units, controllers, actuators, displays, terminal strips, cable and test points, etc. shall be clearly and permanently marked. Their systems and system's functions shall be included so that they can be easily identified in associated drawings and instrument lists.

2.9 Equipment/Components Qualifications and Trials

2.9.1 Equipment/Components Qualifications

The manufacturers and assemblers of automatic or remote control and monitoring equipment/ components associated with main propulsion engines are to provide documented evidence showing that the equipment/ components have been tested individually or by acceptable

sampling to establish their suitability for the intended service.

2.9.2 Type Approval of Automatic or Remote Control and Monitoring Equipment

Equipment that meets the requirements contained in this subsection or Chapter 7 Sect 4[4.2] is eligible to be certified under the INTLREG Type Approval Program upon formal request by the equipment manufacturer. Refer also Chapter 7 Sect 1[1.3.20] and Chapter 7 Sect 1[1.4.3]

2.9.3 Trials

Automatic or remote control and monitoring systems and associated equipment shall be tested in the presence of the Surveyor, under normal operating conditions and for the period that the Surveyor may deem necessary or otherwise specified in other Subsections.

TABLE 7.2.1

Type Tests for Control, Monitoring and Safety Equipment

No	TEST	PROCEDURE ACCORDING. TO: [Refer Note 7]	TEST PARAMETERS			OTHER INFORMATION
1.	Power supply variations (a) electric	---	AC Supply			
			Combination	Voltage variation permanent (%)	Frequency variation permanent (%)	
			1	+ 6	+ 5	
			2	+ 6	– 5	
			3	– 10	– 5	
			4	– 10	+ 5	
			Combination	Voltage transient 1.5 s (%)	Frequency transient 5 s (%)	
			5	+ 20	+ 10	
			6	– 20	– 10	
			DC Supply			
			Voltage tolerance continuous		± 10%	
			Voltage cyclic variation		5 %	
			Voltage ripple		10 %	
			Electric battery supply: + 30% to – 25% for equipment connected to charging battery or as determined by the charging/discharging characteristics, including ripple voltage from the charging device; + 20% to – 25% for equipment not connected to the battery during charging			

2	Power supply variations(Continued) (b) Pneumatic and hydraulic	---	Pressure: ± 20% Duration: 15 minutes	
3.	Dry heat	IEC 60068-2-2	Temperature: 55°C (131°F) ± 2°C (3.6°F) Duration: 16 hours Or Temperature: 70°C (158°F) ± 2°C (3.6°F) Duration: 16 hours [Refer Note 1]	Equipment operating during conditioning and testing; Functional test during the last hour at the test temperature. For equipment specified for increased temperature the dry heat test is to be conducted at the agreed test temperature and duration.
3A.	Dry heat – Higher Temp (Refer Note 8) (Optional Test	IEC 60068-2-2	Temperature: 70°C (158°F) ± 2°C (3.6°F) Duration: 16 hours [Refer Note 8]	Equipment operating during conditioning and testing; Functional test during the last hour at the test temperature;
4.	Damp heat	IEC 60068-2-30 - Test Db	Temperature:55°C (131°F) Humidity: 95% Duration:2cycles 2 x (12 + 12 hours)	Measurement of insulation resistance before test; The test shall start with 25°C ±3°C and at least 95% humidity; Equipment operating during the complete first cycle and switched off during second cycle, except for functional test; Functional test during the first 2 hours of the first cycle at the test temperature and during the last 2 hours of the second cycle at the test temperature. Duration of the second cycle can be extended due to more convenient handling of the functional test. Recovery at standard atmosphere conditions; Insulation resistance measurements and performance test.

5.	Vibration	IEC 60068-2-6, Test Fc	2.0 (+3/-0) Hz to 13.2 Hz – amplitude ±1mm(0.039 in.) 13.2 Hz to 100 Hz – acceleration ±0.7 g For severe vibration conditions, e.g., on diesel engines, air compressors, etc.: 2.0 Hz to 25 Hz – amplitude ±1.6 mm (0.063 in.) 25.0 Hz to 100 Hz acceleration ±4.0 g Note: More severe conditions may exist for example on exhaust manifolds or fuel oil injection systems of diesel engines. For equipment specified for increased vibration levels, the vibration test shall be conducted at the agreed vibration level, frequency range and duration. Values may be required to be in these cases 40 Hz to 2000 Hz – acceleration ± 10.0g at 600 °C duration 90 min.	Duration: 90 minutes at 30 Hz in case of no resonance conditions; Duration: 90 minutes for each resonance frequency at which Q ≥ 2 is recorded; During the vibration test, functional tests shall be carried out; Tests to be carried out in three mutually perpendicular planes; It is recommended as guidance that Q does not exceed 5; Where sweep test shall be carried out instead of the discrete frequency test and a number of resonant frequencies are detected close to each other duration of the test shall be 120 min. Sweep over a restricted frequency range between 0.8 and 1.2 times the critical frequencies can be used where appropriate. Note: Critical frequency is a frequency at which the equipment being tested may exhibit: malfunction and/or

				performance deterioration mechanical resonances and/or other response effects occur, for example, chatter

TABLE 7.2.1 (continued)

Type Tests for Control, Monitoring and Safety Equipment

No	TEST	PROCEDURE ACCORDING. TO:	TEST PARAMETERS	OTHER INFORMATION
6.	Inclination	IEC 60092-504	Static 22.5°	Inclined at an angle of at least 22.5° to the vertical; Inclined to at an angle of at least 22.5° on the other side of the vertical and in the same plane as in (a); Inclined to at an angle of at least 22.5° to the vertical and in plane at right angles to that used in (a); Inclined to at an angle of at least 22.5° on the other side of the vertical and in the same plane as in (c) Note: The duration of testing in each position should be sufficient to fully evaluate the behavior of the equipment.
			Dynamic 22.5°	Using the directions defined in a) to d) above, the equipment is to be rolled to an angle of 22.5° each side of the vertical with a period of 10 seconds. The test in each direction is to be carried out for not less than 15 minutes Note: These inclination tests are normally not required for equipment with no moving parts.

			Rated supply voltage (V)	Test voltage (DC voltage) (V)	Min. Insulation	Insulation resistance test is to be carried out before and after:
					Before test (MΩ)	After test (MΩ)
7.	Insulation resistance	---	Un ≤≤65	2 x Un (min. 24 V)	10	1.0
			Un > 65	500	100	10

			Rated voltage Un (V)	Test voltage	
8.	High voltage	---	Up to 65	2 xUn	Separate circuits are to be tested against each other and all circuits connected with each other tested against earth; Printed circuits with electronic components may be removed during the test;
			66 to 250	1500	
			251 to 500	2000	

			501 to 690	2500	Period of application of the test voltage: one minute

TABLE 7.2.1 (continued)

Type Tests for Control, Monitoring and Safety Equipment

No	TEST	PROCEDURE ACCORDING. TO: [Refer Note 7]	TEST PARAMETERS	OTHER INFORMATION
9.	Cold	IEC 60068-2-1	Temperature: +5°C (41°F± 3°C (5.4°F) Duration: two hours Or Temperature: –25°C (–13°F) ± 3°C (5.4°F) Duration: two hours [Refer Note 2]	Initial measurement of insulation resistance; Equipment not operating during conditioning and testing, except for functional test; Functional test during the last hour at the test temperature; Insulation resistance measurement and the functional test after recovery
10.	Salt mist	IEC 60068-2-52 Test Kb	Four spraying periods with a storage of 7 days after each.	Initial measurement of insulation resistance and initial functional test; Equipment not operating during conditioning of the test specimen; Functional test on the 7th day of each storage period; Insulation resistance measurement and performance test: 4 to 6 hours after recovery [Refer Note 3] On completion of exposure, the equipment shall be examined to verify that deterioration or corrosion (if any) is superficial in nature.
11.	Electrostatic discharge	IEC 61000-4-2	Contact discharge: 6 kV Air discharge: 2 kV, 4 kV, 8 kV Interval between single discharges: 1 sec. Number of pulses: 10 per polarity According to test level 3.	To simulate electrostatic discharge as may occur when persons touch the appliance; The test shall be confined to the points and surfaces that can normally be reached by the operator; Performance Criterion B [Refer Note 4].

12.	Electro-magnetic field	IEC 61000-4-3	Frequency range: 80 MHz to 2 GHz Modulation*: 80% AM at 1000 Hz Field strength: 10 V/m Frequency sweep rate: ≤ 1.5 x 10-3 decades/s (or 1% / 3 sec) According to test level 3.	To simulate electromagnetic fields radiated by different transmitters; The test shall be confined to the appliances exposed to direct radiation by transmitters at their place of installation. Performance criterion A [Refer Note 5] *If for tests of equipment, an input signal with a modulation frequency of 1000 Hz is necessary, a modulation frequency of 400 Hz may be chosen.
13	Conducted Low Frequency		AC: Frequency range: rated frequency to 200th harmonic; Test voltage (rms): 10% of supply to 15th harmonic reducing to 1% at 100th harmonic and maintain this level to the 200th harmonic, minimum 3 V (rms), maximum 2 W DC: Frequency range: 50 Hz – 10 kHz; Test voltage (rms): 10% of supply, maximum 2 W	To simulate distortions in the power supply system generated, for instance, by electronic consumers and coupled in as harmonics; Performance criterion A[Refer Note 5] Refer Fig 1 below For keeping max. 2 W, the voltage of the test signal may be lower.
14.	Conducted Radio Frequency	IEC 61000-4-6	AC, DC, I/O ports and signal/control lines: Frequency range: 150 kHz – 80 MHz Amplitude: 3 V rms [Refer Note 6] Modulation ** : 80% AM at 1000 Hz Frequency sweep range: ≤1.5 x 10-3 decades/sec. (or 1% / 3 sec.) According to test level 2.	Equipment design and the choice of materials are to simulate electromagnetic fields coupled as high frequency into the test specimen via the connecting lines. Performance criterion A [Refer Note 5]. ** If for tests of equipment, an input signal with a modulation frequency of 1000 Hz is necessary, a modulation frequency of 400 Hz should be chosen.
15.	Electrical Fast Transients/ Burst	IEC 61000-4-4	Single pulse rise time: 5ns (between 10% and 90% value) Single pulse width: 50 ns (50% value) Amplitude (peak): 2 kV line on power supply port/earth; 1kV on I/O data control and communication ports (coupling clamp); Pulse period: 300 ms; Burst duration: 15 ms; Duration/polarity: 5 min According to test level 3.	Arcs generated when actuating electrical contacts; Interface effect occurring on the power supply, as well as at the external wiring of the test specimen; Performance criterion B [Refer Note 4].

16.	Surge	IEC 61000-4-5	Test applicable to AC and DC power ports Open-circuit voltage: Pulse rise time: 1.2 µs (front time) Pulse width: 50 µs (time to half value) Amplitude (peak): 1 kV line/earth; 0.5 kV line/line Short-circuit current: Pulse rise time: 8 µs (front time) Pulse width: 20 µs (time to half value) Repetition rate: ≥ 1 pulse/min Number of pulses: 5 per polarity Application: continuous According to test level 2.	Interference generated for instance, by switching “ON” or “OFF” high power inductive consumers;Test procedure in accordance with figure 10 of the standard for equipment where power and signal lines are identical; Performance criterion B [Refer Note 4].
17.	Radiated Emission	CISPR 16-2-3	For equipment installed in the bridge and deck zone: Frequency range: Quasi peak Limits: 0.15 – 0.3 MHz 80 – 52 dBµV/m0.3 – 30 MHz 52 – 34dBµV/m30 – 2000 MHz54dBµV/m except for: 156 – 165 MHz 24 dBµV/m For equipment installed in the general power distribution zone: Frequency range: Quasi peak Limits: 0.15 – 30 MHz 80 – 50 dBµV/m30 – 100 MHz 60 – 54 dBµV/m100 – 2000 MHz54dBµV/m except for: 156 – 165 MHz 24 dBµV/m	Procedure in accordance with the standard but distance 3 m (10 ft) between equipment and antenna Alternatively, the radiation limit at a distance of 3 m from the enclosure port over the frequency 156 MHz to 165 MHz shall be 30 dB micro-V/m peak.
18.	Conducted Emission	CISPR 16-2-1	Test applicable to AC and DC power ports For equipment installed in the bridge and deck zone: Frequency range: Limits: 10 – 150kHz 96 – 50 dBµV 150 – 350 kHz 60 – 50 dBµV 350 kHz – 30 MHz 50 dBµV For equipment installed in the general power distribution zone: Frequency range: Limits: 10 – 150 kHz 120 – 69 dBµV 150 – 500 kHz 79 dBµV 0.5 – 30 MHz 73 dBµV	
19.	Flame retardant	IEC 60092-101 or IEC 60695-11-5	Flame application: 5 times 15 sec each. Interval between each application: 15 sec. or 1 time 30 sec. Test criteria based upon application. The test is performed with the Equipment Under Test (EUT) or housing of the EUT applying needle-flame test method.	The burnt out or damaged part of the specimen by not more than 60 mm long. No flame, no incandescence or in the event of a flame or incandescence being present, it shall extinguish itself within 30 sec. of the removal of the needle flame without full combustion of the test specimen. Any dripping material shall

				extinguish itself in such a way as not to ignite a wrapping tissue.The drip height is 200 mm ± 5 mm.

Notes:

1 Equipment to be mounted in consoles, housing, etc., together with other equipment shall be tested with 70°C (158°F).

2 For equipment installed in non-weather protected locations or cold locations, test shall be carried out at –25°C (–13°F).

3 Salt mist test shall be carried out for equipment installed in weather exposed areas.

4 Performance criterion B (for transient phenomena): The equipment under test is to continue to operate as intended after the tests. No degradation of performance or loss of function is allowed, as defined in the technical specification published by the manufacturer. During the test, degradation or loss of function or performance which is self-recoverable is, however, allowed but no change of actual operating state or stored data is allowed.

5 Performance criterion A (for continuous phenomena): The equipment under test is to continue to operate as intended during and after test. No degradation of performance or loss is allowed, as defined in relevant equipment standard and the technical specification published by the manufacturer.

6 For equipment installed on the bridge and deck zone, the test levels shall be increased to 10 V rms for spot frequencies, in accordance with IEC 60945 at 2, 3, 4, 6.2, 8.2, 12.6, 16.5, 18.8, 22, 25 MHz.

7 Alternative equivalent testing procedures may be accepted, provided the requirements in the other columns are complied with.

8 When requested, equipment which has undergone the higher temperature and duration test will be recognized accordingly in the PDA certificate (Refer Appendix 1-1-A3 of the INTLREG *Rules for Conditions of Classification (Part 1)*). The purpose of introducing the optional 3HT test is for the convenience of equipment manufacturers should their clients request evidence that the equipment has been tested to the higher temperature requirements noted in Item 3A of the Table.

9 As used in this document, and in contrast to a complete performance test, a functional test is a simplified test sufficient to verify that the EUT has not suffered any deterioration caused by the individual environmental tests.

Test Set-up for Conducted Low Frequency Test

(Refer Test NO:13 of Table 7.2.1)

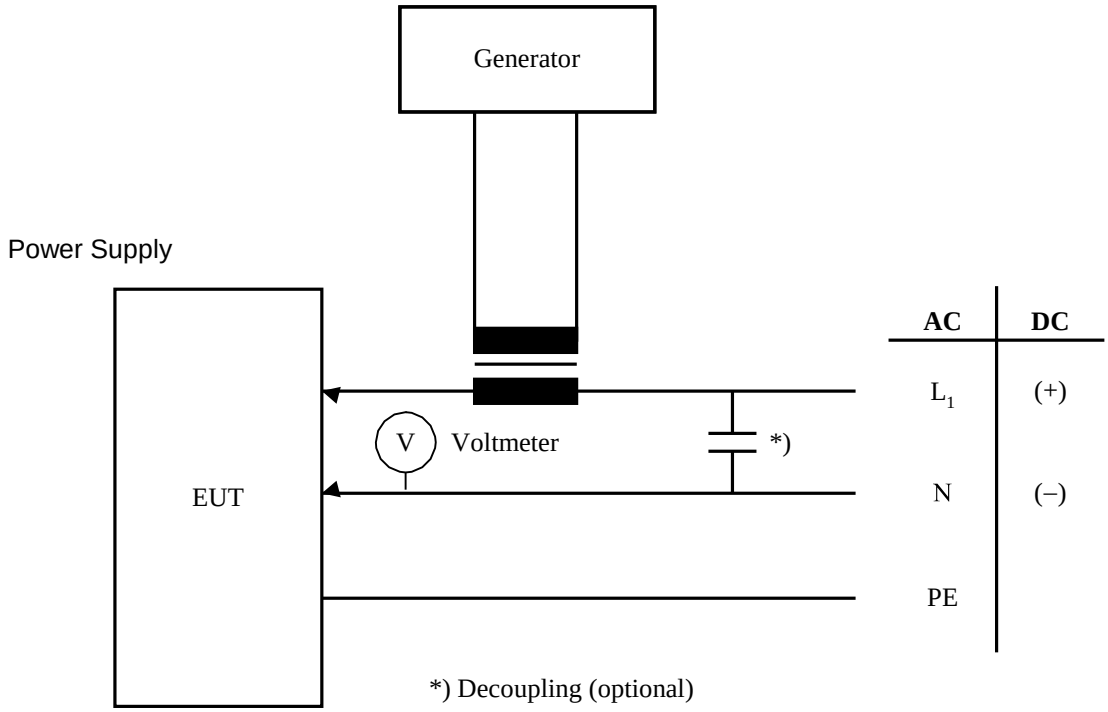

SECTION 3 AUTOMATIC OR REMOTE PROPULSION CONTROL AND MONITORING SYSTEMS

Contents

3.1 General

The requirements contained in this section are applicable to propulsion machinery/systems intended for automatic operation or operation from a remote propulsion control station. Except as noted herein, the requirements in Sections 1 & 2 as applicable, shall be complied with.

3.2 Propulsion Control Capability

Vessels with the keel laid or in similar stage of construction on or after 1 July 1998 are to meet the following requirements. Under all sailing conditions, including maneuvering, the speed, direction of thrust and, where applicable, the pitch of the propeller, shall be fully controllable from the remote propulsion control station. The remote control shall be performed by a single control device for each independent propeller, with automatic performance of all associated services, including, where necessary, means of preventing overload of the propulsion machinery.

3.3 Propulsion Control Orders and Indicators

Vessels with the keel laid or in similar stage of construction on or after 1 July 1998 are to meet the following requirements. Propulsion machinery orders from the navigation bridge shall be indicated in the main machinery control room and at the maneuvering platform. Refer Chapter 6 Sect 2[2.8]. The navigation bridge, main machinery control room and maneuvering platform shall be fitted with indication of the following:

- Propeller speed and direction of rotation in the case of fixed pitch propeller, or
- Propeller speed and pitch position in the case of controllable propellers.

3.4 Propulsion Control Command

The remote propulsion control stations in the propulsion machinery space as detailed in Sect 3[3.3] above , shall be capable of assuming control at all times and to block orders from other associated remote control stations, if fitted. Considerations will be given to cases where, due to the intended vessel's service and operational requirements, it may be necessary for other associated stations to have override controls over the remote propulsion control stations in the propulsion-machinery space. Refer Chapter 7 Sect 2[2.2.2] and Sect 2[2.2.3]

3.5 Propulsion Control Settings Deviation

Control transfer arrangements are to include means to prevent the propelling thrust from altering significantly when transferring control from one propulsion control station to another.Propulsion Control Power Failure

In the event of power failure of the propulsion control system, the propulsion units are to continue to operate at the last ordered speed and direction of thrust of the propellers until local control is in operation or control power is safely resumed, However, considerations will be given to special cases, where due to the intended vessel's propulsion design and operational requirements, it may be necessary to automatically reduce the propulsion engine speed and reset the propeller pitch to zero upon control power failure.

3.6 Propulsion Starting

3.6.1

An alarm shall be provided in the propulsion-machinery space and at any propulsion control station fitted outside of the propulsion-machinery space to indicate a low level starting condition which shall be set at a level to permit further main engine starting operations. Where automatic starting of the propulsion machinery is fitted, the number of consecutive attempts to automatically start an engine shall be limited in order to safeguard sufficient capacity for local starting from the propulsion-machinery space. Refer also Chapter 2 Sect 1[1.7]

3.6.2
Propulsion machinery control system shall be designed so that it will automatically inhibit the starting of the propulsion machinery where conditions exist which may damage the propulsion machinery, i.e., shaft turning gear engaged, insufficient lubricating oil pressure, etc.

3.7 Remote Override of Safety Provisions

Remote override of safety provisions shall not permitted for the following:

3.7.1
Shutdown of propulsion gas turbines upon failure or loss of the oil lubricating system. Refer Part 6-Chapter 8-S 4[4.1.3] of the *INTLREG Rules for Building and Classing Steel Vessels*.

3.7.2
Shutdown of prime-movers for propulsion and ship's service diesel-generators upon activation of overspeed mechanism. Refer Chapter 6 Sect 4[4.2.10] and Part 6- Chapter 2-Sect 4[4.5.5]of the *INTLREG Rules for Building and Classing Steel Vessels*. However, considerations will be given to specific cases where due to the vessel's design and operational requirements, it may be necessary to momentarily override the propulsion machinery over the over speed automatic shutdown.

3.7.3
Shutdown of prime-movers upon failure or loss of oil lubricating system to forced-lubricated propulsion or ship's service diesel-generators. Refer . Chapter 6 Sect 4[4.2.8]

3.8 Critical Speeds

Adequate means shall be provided at the remote propulsion control station to alert the station operator of prolonged operation of the propulsion drives within barred speed ranges.

3.9 Emergency Shutdown

The propulsion machinery shall be provided with an emergency stopping device on the navigation bridge which shall be independent of the navigation bridge control system.

3.10 Automatic Shutdown Alarm

If the control system automatically shuts down the main propulsion machinery for any reason, this shall be alarmed at the remote propulsion control station.

3.11 Automatic Propulsion Control System

3.11.1 Integrity and Manual Control Functions

The automatic propulsion control system shall be designed and arranged so that a failure in the system shall not to compromise the integrity nor the manual operation of the propulsion machinery.

3.11.2 Threshold Warning for Safety System Activations -

Where the propulsion machinery is capable of remote control from the navigation bridge, regardless of manned or unmanned machinery space, automation systems shall be designed in a manner such that a threshold warning of impending or imminent slowdown or shutdown of the propulsion system is given to the officer in charge of the navigational watch in time to assess navigational circumstances in an emergency.

In particular, the systems are to control, monitor, report, alert and take safety action to slow down or shut down propulsion while providing the officer in charge of the navigational watch an opportunity to manually intervene (override), except for those cases where manual intervention will result in total failure of the engine and/or propulsion equipment within a short time, for example, in the case of over speed.

3.12 Controls and Instrumentation on Remote Propulsion Control Stations

Remote propulsion control stations fitted in vessels having the propulsion-machinery space manned shall be provided with the controls, alarms and displays as listed in Chapter 7 Sect-4/Table 7.4. 2, as a minimum. This requirement shall not applicable to portable propulsion control units interconnected with and arranged for operation within sight from the associated remote propulsion control station.

3.13 Trials

3.13.1 Automatic/Remote Control

The ability to effectively control the propulsion from the remote propulsion control station shall be demonstrated to the satisfaction of the Surveyor during sea trials or at dockside. These trials are to include propulsion control transfer, propulsion starting, verification of propulsion control responses, propulsion control power failure and actuation of propulsion emergency stop device.

3.13.2 Independent Manual Control

Independent manual control of the propulsion machinery shall be demonstrated during the tests or trials to the satisfaction of the Surveyor. This is to include demonstration of independent manual control through the full maneuvering range and transfer from automatic control.

SECTION 4 VESSELS CLASSED WITH UM NOTATION

Contents

4.1 General

Vessels having the means to control and monitor the propulsion machinery and propulsion-machinery space from the navigation bridge and from a centralized control and monitoring station installed within, or adjacent to, a periodically unattended propulsion-machinery space are to comply with the requirements contained in this subsection. Except as noted herein, the requirements in Chapter 7 Sect 1 through Sect 3, as applicable, shall be complied with. The requirements in this subsection cover the operation required for propulsion machinery start-up, safe sailing during open sea and maneuvering conditions, and do not cover operations after anchoring or mooring.

4.2 Equipment

Equipment associated with the remote or automatic control and monitoring of the propulsion machinery is to comply with the following requirements.

4.2.1 Application

Requirements of Chapter 7 Sect 4[4.2] apply to equipment that are components of the control, monitoring and safety systems of propulsion machinery, propulsion boilers, vital auxiliary pumps and the electrical power generating plant, including its prime mover, for vessels to be assigned with UM

4.2.2 Environmental Test Conditions

Control, safety and monitoring equipment shall be designed such that it will successfully withstand the test conditions stipulated in Chapter 7 Sect 2 Table 7.2.1, as applicable.

Upon request by the manufacturer, equipment designed to environmental conditions in excess of those in Chapter 7 Sect 2 Table 7.2.1, may be tested to such conditions and certified accordingly.

4.2.3 Environmentally Controlled Space

Where equipment is designed to operate only in a temperature regulated environment, the temperature regulating system (such as air-conditioner) shall be backed up by a stand-by unit. Failure of the system shall be alarmed.

4.2.4 Electric and Electronic Equipment

Electric and electronic equipment that are components of control, safety and monitoring systems shall be designed and constructed in accordance with the provisions of Part 5B-7-2/[2.8].

4.2.5 Equipment Tests

4.2.5.1 Prototype Environmental Testing

The following tests shall be carried out as a prototype testing in the presence of the Surveyor:

i) Power supply variation test (item 1 in Chapter 7 Sect 2 Table 7.2.1,

ii) Vibration test (item 5 in Chapter 7 Sect 2 Table 7.2.1,

iii) Inclination test (item 6 in Chapter 7 Sect 2 Table 7.2.1,

Other prototype environmental tests specified in Chapter 7 Sect 2 Table 7.2.1, shall be conducted by the manufacturers. Acceptance will be based on review of the manufacturer's certified test reports by INTLREG. Omission of certain tests may be considered, taking into consideration the location of installation, functionality, contained devices, etc. of the equipment.

In general, field sensors (e.g., pressure transmitters) and field devices (e.g., solenoid valves), circuit breakers and cables may be exempted from the tests specified in Chapter 7 Sect 2 Table 7.2.1,

For computer-based systems, the equipment to be tested includes microprocessors, storage devices, power supply units, signal conditioners, analog/digital converters, computer monitors (visual display units), keyboards, etc., but may exclude printer, data recording or logging device not required in this section.

4.2.5.2 Production Unit Certification

After assembled to a complete assembly unit or subassembly unit, each production unit of equipment used in control, monitoring and safety systems shall be tested at the manufacturer's shop in the presence of the Surveyor to verify the tests in Chapter 7 Sect-4/.Table 7.4.1

4.2.5.3 Type Approval Program

At the request of the manufacturer, equipment, subassemblies or complete assemblies of control, monitoring and safety systems may be considered for Type Approval in accordance with the provisions of Part 1- Chapter 1-Sect 11 of the INTLREG *Rules for Conditions of Classification (Part 1)*. Where qualified, they may be listed on the INTLREG website as Type Approved Products.

Those products type-approved under Part1- Chapter 1-Sect 11 of the INTLREG *Rules for Conditions of Classification (Part 1)* will be acceptable, subject to renewal and updating of the certificates, without the need for the Surveyor's attendance at the production tests and inspections specified in Part 1- Chapter 1-Sect 11/[11.1.3.4ii)]. Production unit certification in such instances will be carried out as described in Part 1- Chapter 1-Sect 11[11.1.3.4(a)] of the above-referenced Part 1.

For the updating or renewal of type approval, please refer to Part 1- Chapter 1-Sect 11/[11.1.3.4d] of the INTLREG *Rules for Conditions of Classification (Part 1)*.

4.3 Automatic Propulsion Controls

Effective control of the propulsion machinery from the navigation bridge shall be performed with automatic performance of all associated functions, including, where necessary, means of preventing overload of the propulsion machinery. The required automatic control means to operate the propulsion machinery shall be capable of meeting load demands from standby to full system rated load under all operating conditions without the need for manual adjustment or manipulation.

4.4 Station in Navigation Bridge

The navigation bridge propulsion control station is to include the following: controls, displays and alarms (Refer also Chapter 7 Sect 4/Table 7.4. 2).

i) The means to alarm excessive rise of water in the propulsion-machinery space bilges.

ii) A summary-alarm for the propulsion and its associated machinery. Any of the alarm conditions as listed in Chapter 7 Sect 4/Table 7.4.4A through Chapter 7 Sect 4/Table 7.4. 7 is to activate the summary-alarm.

iii) Means of remote starting of any one of the main fire pumps unless the fire main is permanently pressurized.

4.5 Centralized Control and Monitoring Station

The centralized control and monitoring station is to include adequate controls, displays and alarms needed to maintain normal and safe operation of the propulsion machinery and monitor associated ship's service systems, electrical power generating machinery and propulsion-machinery space. The installed control and monitoring system is to provide the same degree of control as if the propulsion-machinery space was manned. Refer Chapter 7 Sect 4/Table 7.4. 3 through Chapter 7-Sect 4/Table 7.4.7 for required controls, alarms and displays to be fitted at such station.

4.6 Power Supply for Control and Monitoring Systems

4.6.1 General

The power supply arrangement shall be in accordance Chapter 7 Sect 2 [2.6.1.1] In addition, an emergency feeder or pipe shall be provided for control systems, display/alarm systems and safety systems.

4.6.2 Electrical

The emergency feeder as well as the main supply feeder for control systems, alarm/display systems and safety shall be connected to the emergency switchboard and main switchboard (distribution boards), respectively, and shall be provided with short-circuit protection at such boards. Their supply status shall be displayed at the remote propulsion stations.

4.6.3 Power Supply Transfer

Transfer of power supply for the systems shall be effected automatically. The power supply transfer device (switch or valve) shall be arranged for manual operation.

4.7 Continuity of Power

4.7.1 General

Provision shall be made for automatic starting and connecting to the main switchboard of a standby generator of sufficient capacity to permit propulsion and steering and to ensure the safety of the vessel with automatic restarting of the essential auxiliaries, including, where necessary, sequential operations. This standby electric power shall be available in no more than 45 seconds.

4.7.2 Reduced Power

To satisfy Sect 4[4.7.1] above, the operation of propulsion machinery and vital services may be at reduced power.

4.8 Automatic Transferring of Vital Auxiliary Pumps

The means for the automatic starting and transferring of required standby vital auxiliary pumps associated with propulsion shall be provided. The automatic starting and transferring of vital auxiliary pumps, where fitted shall be alarmed at the centralized control and monitoring station. The centralized control and monitoring station shall be provided with means to remotely start and stop vital auxiliary pumps associated with the following machinery/systems:

i) Propulsion Machinery

ii) Electrical Power Generating Machinery

iii) Controllable Pitch Propellers (C.P.P)

iv) *Fuel Oil Transfer or Service System.* This is applicable to pumps associated with settling and daily service tanks.

4.9 Propulsion Gas Turbines

The centralized control and monitoring station shall be provided with the safety provisions, alarms and displays as listed in Chapter 7 Sect 4/Table 7.4.5. Special consideration may be given for vessels in restricted service. Refer Part 6- Chapter 8-Sect 4[4.1.3] of the *INTLREG Rules for Building and Classing Steel Vessels*.

4.10 Propulsion Diesel Engines

4.10.1 Lubricating Oil

In the event of loss of lubricating oil, there shall be an automatic shutdown of the main engine.

4.10.2 Over speed

An over speed condition is to cause the automatic shutdown of the main engine.

4.10.3 Controls and Instrumentation

The centralized control and monitoring station shall be provided with the safety provisions, alarms and displays as listed in Chapter 7 Sect 4/Table 7.4.4A and Chapter 7 Sect 4/Table 7.4. 4B.

4.11 Electric Propulsion

For electric propulsion driven vessels, in order to prevent nuisance tripping of the main generator circuit breakers, a power management system shall be provided and arranged so that when the power requirement for the propulsion motors exceeds the on-line generating capacity, the power management system is to automatically take a corrective action, such as reduction of power, shedding of non-essential loads, etc. The centralized control and monitoring station shall be provided with the alarms and displays as listed in Chapter 7Sect 4/Table 7.4.6.

4.12 Electrical Power Generating Machinery

The centralized control and monitoring station shall be provided with the alarms and displays as listed in Chapter 7 Sect 4/Table 7.4.7.

4.13 Fuel Oil Settling and Daily Service Tanks

4.13.1 General

Low level conditions of fuel oil settling and daily service tanks shall be alarmed at the centralized control and monitoring station. Additionally, adequate interlock means to prevent tank over pressurization or overflow spillages shall be provided.

4.13.2 25.3 Automatic Filling

The fuel oil settling or daily service tanks shall be of a capacity sufficient for at least eight hours operation at normal power. The arrangements are to include high level alarm together with automatic filling pump shutdown and automatic pump start-up at a predetermined low level, in addition to the arrangements per Chapter 7 Sect 4[4.13.1] above

4.13.3 25.5 Heating Arrangements

Refer Chapter 7 Sect 4[4.15.2.3]

4.14 Propulsion and Associated Machinery Start-up

Starting of the propulsion and associated machinery or preparing the engines for sea may be performed manually, but if done automatically, this shall be programmed that the propulsion machinery cannot be started until all engine auxiliaries are functioning correctly.

4.15 Arrangement and Monitoring of Machinery Space

4.15.1 Bilges

4.15.1.1 General

4.15.1.1.1 The propulsion-machinery space shall be provided with a bilge water-level system to detect excessive water influx or rise in the propulsion-machinery space bilges at the various angles of vessel's heel and trim. The bilge wells shall be large enough to accommodate the normal drainage. Excessive water influx or rise in the bilge wells shall be alarmed at the centralized control and monitoring station. ships above 2000 gross tons, there should be two independent systems of bilge level detection in the machinery space, arranged such that each branch bilge is provided with a level detector. Refer Chapter 7 Sect 4/Table 7.4.2 and Chapter 7 Sect 4/Table 7.4.3 for alarms and displays.

4.15.1.2 Excessive Automatic Starting of Bilge Pumps

Where the bilge pumps are arranged to start automatically, means shall be provided to indicate at the centralized control and monitoring station when the influx of liquid is greater than the pump capacity or when the pump is operating more frequently than would normally be expected. Additionally, special attention shall be given to oil pollution prevention requirements.

4.15.2 Fire Prevention

To minimize the outbreak of fire, the following shall be provided:

4.15.2.1
In high pressure fuel-oil piping Refer Chapter 2 Sect 2[1.4.2] of these rules and Part 6-Chapter 8-Sect 4 [4.1.1.9] of the *INTLREG Rules for Building and Classing Steel Vessels*), an oil leakage condition shall be alarmed at the centralized control and monitoring station.

4.15.2.2
Drip trays for collecting oil, as required in Chapter 4 Sect 1[1.5.13], shall be of suitable height and provided with suitable drainage to a collecting tank incorporating a high level alarm audible at the centralized control and monitoring station.

4.15.2.3
Where heaters are provided in fuel systems, the required alarms in Chapter 4 Sect 4[4.1.3] shall be located at the centralized control and monitoring station.

4.15.2.4
Fuel oil heaters, purifiers, pumps and filters shall be shielded or grouped in a special room or location ventilated by suction.

4.15.3 Fire Detection and Alarm

4.15.3.1 General

The propulsion-machinery space shall be provided with a fixed fire detection and alarm system complying with Regulation II-2/7.4 of SOLAS 1974, as amended. This fixed fire detection and alarm system may be combined with other fire detection and alarm systems required onboard the vessel. The fire control panel shall be located on the navigation bridge or in the fire fighting station. If located in the fire fighting station, a repeater panel shall be fitted on the navigation bridge. Propulsion machinery space fire shall be alarmed in the centralized control station.

4.15.3.2 Temporarily Disconnecting Alarms

A fire detector loop or detector(s) covering the unattended machinery space may be temporarily disabled, for example, for maintenance purposes and such action shall be clearly indicated at the fire control panel and at the centralized control station described in Sect 4[4.15.3.1] above Disabled loop or detectors shall be reactivated automatically after a preset time period.

4.16 Monitoring Station in Engineers' Accommodation

The following is applicable to vessels fitted with engineers' accommodations.

4.16.1 General

At least one alarm monitoring station shall be provided in the engineers' public spaces, such as the officers' lounge or officers' mess room. Where the engineer on-duty is assigned to work in a specific space, such as the ship's office or engineers' office, then such a space is also to be provided with an alarm monitoring station. Each such station shall be provided with alarms for fire, high bilge-water level in the propulsion-machinery space, and summary-alarms for the propulsion and its associated machinery Any of the alarm conditions as listed in Chapter 7Sect 4/Table 7.4.4A through Chapter 7 Sect 4/Table 7.4.7, as applicable, are to activate the specific machinery summary-alarm. Additionally, alarm monitoring stations through a selector switch shall be provided in each individual engineer's stateroom and arranged so that at least one alarm monitoring station is active at all times. Selective switching shall not to be provided for the fire alarms. The fire alarm shall be separate and distinct from the alarms of any other systems. Fire, high bilge-water level and the specific machinery summary-alarms shall be audible in the engineers' public spaces and staterooms until manually silenced at the centralized control and monitoring station in the propulsion-machinery space.

4.16.2 Alternative Arrangement

The arrangements in Sect 4[4.16.1] above may be modified to permit the audible machinery summary-alarm and high bilge water level alarm to be silenced locally at the alarm monitoring stations in the engineers' public spaces and staterooms, provided the associated visual alarm shall not extinguished. Also, the arrangements shall be such that if the audible alarm shall not also silenced manually at the centralized control and monitoring station in a reasonable period of time, the system is to activate the engineers' alarm audible in the engineers' accommodations. The means for silencing locally at the alarm monitoring stations shall not to be provided for fire alarms.

4.17 Firefighting Arrangements for Propulsion Machinery Space Fires

4.17.1 Location

The firefighting arrangements shall be centralized in a location outside of the propulsion-machinery space.

4.17.2 Fire-fighting Controls

Firefighting arrangements shall be provided with remote manual controls for the operations detailed in the following list. These controls shall be capable of being tested to the satisfaction of the Surveyor.

4.17.2.1

Stopping of ventilation fans serving the machinery-space. Refer Chapter 6 Sect 2[2.10.1.1]

4.17.2.2

Stopping of fuel oil, lubricating oil and thermal oil system pumps. Refer Chapter 6 Sect

2[2.10.1.2]

4.17.2.3
Stopping of forced and induced draft fans of boilers, inert gas generators and incinerators, and of auxiliary blowers of propulsion diesel engines. Refer Chapter 6 Sect 2[2.10.1.2]

4.17.2.4
Closing propulsion-machinery space fuel oil tanks suction valves. Chapter 5 Sect 1[1.3.3]

4.17.2.5
Closing machinery-space skylights, openings in funnels, ventilator dampers and other openings.

4.17.2.6
Closing machinery-space watertight and fire-resistant doors. Self-closing doors with no hold-back arrangements may be excluded.

4.17.2.7
Starting the emergency generator or connecting a source of emergency power, unless automatic operation is provided.

4.17.2.8
Operation of a fire pump located outside of the propulsion-machinery space, including associated valves necessary to deliver the required capacity to the fire main. However, valves located near the pump need not be provided with remote operation from the fire fighting station if they are kept locked open (LO) or closed (LC), as appropriate, to provide immediate water supply to the fire main. The position of the valves (open or closed) shall be clearly marked. Where the sea chest valve is located in the same compartment as the fire pump and the sea chest valve is kept locked open, a high-level bilge alarm shall be fitted in the fire pump space. If the sea chest is located in a different space than the compartment containing the fire pump, then a high-level bilge alarm shall be fitted in the fire pump space, as well as the compartment containing the sea chest, in order to detect possible flooding in each of these spaces. The high-level bilge alarm is to sound in the centralized control station.

4.17.2.9
Releasing of the fire-fighting media for the propulsion-machinery space. This release shall be manual and not initiated automatically by signals from the fire-detecting system.

4.17.2.10
Shutdown of fixed local application fire fighting systems, Refer Chapter 5 Sect 2[2.5.1] before activation of a high-expansion foam fire extinguishing system.

4.17.3 Fire Detection and Alarm Systems

Refer Chapter 7 Sect 4[4.15.3]

4.17.4 Fire Alarm Call Points

Manually operated fire alarm call points shall be provided in, and in the passageways leading to, the propulsion-machinery space.

4.18 Communications

The communication system required by Chapter 7 Sect 2[2.7] is to include the engineer's accommodations area, if provided.

4.19 Sea Trials

In addition to the requirements in Chapter 7 Sect 3[3.13], effective operation of the following shall be

demonstrated to the satisfaction of the Surveyor. With the exception of Chapter 7 Sect 4[4.19.5], it is recommended that these demonstrations or tests be carried out before sea trials and are to include simulated failures so that proper corrective actions may be carried out and witnessed by the Surveyor.

4.19.1 Automatic or Remote Control and Monitoring System for Propulsion Machinery and Electrical Power Generating Machinery

In addition to the verification of required control responses, alarms and displays, this demonstration is to include the automatic transferring of the required standby vital auxiliary pumps.

4.19.2 Local Control

Local control of the propulsion machinery shall be demonstrated.

4.19.3 Fire Control and Alarm System

In addition to the verification of required detectors, displays and call points and where the fire main shall not maintained pressurized, it shall be demonstrated that at least one of the main fire pumps can be started from the station in the navigation bridge.

4.19.4 Bilge Detection System

Where provided, automatic starting of the propulsion-machinery space bilge pumps shall be demonstrated.

4.19.5 Operational Test of Propulsion Machinery

After the propulsion machinery has been running for at least two hours, the ability to control the machinery functions correctly for all loads and engine maneuvers without any manual intervention in the propulsion- machinery space shall be demonstrated for an additional period of four hours. Propulsion machinery or engine response to throttle control demands shall be tested during the trials and after final adjustments to demonstrate that no part of the plant or engine is jeopardized by the rate at which the throttle is moved from one extreme position to the other. The loss of electric power shall be simulated with the main engine running.

TABLE 7.4.1
Tests for Unit Certification of Control, Monitoring and Safety Equipment

No	TEST	PROCEDURE ACCORDING. TO: [Refer Note]	TEST PARAMETERS	OTHER INFORMATION
1.	Visual inspection	---	---	Conformance to drawings, design data Quality of workmanship and construction
2.	Performance test	Manufacturer's performance test program based upon specification and relevant Rule requirements. When the EUT is required to comply with an international performance standard (e.g., protection relays), verification of requirements in the standard shall be part of the performance testing required in this initial test and subsequent performance tests after environmental testing where required by Table 7.2. 1.	Standard atmosphere conditions Temperature: 25°C (77°F) ± 10°C (18°F) Relative humidity: 60%±30% Air pressure: 96 kPa (0.98 kgf/cm2, 13.92 psi) ±10 kPa (0.10 kgf/cm2, 1.45 psi)	Confirmation that operation is in accordance with the requirements specified for particular systems or equipment; Checking of self-monitoring features; Checking of specified protection against an access to the memory; Checking against effect of unerroneous use of control elements in the case of computer systems.
3.	External Power supply failure	---	3 interruptions during 5 minutes; switching-off time 30 s each case	The time of 5 minutes may be exceeded if the equipment under test (EUT) needs a longer time for startup, for example, booting sequence. For equipment which requires booting, one additional power supply interruption during booting shall be performed. Verification of: the specified action of equipment upon loss and restoration of supply; possible corruption of program or data held in programmable electronic systems, where applicable.

Note: Alternative equivalent testing procedures may be accepted, provided the requirements in the other columns are complied with.

TABLE 7.4.2
Control Station in Navigation Bridge (Applicable to All Classed Vessels)

Item			Alarm (), 9)	Display (12)	Provisions of Device on Station (1)	Remarks
Required for All Vessels (8)						
Control and Monitoring System	A1	Failure or malfunctioning of system	x			Refer Notes 2, 10.
	A2	Failure, power supply	x	Main/Standby		Refer Note 2 For non-UM vessels, the failure alarm is applicable to main power source only. For UM vessels, applicable to main and emergency power sources. Automatic transfer for UM vessels only.
	A3	Failure, individual power supply to control, monitoring and safety systems	x	x		Refer Notes 2, 10.
	A4	Control station in operation		Station		
	A5	Control transfer acknowledgement switch			x	
	A6	Alarm, disabled (override)		Disabled		Refer Note 4.
	A7	Safety, activation	x			Refer Notes 3, 10.
	A8	Safety disabled	x	Disabled		Refer Notes 4, 10.
	A9	Threshold warning for safety system activations	x			For navigation bridge only
Propulsion, General	B1	Remote controls			x	For each propelling unit and all units, as applicable
	B2	Propeller shaft, speed		Speed		Refer Note 11.
	B3	Propeller shaft, direction		Direction		Refer Note 11.
	B4	Propeller, pitch		Pitch		For controllable-pitch propeller Refer Note 11.
	B5	Telegraph or similar			x	Refer Note 11.
Propulsion, propulsion Starting	C1	Starting medium, pressure or level, low	x	Pressure or level		Refer Note 5.
	C2	Hazardous condition present	x			Refer Chapter 7Sect 3[3.6.2]
Emergency Shutdown	D1	Propulsion			x	Refer Chapter 7Sect 3[3.9]
Required for UM Classed Vessels						
Propulsion	E1	Prime movers, prolonged operation within critical speed range	x			Visual display may be acceptable
Fire Pump	F1	Start/stop switch			x	Not required if the fire main is maintained pressured

Propulsion, Starting	G1	Start/stop switch for starting system			x	Not required for non-reversing engines
Controllable-Pitch Propeller (CPP)	H1	Start/stop switch for CPP hydraulic motor			x	If provided
	H2	CPP hydraulic motor running		Running		If provided
	H3	Automatic starting of required standby pump	x			If provided
Electric Propulsion	I1	Propulsion generator load- share overload	x			Refer Chapter 6 Sect 4[4.2.11.3] Chapter 6 Sect 4[4.2.12.3] and Chapter 7 Sect 4[4.10]
Summary-alarms	J1	Propulsion and associated machinery failure	x			Refer Notes 6, 7.
Bilges In Machine Space	K1	Level, bilges, high	x			Refer Chapter 7 Sect 4[4.15.1.1]
Fire in Machinery Space	L1	Fire control panel	x	Fire	x	Solas II-2/7.4 (1974)and Chapter 7 Sect 4[4.15.3]
Vital Auxiliary Pumps	M1	Start/stop and transfer switches			x	For UM vessels having non- integrated propulsion machinery

Notes:

1 Required actuation device or alarm is denoted by a (x).

2 For each system: control systems, alarm/display systems and safety systems. Refer Chapter 7 Sect 2[2.6.1.1] and Chapter 7 Sect 4[4.6]

3 Actuation of propulsion safeties is to either reduce output or shutdown the propulsion machinery, as required. Refer Chapter 7 Sect 2[2.4] , Chapter 7 Sect 3[3.7] and Chapter 7Sect 4/Table 7.4.4A through Chapter 7 Sect 4/Table 7.4.7.

4 Deactivation means shall be arranged so that such action cannot be done inadvertently. Alternative means to indicate disabling of safety actions or alarms will be considered.

5 This alarm is also to be provided in the machinery space.

6 This summary-alarm shall be activated by any of the alarm conditions as listed in Chapter 7 Sect 4/Table 7.4.4A through Chapter 7 Sect 4/Table 7.4.7.. Refer Chapter 7 Sect 4 [4.16]

7 These alarms are also to be alarmed at the engineer's accommodations, Refer Chapter 7 Sect 4 [4.16]

8 The listed instrumentation is also applicable to other remote propulsion control stations installed outside of the navigation bridge. Refer Chapter 7 Sect 3 [3.12]

9 Provided the audible alarms reactivate automatically after a preset time, audible alarms may be bypassed or deactivated during machinery start-up.

10 May be arranged as a summary-alarm (common).

11 To be provided also at the maneuvering platform.

Display of the analog or digital signal for the monitored parameter. The display of the signal is to provide indication of the monitored parameter in engineering units (such as degrees, PSI, RPM, etc.) or status indication. The engineering unit is to effectively display the relevant information concerning the monitored parameter. An alternative engineering unit which provides equivalent effectiveness, may be considered.

TABLE 7.4.3

Centralized Control and Monitoring Station (Applicable to CCS or UM Vessels)

Item			Alarm (1, 6)	Display (7)	Provisions of Device on Station (1)	Remarks
Control and Monitoring System	A1	Failure or malfunctioning of system	x			Refer Notes 2, 5.
	A2	Failure, supply	x	Main/Standby		Automatic transfer to standby supply (2, 5)
	A3	Control station in operation		Station		
	A4	Control transfer acknowledgement switch			x	
	A5	Control power available, pressure or level		Pressure/Level		Refer Note 5.
	A6	Alarm, disabled (override)		Disabled		Refer Notes 4, 5.
	A7	Safety, activation	x			Refer Notes 3, 5.
	A8	Safety disabled	x	Disabled		Refer Notes 4, 5.
	A9	Safety, disabled (override) switch			x	Refer Chapter 7 Sect 2 [2.4.6]
Propulsion, General	B1	Remote controls			x	
	B2	Propeller shaft, speed		Speed		Refer Note 5.
	B3	Propeller shaft, direction		Direction		Refer Note 5.
	B4	Propeller, pitch		Pitch		For controllable-pitch propeller (6)
	B5	Prime movers, critical speed	x			Visual display may be acceptable (6)
	B6	Engine order telegraph or similar			x	Not applicable to certain vessels < 500 GT. Chapter 6 Sect 2 [2.8.1.2]
Propulsion, Starting	C1	Starting medium, pressure or level, low	x	Pressure or Level		Refer Note 5.
	C2	Hazardous condition present	x			Refer Chapter 7 Sect 3 [3.7.3]
Diesel Propulsion	D1	Alarms and displays				Refer Chapter 7Sect-4/Table 7.4.4A & B
Gas Turbine Propulsion	E1	Alarms and displays				Refer Chapter 7 Sect 4/Table 7.4.5
Electric Propulsion	F1	Alarms and displays				Refer Chapter 7 Sect 4/Table 7.4.5
	F2	Propulsion generator load- share overload	x			Refer Chapter 6 Sect 4[4.2.11.3], Chapter 6 Sect 4[4.2.12.3],and Chapter 7Sect 4[4.10]

Elect. Gen. Machinery	G1	Alarms and displays				Refer Table 7.4. 7
FO Settling and Daily Service Tanks	H1	Level, tank, low	x			Refer Note 5.
	H2	Level, tank, high	x			If automatic filling provided (5)
	H3	Oil temperature, high or oil flow, low	x			Includes L.O. systems (5)
FO and LO Collect. Tank	I1	Level, tank, high	x			Refer Chapter 7 Sect 4[4.15.2.2]
High Pres. FO System	J1	Leakage	x			Refer Chapter 7 Sect 4[4.15.2.1]
LO Stern Tube Tank	K1	Level, oil, low	x			Refer Note 5.
Bilges in Machinery Space	L1	Level, bilges, high	x			Refer Part 6- Chapter 8- Sect 4[4.1.1.2]
	L2	Excessive running of bilge pump motor	x			If auto, starting provided. Refer Part 6- Chapter 8- Sect 4[4.1.12.2]

Notes:

1 Required actuation device or alarm is denoted by a (x).

2 For each system: control systems, alarm/display systems and safety systems. Refer . Chapter 7 Sect 2[2.6.1.1] and Chapter 7 Sect 4[4.6]

3 Actuation of propulsion safeties is to either reduce output or shutdown the propulsion machinery, as required. Refer Chapter 7 Sect -4/Table 7.4. 4A through Chapter 7 Sect 4/Table 7.4.7.

4 Deactivation means shall be arranged so that such action cannot be done inadvertently. Alternative means to indicate disabling of safety actions or alarms will be considered.

5 For **UM** vessels, only these items and the alarms and displays per Chapter 7 Sect -4/Table 7.4. 4A through Chapter 7 Sect 4/Table 7.4.7, as applicable, need to be provided on such station.

6 Provided the audible alarms reactivate automatically after a preset time, audible alarms may be bypassed or deactivated during machinery start-up.

7 Display of the analog or digital signal for the monitored parameter. The display of the signal is to provide indication of the monitored parameter in engineering units (such as degrees, PSI, RPM, etc.) or status indication. The engineering unit is to effectively display the relevant information concerning the monitored parameter. An alternative engineering unit which provides equivalent effectiveness, may be considered.

TABLE 7.4.4A

Monitoring of Propulsion Machinery – Slow Speed (Crosshead) Diesel Engines (Refer also Part 5B- Chapter **7-Sect 4/Table 7.4 3)**

Item (11)			Alarm (1)	Display (16)	Automatic Start of Required Standby Vital Auxiliary Pump with Alarm (1)	Remarks (12)
Fuel Oil System	A1	Fuel oil after filter (engine inlet) pressure – low	x	Pressure	x	Refer Note 3.
	A2	Fuel oil before injection pumps, temperature – high (or viscosity – low), and Fuel oil before injection pumps, temperature – low (or viscosity – high)	x			
	A3	Leakage from high pressure pipes	x			
	A4	Fuel oil in daily service tank, low- level	x			Refer also Chapter 7 Sect 4[4.13]
	A5	Common rail fuel oil pressure – low	x			
Lube Oil System	B1	Lube oil to main bearing and thrust bearing, pressure-low	x	Pressure	x	Refer Notes 2, 3, 4.
	B2	Lube oil to crosshead bearing, pressure – low	x	Pressure	x	Refer Notes 2, 3, 4, 5.
	B3	Lube oil to camshaft, pressure – low	x		x	Automatic engine shutdown (3, 4, 5)
	B4	Lube oil to camshaft, temperature – high	x			Refer Note 5.
	B5	Lube oil inlet, temperature – high	x			
	B6	Thrust bearing pads or Bearing outlet, excessive temperature – high	x			Automatic engine shutdown/shutdown (2, 3)

	B7	Oil mist in crankcase, mist concentration – high; or Bearing temperature - high; or Alternative arrangements	x			Automatic engine shutdown (2, 6)
	B8	Flow rate cylinder lubricator, flow – low. Each apparatus	x			Automatic engine slowdown (2)
	B9	Lubricating tanks, level – low	x			Refer Note 7.
	B10	Common rail servo oil pressure – low	x			
Turbocharger System	C1	Lube oil inlet, pressure – low	x			Refer Note 13
	C2	Lube oil outlet (each bearing), temperature – high	x			Refer Note 14
	C3	Turbocharger speed		Speed		
Piston Cooling System	D1	Coolant inlet, pressure – low	x		x	Automatic engine slowdown (2, 3, 8)
	D2	Coolant outlet (each cylinder), temperature – high	x			Automatic engine slowdown (2)
	D3	Coolant outlet (each cylinder), flow – low	x			engine slowdown (2, 15)
	D4	Coolant in expansion tank, level – low	x			
S. W. Cooling	E1	Sea water cooling, pressure – low	x		x	Refer Note 3.

TABLE 7.4.4A (continued)
Monitoring of Propulsion Machinery –Slow Speed (Crosshead) Diesel Engines (Refer also Chapter **7Sect 4/Table 7.4. 3)**

Item (11)			Alarm (1)	Display (16)	Automatic Start of Required Standby Vital Auxiliary Pump with Alarm (1)	Remarks (12)
Cylinder Fresh Cooling Water System	F1	Water inlet, pressure-low	x		x	Automatic engine slowdown (2, 3)
	F2	Water outlet (for each cylinder), temperature-high, or Water outlet (general), temperature-high	x			Automatic engine slowdown (2, 9)
	F3	Oily contamination of engine cooling water system	x			Refer Note 10.
	F4	Cooling water in expansion tank, level – low	x			
Air System	G1	Starting air before main shut-off valve, pressure – low				Refer item C1 in Chapter 7Sect 4/Table 7.4.3
	G2	Control air, pressure – low	x			
	G3	Safety air, pressure – low	x			
Scavenge Air Systems	H1	Scavenge air receiver		Pressure		
	H2	Scavenge air box, temperature – high (fire)	x			Automatic engine shutdown (2)
	H3	Scavenge air receiver water, level – high	x			
Exhaust Gas System	I1	Exhaust gas after each cylinder, temperature – high	x	Temp.		Automatic engine slowdown (2)
	I2	Exhaust gas after each cylinder, deviation from average, temperature – high	x			
	I3	Exhaust gas before each T/C, temperature – high	x	Temp.		
	I4	Exhaust gas after each T/C, temperature – high	x	Temp.		

Fuel Valve Coolant	J1	Fuel valve coolant, pressure – low	x		x	Refer Note 3.
	J2	Fuel valve coolant, temperature – high	x			
	J3	Fuel valve coolant in expansion tank, level – low	x			
Engine	K1	Engine speed/direction of rotation		Speed/rotation		
	K2	Engine over speed	x			Automatic engine shutdown (3)
	K3	Direction of rotation – Wrong way	x			
Power Supply	L1	Control, alarm or safety system, power supply	x			

Notes:

1 Required alarm or starting of standby pump is denoted by a (x).

2 A common sensor for alarm/display and automatic slowdown is acceptable.

3 Separate sensors are required for *a)* alarm/automatic starting of required standby pump, and *b)* automatic engine shutdown.

4 Automatic engine shutdown shall be alarmed and effected upon loss of oil pressure.

5 If separate lube oil systems are installed.

6 For engines having a power of 2250 kW (3000 hp) and above or having a cylinder bore of more than 300 mm (11.8 in.).

7 Where separate lubricating oil systems are installed (e.g., camshaft, rocker arms, etc.), individual level alarms are required for the tanks.

8 The slowdown shall not required if the coolant is oil taken from the main cooling system of the engine.

9 Where one common cooling space without individual stop values is employed for all cylinder jackets.

10 Where main engine cooling water is used in fuel and lubricating oil heat exchangers.

11 For **UM** vessels having integrated propulsion machinery, exemption from the listed instrumentation and safety provisions will be considered.

12 Instead of automatic slowdown, manual slowdown will be acceptable, provided visual/audible alarm with illumination sign “Reduced Power” is located in the navigation bridge.

13 Unless provided with a self-contained lubricating oil system integrated with the turbocharger.

14 Where outlet temperature from each bearing cannot be monitored due to the engine/turbocharger design alternative arrangements may be accepted. Continuous monitoring of inlet pressure and inlet temperature in combination with specific intervals for bearing inspection in accordance with the turbocharger manufacturer's instructions may be accepted as an alternative.

15 Where outlet flow cannot be monitored due to engine design, alternative arrangements may be accepted.

16 Display of the analog or digital signal for the monitored parameter. The display of the signal is to provide indication of the monitored parameter in engineering units (such as degrees, PSI, RPM, etc.) or status indication. The engineering unit is to effectively display the relevant information concerning the monitored parameter. An alternative engineering unit which provides equivalent effectiveness, may be considered.

TABLE 7.4.4 B
Monitoring of Propulsion Machinery – Medium/High Speed (Trunk Piston) Diesel Engines
(Refer also Chapter 7Sect 4/Table 7.4. 3))

Item (11)			Alarm (1)	Display (14)	Automatic Start of Required Standby Vital Auxiliary Pump with Alarm (1)	Remarks (12)
Fuel Oil System	A1	Fuel oil after filter (engine inlet), pressure – low	x	Pressure	x	Refer Note 3
	A2	Fuel oil before injection pumps, temperature – high (or viscosity – low), and Fuel oil before injection pumps, temperature – low (or viscosity – high)	x			Refer Note 5
	A3	Leakage from high pressure pipes	x			
	A4	Fuel oil in daily service tank, level – low	x			Refer Chapter 7 Sect 4[4.13]
	A5	(2010) Common rail fuel oil pressure – low	x			
Lube Oil System	B1	Lube oil to main bearing and thrust bearing, pressure – low	x	Pressure	x	Automatic engine shutdown (3, 4)
	B2	(1998) Lube oil filter differential, pressure – high	x	Pressure	x	Refer Note 3
	B3	Lube oil inlet, temperature – high	x	Temp.		
	B4	(2009) Oil mist in crankcase, mist – concentration high; or Bearing temperature – high; or Alternative arrangements	x			Automatic engine shutdown (6)
	B5	Flow rate cylinder lubricator, flow – low. Each apparatus	x			Automatic engine slowdown (2, 10)
	B6	(2010) Common rail servo oil pressure – low	x			

Turbocharger	C1	Turbocharger lube oil inlet, pressure – low	x	Pressure		Refer Note 7
	C2	(2013) Turbocharger oil outlet temp., each bearing – high	x	Temp.		Refer Note 13
S. W. Cooling	D1	Sea water cooling, pressure – low	x	Pressure	x	Refer Note 3
Cylinder Fresh Cooling Water System	E1	Water inlet, pressure-low or flow – low	x	Press. or flow	x	Automatic engine slowdown (2, 3)
	E2	Water outlet (general), temperature – high	x	Temp.		Automatic engine slowdown (8)
	E3	Cooling water in expansion tank, level – low	x			
Air System	F1	Starting air before main shut-off valve, pressure – low				Refer item C1 Chapter 7Sect 4/Table 7.4. 3)
	F2	Control air, pressure – low	x	Pressure		
Scavenge Air System	G1	Scavenge air receiver, temperature – high	x			
Exhaust Gas System	H1	Exhaust gas after each cylinder, temperature – high	x	Temp.		Automatic engine slowdown (2, 9)
	H2	Exhaust gas after each cylinder, deviation from average, temperature – high	x			Refer Note 9
Engine	I1	Engine speed		Speed		
	I2	Engine over speed	x			Automatic engine shutdown (3)
Power Supply	J1	Control, alarm or safety system, power supply failure	x			

Notes:

1 Required alarm or starting of standby pump is denoted by a (x).

2 A common sensor for alarm/display and automatic slowdown is acceptable.

3 Separate sensors are required for *a)* alarm/automatic starting of required standby pump, and *b)* automatic engine shutdown.

4 Automatic engine shutdown shall be alarmed and effected upon loss of oil pressure.

5 For heavy fuel oil burning engines only.

6 For engines having a power of 2250 kW (3000 hp) and above or having a cylinder bore of more than 300 mm (11.8 in.). Single sensor having two independent outputs for initiating alarm and for shutdown will satisfy for independence of alarm and shutdown..

Unless provided with a self-contained lubricating oil system integrated with the turbocharger.

7 Two separate sensors are required for alarm and slowdown.

8 For engine power > 500 kW/cyl.

9 If necessary for the safe operation of the engine.

10 For **UM** vessels having integrated propulsion machinery, exemption from the listed instrumentation and safety provisions will be considered.

11 Instead of automatic slowdown, manual slowdown will be acceptable, provided

visual/audible alarm with illumination sign “Reduced Power” is located in the navigation bridge.

12 Where outlet temperature from each bearing cannot be monitored due to the engine/turbocharger design alternative arrangements may be accepted. Continuous monitoring of inlet pressure and inlet temperature in combination with specific intervals for bearing inspection in accordance with the turbocharger manufacturer’s instructions may be accepted as an alternative.

Display of the analog or digital signal for the monitored parameter. The display of the signal is to provide indication of the monitored parameter in engineering units (such as degrees, PSI, RPM, etc.) or status indication. The engineering unit is to effectively display the relevant information concerning the monitored parameter. An alternative engineering unit which provides equivalent effectiveness, may be considered.

TABLE -7.4.5

Monitoring of Propulsion Machinery – Gas Turbine (Refer also **Chapter 7Sect 4/Table 7.4. 3)**

Item			Alarm (1)	Display (6)	Automatic Starting of Required Standby Pump (1,5),	Remarks
Lube Oil (2)	A1	Pressure, low	x	Pressure	x	
	A2	Pressure, low-low	x			Turbine automatic shutdown (3)
	A3	Temperature, inlet – high	x	Temperature		
	A4	Differential pressure, filter – high	x			
	A5	Level, tank – low	x			In gravity tank and sump
Bearings	B1	Temperature – high	x			Main bearings
Cooling Medium	C1	(2013) Pressure or flow – low	x	x		
	C2	Temperature – high	x			
Fuel	D1	Pressure or flow – low	x	Pressure or flow		
	D2	Temperature – low or viscosity – high	x	Temperature or Viscosity		For heavy fuel
	D3	(1999) Temperature – high or viscosity – low	x			For heavy fuel
	E1	Temperature – high	x	Temperature		

Exhaust Gas	E2	Temperature – high-high	x			Turbine automatic shutdown (3)
	E3	Temperature deviation – high	x			
Turbine	F1	Vibration level – high	x			
	F2	Vibration level – high-high	x			Turbine automatic shutdown (3)
Rotor	G1	Axial displacement – high	x			
	G2	Axial displacement – high-high	x			Turbine automatic shutdown (3,4)
	G3	Overspeed	x			Turbine automatic shutdown
Automatic Starting	H1	Failure	x			
Ignition and Flame	I1	Failure	x			Turbine automatic shutdown (3)
Compressor	J1	Pressure, inlet – low	x			
	J2	Pressure, inlet – low-low	x			Turbine automatic shutdown (3)
Control System	K1	Failure	x			

Notes:

1 Required alarm or starting of standby pump is denoted by a (x).

2 Individual alarms are required where separate systems (e.g., reduction gear, bearing, etc.) are installed.

The automatic shutdown shall be effected upon reaching the preset level (high-high or low-low, where applicable) or the event.

3 Automatic shutdown shall not required where roller bearings are provided.

4 For **UM** vessels having non-integrated propulsion machinery, starting of required standby pump shall be alarmed.

Display of the analog or digital signal for the monitored parameter. The display of the signal is to provide indication of the monitored parameter in engineering units (such as degrees, PSI, RPM, etc.) or status indication. The engineering unit is to effectively display the relevant information concerning the monitored parameter. An alternative engineering unit which provides equivalent effectiveness, may be considered.

TABLE 7.4.6 A Monitoring of Propulsion Machinery – Electric (Refer also Chapter 7Sect

4/Table 7.4. 3)

Item			Alarm (1)	Display (3)	Remarks
Propulsion Generator	A1	Pressure, bearing, lube oil inlet – low	x	Pressure	Prime mover automatic shutdown
	A2	Voltage – off-limits	x	Voltage	To read all phases and at least one bus (2)
	A3	Frequency – off-limits	x	Frequency	
	A4	Current		Current	To read all phases (2)
	A5	Temperature, stationary windings – high	x	Temperature	To read all phases; for generators > 500 kW
	A6	Transfer of standby generator	x		
Propulsion A.C. Motor	B1	Pressure, bearing, lube oil inlet – low	x	Pressure	
	B2	Voltage, armature – off-limits	x	Voltage	To read all phases and at least one bus
	B3	Voltage, field		Voltage	
	B4	Frequency – off-limits	x	Frequency	
	B5	Current, armature		Current	To read all phases
	B6	Current field		Current	For synchronous motors
	B7	Ground lights or similar		Status	
	B8	Temperature, stationary windings – high	x	Temperature	To read all phases; for motors >500 kW
	B9	Motor running		Running	
	B10	Transfer of standby motor	x		
	B11	Motor cooling medium temperature – high	x	Temperature	If required
Propulsion D.C. Motor	C1	Pressure, bearing, lube oil inlet – low	x	Pressure	Automatic shutdown
	C2	Voltage armature	x	Voltage	
	C3	Voltage, field		Voltage	
	C4	Current, armature		Current	
	C5	Current, field		Current	
	C6	Ground lights or similar		Status	
	C7	Motor running		Running	
	C8	Failure of on-line motor	x		

	C9	Transfer of standby motor	x		
	C10	Motor cooling medium temperature – high	x	Temperature	If required
Propulsion Semi-conductor Rectifier (SCR)	D1	Voltage, SCR		Voltage	
	D2	Current, SCR		Current	
	D3	Overloading conditions, high current	x		Alarms before protective device is activated
	D4	Open/close position for assignment switches		Position	
	D5	SCR cooling medium temperature – high	x	Temperature	If required

Notes:

1 Required alarm is denoted by a (x).

2 For D.C. generators. Additionally, field voltmeters and ammeters shall be included.

3 Display of the analog or digital signal for the monitored parameter. The display of the signal is to provide indication of the monitored parameter in engineering units (such as degrees, PSI, RPM, etc.) or status indication. The engineering unit is to effectively display the relevant information concerning the monitored parameter. An alternative engineering unit which provides equivalent effectiveness, may be considered.

TABLE -7.4.6 B

Instrumentation and Safety System Functions in Centralized Control Station – Generator Prime Mover for Electric Propulsion

Systems	Monitored parameters		A	D	Auto start	Auto shut down	Notes [A = alarm. D = display. x = apply.]
Trunk Piston Type Diesel Engines							
Fuel Oil	E1	Fuel oil after filter (engine inlet), Pressure – low	x	x	x		
	E2	Fuel oil before injection pumps, temp. – high (or viscosity – low)	x				For heavy fuel oil burning engines only.
	E3	Fuel oil before injection pumps, temp. – low (or viscosity – high)	x				For heavy fuel oil burning engines only.
	E4	Leakage from high pressure pipes	x				
	E5	Fuel oil service tank, level – low	x				High level alarm is also required if without suitable overflow arrangements.
	E6	Common rail fuel oil pressure	x				

		– low					
Lubricating Oil	F1	Lub. oil to main bearing, pressure – low	x	x	x	x	
	F2	Lub. oil filter differential, pressure – high	x	x			
	F3	Lub. oil inlet, temp. – high	x	x			
	F4	Oil mist in crankcase, mist concentration – high; or Bearing temperature – high; or Alternative arrangements	x			x	For engines having power of 2250 kW (3000 hp) and above or having cylinder bore of more than 300 mm (11.8 in.). Single sensor having two independent outputs for initiating alarm and for shutdown will satisfy independence of alarm and shutdown. Refer Part 6- Chapter 8-Sect 4[4.1.1.10]of the INTLREG Rules for Building and Classing Steel Vessels.
	F5	Each cylinder lubricator, flow rate – low	x				If necessary for the safe operation of the engine.
	F6	(2010) Common rail servo oil pressure - low	x				
Sea Cooling Water	G1	Sea water cooling system pressure – low	x	x	x		
Cylinder Fresh Water Cooling	H1	Water inlet, pressure – low or flow – low	x	x	x		
	H2	Water outlet (general), temp. – high	x	x			
	H3	Cooling water expansion tank, level – low	x				
Compressed Air	J1	Starting air before shut-off valve, pressure – low	x	x			
	J2	Control air pressure – low	x	x			
Exhaust Gas	K1	Exhaust gas after each cylinder, temp. – high	x	x			For engine power > 500 kW/cylinder

TABLE 7.4.6 B (continued)

Instrumentation and Safety System Functions in Centralized Control Station – Generator Prime Mover for Electric Propulsion

Systems	Monitored parameters		A	D	Auto start	Auto shut down	Notes [A = alarm. D = display. x = apply.]
Turbocharger	L1	Turbocharger oil inlet pressure – low	x				Unless provided with a self-contained lubricating oil system integrated with the turbocharger
	L2	Turbocharger oil outlet temp., each bearing – high	x				Where outlet temperature from each bearing cannot be monitored due to the engine/ turbocharger design, alternative arrangements may be accepted. Continuous monitoring of inlet pressure and inlet temperature in combination with specific intervals for bearing inspection in accordance with the turbocharger manufacturer's instructions may be accepted as an alternative.
Engine	M1	Over speed	x			x	
Power Supply	N1	Main	x	x			
	N2	Emergency	x				
Gas Turbines							
Fuel Oil	O1	Pressure or flow – low	x	x			
	O2	Temperature – high and low (or viscosity – low and high)	x	x			For heavy fuel oil.
Lubricating Oil	P1	Inlet pressure – low	x	x	x	x	
	P2	Inlet temperature – high	x	x			
	P3	Bearing temp. or bearing oil outlet temp. – high	x	x			
	P4	Filter differential pressure – high	x				
	P5	Tank level – low	x	x			
Cooling Medium	Q1	Pressure or flow – low	x	x			
	Q2	Temperature – high	x				
Starting	R1	Stored starting energy level – low	x				

	R2	Ignition failure	x			x	
Combustion	S1	Combustion or flame failure	x			x	
Exhaust Gas	T1	Temperature – high	x	x		x	
Turbine	U1	Vibration level – high	x			x	
	U2	Rotor axial displacement – large	x			x	Auto shutdown may be omitted for rotors fitted with roller bearings
	U3	Over speed	x			x	
	U4	Vacuum at compressor inlet – high	x			x	
Power Supply	V1	Main	x	x			
	V2	Emergency	x				

Display = display of the analog or digital signal for the monitored parameter. The display of the signal is to
provide indication of the monitored parameter in engineering units (such as degrees, PSI, RPM, etc.)
or status indication. The engineering unit is to effectively display the relevant information concerning
the monitored parameter. An alternative engineering unit which provides equivalent effectiveness, may be considered.

Auto start = automatic starting of a standby pump, along with activation of suitable alarm.

Auto shutdown = automatic stopping of the diesel engines and gas turbine, along with activation of suitable alarm.

TABLE –7.4.7

Monitoring of Auxiliary Prime-movers and Electrical Generators (Refer also Chapter 7Sect 4/Table 7.4. 3)

Item				Alarm (1)	Display (4)	Remarks
Diesel Engine	Lube Oil	A1	Pressure, lube oil inlet – low	x	Pressure	Automatic engine shutdown
		A2	Temperature, inlet – high	x	Temperature	
		A3	(2010) Common rail servo oil pressure – low	x		
	Cooling Medium	B1	Pressure or flow – low	x	Pressure, or flow	
		B2	Temperature, outlet – high	x		
		B3	Level, expansion tank – low	x		If separate from main system
	Fuel Oil	C1	Fuel oil leakage from pressure pipe	x		
		C2	Level, in fuel oil daily service tank – low	x		Refer also Chapter 7 Sect 4[4.13]
		C3	Common rail fuel oil pressure – low	x		

	Crankcase	D1	Oil mist in crankcase, mist concentration – high; or Bearing temperature – high; or Alternative arrangements	x		Automatic engine shutdown (2)
	Starting Medium	E1	Pressure or level – low	x	Pressure, or level	
	Over speed	F1	Device activated	x		Automatic shutdown. Refer Part 6- Chapter 8-Sect 2[2.10.5] and [2.10.10] of the INTLREG Rules for Building and Classing Steel Vessels
Electrical Generator		G1	Pressure, bearing, lube oil inlet – low	x	Pressure	Prime mover automatic shutdown
		G2	Voltage – off-limits	x	Voltage	To read all phases and at least one bus (3)
		G3	Frequency – off-limits	x	Frequency	
		G4	Current – high	x	Current	To read all phases (3)
		G5	Transfer of standby generator	x		

Notes:

1 Required alarm is denoted by a (x).

2 For engines having a power of 2250 kW (3000 hp) and above or having a cylinder bore of more than 300 mm (11.8 in.). Single sensor having two independent outputs for initiating alarm and for initiating alarm and for shutdown will satisfy independence of alarm and shutdown. Refer Part 6 Chapter 8-Sect 2 [2.10]of the *INTLREG Rules for Building and Classing Steel Vessels.*

3 For D.C. generation. Additionally, field voltmeters and ammeters shall be included.

Display of the analog or digital signal for the monitored parameter. The display of the signal is to provide indication of the monitored parameter in engineering units (such as degrees, PSI, RPM, etc.) or status indication. The engineering unit is to effectively display the relevant information concerning the monitored parameter. An alternative engineering unit which provides equivalent effectiveness, may be considered.

SECTION 5 VESSELS CLASSED WITH UM NOTATION

Contents

5.1 General

The requirements in this subsection apply to vessels capable of operating as **UM** classed vessels but because of their compact propulsion-machinery space design are not fitted with the means to control the propulsion and its associated machinery from a centralized location within the propulsion-machinery space. Except as noted herein, the requirements in Sections Chapter 7 Sect 1 through Chapter 7 Sect 4, as applicable, shall be complied with.

5.2 Station in Navigation Bridge

Controls, alarms and displays as listed in Chapter 7 Sect 4[4.4] shall be provided on the station in the navigation bridge. Refer Chapter 7Sect 4/Table 7.4.2. For vessels having nonintegrated propulsion machinery, the means for starting, stopping and transferring vital auxiliary pumps .Refer Chapter 7 Sect 4[4.8] shall be fitted at the station in the navigation bridge and may also be fitted in the centralized station. Refer Chapter 7 Sect 1[1.3.21] for definition of integrated propulsion machinery.

5.3 Centralized Monitoring Station

The requirements in Chapter 7 Sect 4[4.5] are applicable, except that the centralized station need not be provided with propulsion controls, but is to include displays and alarms needed for the monitoring of the propulsion machinery and associated ship's service systems, electrical power generating machinery, and monitoring of propulsion-machinery space. The monitoring system is to provide the same degree of equivalency as if the propulsion-machinery space was manned. Refer Chapter 7Sect 4/Table 7.4.3 through Chapter 7 Sect 4/Table 7.4.7 for required alarms and displays to be fitted at this station.

5.4 Communications

Communications, as required in Chapter 7Sect 2/[2.7], are also to include the centralized monitoring station in the propulsion-machinery space.

5.5 Sea Trials

In addition to the trials per Chapter 7 Sect 4 [4.19], successful operation of the propulsion machinery shall be demonstrated with the propulsion-machinery space unattended for a period of at least 12 hours.

SECTION 6 VESSELS LESS THAN 500 GT HAVING A LENGTH EQUAL OR GREATER THAN 20 m (65 ft)

Contents

6.1 General

The requirements contained in this Section are intended for vessels less than 500 GT having a length equal to or greater than 20 m (65 ft). Vessels having a length less than 20 m (65 ft) will be specially considered.

Note: **UM** class notation may be granted to vessels of < 500 GT and a length of 20 m (65 ft) $\leq L \leq$46 m (150 ft), provided that the applicable requirements in Chapter 7 Sect 1 through Chapter 7 Sect 5 are met.

6.2 Definitions

Refer Chapter 7 Sect 1[1.3].

6.3 Plans to be Submitted

Plans and specifications shall be submitted in accordance with Chapter 1 Sect 1[1.4] for approval and are to include the following information.

i) Machinery arrangement plans showing location of control stations in relation to controlled units;

ii) Arrangements and details of control consoles, including front views, installation arrangements together with schematic diagrams for all power, control and monitoring systems, including their functions; and a list of alarms/displays, as required in Chapter 7 Sect 6[6.8.3]

iii) Type and size of all electrical cables and wiring associated with the control systems, including voltage rating, service voltage and currents together with overload and short-circuit protection;

iv) Description of all alarm and emergency tripping arrangements; functional sketches or description of all special valves, actuators, sensors and relays;

v) Schematic plans and supporting data of fire-protection and extinguishing systems, including fire-detection and alarm systems and bilge high water alarms.

vi) Schematic plans of hydraulic or pneumatic control systems.

6.4 Electrical Cables and Console Wiring

In general, cables shall be used external to the consoles and they shall be of the marine type in accordance with the applicable parts of Part 6, Chapter 6. Cables in accordance with other standards which are not less effective will be considered. Cables and console wiring for control and monitoring shall be of the flame- retarding type and shall be stranded, except that solid conductors may be used in low-energy circuit where they are properly supported and not subject to undue vibration or movements.

6.5 Alarms

The alarm system shall be able to indicate more than one fault at the same time and be so arranged that acceptance of one fault shall not to inhibit another alarm. Audible alarms shall be maintained until they are acknowledged, and visual indication is to remain until the fault is corrected.

6.6 Safety System

Safety systems shall be of the fail-safe type and are to respond automatically to fault conditions that may endanger the machinery or safety of the crew. This automatic action is to cause the machinery to take the least drastic action first, as appropriate, by reducing its normal operating output or switching to a stand-by machinery and last, by stopping it, i.e., disrupting source of fuel or power supply, etc. However, the propulsion machinery is to automatically shut down upon a loss of lubricating oil or an over speed condition, and such conditions shall be alarmed. Where arrangements for overriding the shutdown of the main propelling machinery are fitted, these shall be as to preclude inadvertent activation. Visual means shall be provided to show whether or not it has been activated.

6.7 Bridge Control of Propulsion Machinery

6.7.1 General

The requirements in Chapter 7 Sect 3[3.2] Chapter 7 Sect 3[3.4] and Chapter 7 Sect 3[3.9] are applicable.

6.7.2 Local Control

It shall be possible to control the propelling machinery locally in the case of failure in any part of the automatic or remote control systems.

6.7.3 Bridge Control Indicators

Indicators for the following items shall be fitted on the navigation bridge:

i) Propeller speed and direction where fixed pitch propellers are fitted;

ii) Propeller speed and pitch position where controllable pitch propellers are fitted;

iii) For air-started engines, an alarm shall be provided to indicate low starting air pressure and shall be set at a level which still permits main engine starting operation;

iv) An alarm shall be provided for low control fluid pressure for controllable pitch propellers.

6.8 Requirements for Periodically Unattended Propulsion Machinery Spaces

6.8.1 Fire Protection

6.8.1.1 Fire Prevention

6.8.1.1(a) Piping for high pressure fuel injection and return piping on main and auxiliary engines shall be effectively shielded and secured to prevent fuel or fuel mist from reaching a source of ignition on the engine or its surroundings. Leakages from such piping shall be collected in a suitable drain tank provided with high level alarm audible at the navigation bridge.

6.8.1.1(b) Drip trays for collecting fuel and lubricating oil shall be fitted below pumps, heaters, burners, tanks not forming part of the vessel's structure, etc., with connections to a suitable drain tank with high level alarm audible at the navigation bridge.

6.8.1.1(c) Where daily service fuel oil tanks are filled automatically or by remote control, means shall be provided to prevent overflow spillages. Similar consideration shall be given to other equipment which treat flammable liquids automatically (e.g., fuel oil purifiers), which whenever practicable shall be installed in special space reserved for purifiers and their heaters.

6.8.1.1(d) Where fuel oil daily service tanks or settling tanks are fitted with heating arrangements, a high temperature alarm, audible at the navigation bridge, shall be provided if the flashpoint of the fuel oil can be exceeded.

6.8.1.2 Fire Detection

A fire detection system shall be provided for the machinery spaces.

6.8.2 Protection against Flooding

Bilges in machinery spaces shall be provided with a high level alarm in such a way that the accumulation of liquids is detected at normal angles of trim and heel. The detection system is to initiate an audible and visual alarm on the navigation bridge.

6.8.3 Alarms and Displays

The following alarms and displays shall be provided at the navigation bridge.

	Items	Display	Alarm
1	L.O. Pressure to main engine and reduction gear	Pressure	Low
2	Engine coolant	Temperature	High
3	Starting air (if applicable) pressure		Low
4	Propeller Speed	RPM	
5	Propeller Direction	Ahead	
6	or	Astern	
7	Pitch	Pitch	
8	Steering gear motor		Stopped
9	Control power	Available	Failure
10	Generator voltage	Volt (1)	
11	Generator current	Amps (1)	
12	Fuel oil day tanks	Level (1)	Low
13	Fuel oil tanks heater temperature [Refer Chapter 7 Sect 6[6.8.1.1](d}		High
14	Oil collection tank [Refer Chapter 7 Sect 6[6.8.1.1](a} and Chapter 7 Sect 6[6.8.1.1](b}	Level (1)	High
15	Bilge level	Light (1)	High
16	Fire alarm	Light (1)	Fire

Note: As an alternative, these displays may be provided locally