INTLREG
INTERNATIONAL REGISTER OF SHIPPING

RULES AND REGULATIONS FOR CLASSIFICATION OF STEEL VESSELS 2021

Part 11
Small Crafts

www.intlreg.org

This page is intentionally left blank

CHANGES HISTORY

Refer Changes history in Part 1

CONTENTS

CHAPTER 1 CLASSIFICATIONS AND SURVEYS

CONTENTS

SECTION 1 GENERAL REGULATIONS

Contents

1.1. Application

1.1.1. Application of this rule shall be done for the Classification and Construction of Small Craft of International Register of Shipping.

1.1.2. Application of the Rules prescribed in this part shall be done to crafts from 2.5 m up to 45 m hull length determined as given in the subsequent section, as well as their components thereof, with passenger capacity not more than 12.

1.1.3. Application of the requirements of the present Part shall not be done to: boats those are designed for sports purposes and ships of war, boats intended for racing, including training boats; canoes, kayaks, gondolas, pedalos and other types of rowing boats; water skis, water sled, “banana” and similar types of towed craft; boards for surfing and wind surfing, including powered ones; inflatable and framed cloth boats; personal watercraft; ram-wing craft; submersibles; antique historical craft and replicas thereof; experimental craft, as well as small craft used as equipment of the ship (life and rescue boats, rafts) carried on board craft which are not pleasure craft.

1.1.4. The present Rules set forth the requirements upon compliance with which the craft may be assigned a class of the Register.

1.1.5. Requirements of the present Rules may be applied for classification of craft not specified in 1.1.2 and 1.1.4, on agreement with the Society.

1.1.6. Application of the requirements of the present Rules to small craft with passenger capacity more than 12 but less than 36 and/or with a hull length more than 2.5 m but less than 40 m may be considered, on agreement with the Society.

In this case: sea-going small craft from more than 24 m hull length and 36 passengers are subjected to special consideration by the Register with due regard for the requirements of the present Rules and applicable provisions of the Rules prescribed in Part 3.

1.1.7. Pleasure craft intended for operation on the European inland waterways and are specified in 1.1.2 and 1.1.4, shall also meet the applicable provisions of the UN ECE Resolution No.61 “Recommendations on Harmonized Europe-Wide Technical Requirements for Inland Navigation Vessels” of 16 March 2006.

1.1.8. The designs of the craft, which are submitted to the Society for review after the date when the present Rules come into force, the requirements of the present Rules will cover for them.

1.1.9. Some requirements of the present Rules apply to craft in service independently of or depending on the date of construction will be specified in the Rules.

1.1.10. As far as it is practicable and reasonable, crafts are subject to the requirements of these Rules, if necessary, if they are under construction at the time when the present Rules become effective, will depend on the Society's decision.

1.1.11. Unless otherwise specified in the Rules, craft which are converted or modernized after the present Rules have come into force are subject to the Rules requirements to the extent in so much as practicable and reasonable.

1.1.12. The requirements of the present Rules are applied in order to justify the decisions regarding assignment of the Classification Society, in case of reclassification of a craft in service which was classed in accordance with other Rules.

1.1.13. According to the procedure established by the Society, confirmation of compliance with the requirements of the Rules is the Society's prerogative and performance.

1.1.14. Any statements on compliance of the item of the Society's technical supervision with the requirements of the Rules, made or documented by an organization other than the Society, or not properly confirmed by the Society cannot be considered as a confirmation of such compliance.

1.1.15. As prescribed by the Rules and requirements of the Society, classification is dependent upon, and covers only, the standard of construction, materials and workmanship of the hull, machinery and their essential appliances. It is not concerned with any other fittings, appliances, details or general finish which is not required by the Rules of the Society but may be specially desired or specified by an Owner.

1.1.16. New Rule or alteration in any existing Rule materially affecting classification is to be applied compulsorily within 6 months of its adoption, nor after the approval of the original midship section or equivalent structural plans, except in the case of a special directive by the Committee. Written application is to be made to the Committee, where it is desired to use existing previously approved plans for a new contract.

1.1.17. The Rules are framed on the understanding that the craft will at all times:

- with particular reference to the placement on board of persons and equipment and the reduction of speed in heavy weather, only be used/operated under conditions for which it is designed, and be properly handled and/or loaded.
- The materials used in the construction of the hulls and machinery of craft designed for classification, or in the repair of craft already classed, are to comply with the requirements of Parts 2 and 3.
- Reporting of any damage, defect or breakdown which could invalidate the conditions for which a class has been assigned is to be done to the Society without delay.

1.1.18. The attention shall be drawn of the Owners and Builders to the fact that certain countries have statutory regulations regarding life-saving appliances and other items which are not covered by the Rules of the Society.

SECTION 2 CLASS NOTATIONS

Contents

2.1. Class characters

At the time of classing, this distinguishing mark will be assigned, in compliance with the Rules, and to the satisfaction of the Committee, to new yachts and small craft constructed under the Special Survey of the Society.

*

All yachts and small craft considered suitable for sea-going service will be assigned with this character figure.

A character letter will be assigned to all yachts and small craft, which have been built or accepted into class according to the Society's Rules and Regulations and which are maintained in good and efficient condition, with the exception of yachts designed and intended for racing under the Rules of the International Yacht Racing Union.

SECTION 3 SURVEYS – GENERAL

Contents

3.1. New construction surveys

3.1.1. As detailed in the Rules, constructional plans and all necessary particulars relevant to the hull, equipment and machinery, are to be submitted for the approval of the Committee before the commencement of the work, when it is intended to build a yacht or small craft for classification with the Society. Any subsequent modifications or additions to the scantlings, arrangements or equipment shown on the approved plans are also to be submitted for approval.

3.1.2. Special tests or examinations before and during service may be required, where the proposed construction of any part of the hull or machinery is of novel design, or involves the use of unusual material, or where experience, in the opinion of the Classification Society, has not sufficiently justified the principle or mode of application involved. Entrance of a suitable notation in such cases may be mentioned in the appropriate Register Book.

3.1.3. Satisfaction of the Surveyor is to be obtained, that the Builder's facilities, equipment, etc., are such that acceptable standards can be obtained both for the construction of the craft and the installation of any machinery and/or electrical equipment that are intended to be fitted.

3.1.4. Building of new yachts and small craft intended for classification are to be covered under the Special Survey of the Society from the time the work has been commenced until the completion of the craft the Surveyors are to be satisfied that the materials, workmanship and arrangements are satisfactory and are according to the Rules. Rectification of any items found that are not according to the Rules or the approved plans, or any material, workmanship or arrangements found to be unsatisfactory, are to be replaced/ rectified/ repaired.

3.1.5. The yacht or small craft is to be examined afloat after completion, and conduction of the trials of the machinery are to be achieved as specified in these Rules. Sails are to be hoisted and checked.

3.1.6. From the commencement of the work, the survey is to relate to the period until the final test under working conditions, when the machinery is constructed under the Special Survey of the Society. Rectification of any items found not to be according to the Rules or the approved plans, or any material, workmanship or arrangements found to be unsatisfactory, are to be replaced/ rectified/ repaired.

3.1.7. During construction of yachts and small craft built under the inspection of the Society, the date of completion of the Special Survey will normally be taken as the date of build to be entered in the appropriate Register Book. Indication of the dates of launching and completion or commissioning may be separately given in the appropriate Register Book, if the period between launching and completion or commissioning is, for any reason, unduly prolonged.

3.2. Existing yachts and small craft

3.2.1. Classification of yachts and small craft not built under survey

In Sec 4.11 and Sec 5.11, indications of the requirements of the Committee for the classification of yachts and small craft which have not been built under the Society's Survey are given, respectively. Special consideration from another recognized Classification Society will be given to craft transferring class to the Society.

3.2.2. Reclassification

The Committee will direct a Special Survey for reclassification, when reclassification is desired for a yacht or small craft for which the class previously assigned by the Society has been withdrawn, appropriate to the age of the craft and the circumstances of the case, be carried out by the Surveyors of the Society. The Committee will be prepared to reinstate her original class, if, at such survey, the craft be found or placed in a good and efficient condition according to the requirements of the Rules and Regulations. The date of reclassification for small craft will be registered in the Supplement to the Register of Ships and for yachts will be recorded in the Register of Yacht.

3.3. Repairs and alterations

3.3.1. Under the inspection of, and to the satisfaction of, the Society's Surveyors, all repairs to hull, equipment and machinery which may be required in order that a yacht or small craft may retain her class are required to be carried out. The repairs are to be surveyed by one of the Society's Surveyors at the earliest opportunity thereafter, when repairs are effected at a port, terminal or location where the services of a Surveyor to the Society are not available.

3.3.2. The Surveyors are to communicate their recommendations at once to the Owner, or his representative, when at any survey the Surveyors consider repairs to be necessary, as a result of either damage or wear and tear. Immediate notification is to be given to the Committee by the Surveyors, when such recommendations are not complied with.

3.3.3. It shall be the Owner's responsibility to notify the Society at the first practicable opportunity, if a yacht or small craft which is classed with the Society is damaged to such an extent as to necessitate towage outside port limits.

3.3.4. The plans and particulars of any proposed alterations to the approved scantlings and arrangements of hull, equipment, or machinery are to be submitted for approval, and such alterations are required to be carried out under the inspection of, and to the satisfaction of, the Surveyors of the Society.

3.4. Existing yachts and small craft—Periodical Surveys

3.4.1. According to the requirements given in Section 4 and 5, respectively, survey of all yachts and small craft of length less than 24 m are to be carried out at intervals of approximately 2 years and one year respectively.

3.4.2. Periodic survey of seagoing crafts having length more than 24 m or 36 passenger shall meet requirements indicated in Part 1

3.4.3. Whenever a yacht or small craft can be examined in dry-dock or on a slipway, the Owner shall notify the Society. Yachts and small craft are to be examined at intervals generally not exceeding 2 years, in dry-dock or on a slipway. Justifying an extension of these intervals, consideration may be given at the discretion of the Committee to any special circumstances.

3.4.4. The interval between dry dockings for small craft operating in fresh water may be greater than that given in 3.4.2 but will be considered in relation to the hull construction material.

3.4.5. Any relevant statutory requirements of the National Authority of the country are to be attended carefully in which the yacht or small craft is registered.

3.4.6. Recording of the date of the last examination in dry-dock or on a slipway for small craft in the Supplement to the Register of Ships and for yachts will be done in the Register of Yachts.

3.4.7. According to the requirements given in Section 4 and 5, respectively, all yachts and small craft classed with the Society are also to be subjected to Special Surveys. These surveys become due at 4-yearly intervals, the first one 4 years from the date of construction or date of Special Survey for classification, and thereafter 4 years from the date of the previous Special Survey.

3.4.8. The Committee may consider its postponement, either wholly or in part, provided that the Society's Surveyors are present on next opportunity, about the due date, of assessing the general condition of the hull and machinery, when it is inconvenient for an Owner to fulfill all the requirements of a Special Survey at its due date. The Committee will normally call for a General Examination of the yacht or small craft, for this purpose, including dry-docking, of adequate extent to be assured that its condition is satisfactory for the period of grace desired, which is not to exceed 12 months from the due date.

3.4.9. In the case of small craft engaged on a regular schedule, commencement of Special Surveys which are conducted prior to their due date are not to extend over a period greater than12 months, except with the prior approval of the Committee, who will be prepared to consider suitable arrangements for carrying out Special Surveys over an extended period.

3.4.10. Yachts will have a record entered in the *Register of Yachts* indicating the type of survey and date, which have satisfactorily passed a Periodical Survey. Records of Special Survey will not be assigned until the requirements of the Society for machinery surveys are satisfactorily complied with.

3.4.11. Small craft will have a record entered in the *Supplement to the Register of Ships* indicating the date, which have satisfactorily passed a Special Survey. The date recorded in the *Supplement* will be the date at which the principal part of the requirements is complied with, Where a Special Survey is not completely carried out at one time. Until the requirements of the Society for machinery surveys are satisfactorily complied with, records of Special Survey will not be assigned.

3.4.12. All compartments of the hull are to be opened for survey and testing in rotation with an interval of 5 years between consecutive examinations of each part, at the request of an Owner, an agreement has to be arrived by the Committee that the complete survey of the hull may be carried out on the Continuous Survey basis. Further parts are to be opened up and examined as considered necessary by the Surveyor, if the examination during Continuous Survey reveals any defects. A record depicting the date of satisfactory completion of the Continuous Survey cycle will be made for small craft in the *Supplement to the Register of Ships* and for yachts in the *Register of Yachts.*

3.4.13. For yachts and small craft, submission of the machinery is to be done to the surveys described in Chapters 3 and 4, respectively.

3.4.14. Complete Surveys of machinery become due at 4-yearly intervals, the first one 4 years from the date of build or date of first classification as recorded in the appropriate *Register Book,* and thereafter 4 years from the date of the previous Complete Survey. Whether or not Complete Surveys are commenced prior to their due date, they are not to extend over a period greater than 12 months without the prior approval of the Committee. Preparation of an appropriate record shall be done for small craft in the *Supplement to the Register of Ships* and for yachts in the *Register of Yachts,* on satisfactory completion of a survey. The date recorded shall be that by which the major portion of the survey has been held, where a Complete Survey is not carried out at one time.

3.4.15. Granting of a certificate for a limited period shall be accorded to the nature of the case, if it is found desirable that examination of any part of the machinery shall be conducted again before the due date of the next survey.

3.4.16. The Committee may consider its postponement, when it is inconvenient for an Owner to fulfill all the requirements of a Complete Survey at its due date, either wholly or in part, provided that the Surveyors of the Society are given an opportunity, about the due date, of assessing the general condition of the machinery. The Committee will normally require a General

Examination to be made of adequate extent to assure them that the condition of the machinery is satisfactory for the period of grace desired, which is not to exceed 12 months from the due date, for this purpose. This General Examination will usually include any item which has not been surveyed for 5 years, together with any item in respect of which the 5-year interval would otherwise be exceeded during the period of postponement.

3.4.17. When, it has been agreed by the Committee that the Complete Survey of the machinery may be carried out on the Continuous Survey basis, at the request of an Owner, the opening of various items of machinery are to be carried out for survey in rotation, to ensure that the interval between consecutive examinations of each item will not exceed 5 years, as far as practicable. In general, approximately examination of one-fifth of the machinery is to be conducted each year. Preparation of a record indicating the date of satisfactory completion of the Continuous Survey cycle will be available for small craft in the *Supplement to the Register of Ships* and for yachts in the *Register of Yachts.*

3.4.18. Opening of further parts are to be done up and examined as considered necessary by the Surveyor, if any examination during Continuous Survey reveals defects, and the defects are to be made good to his satisfaction.

3.4.19. Where the fitting of condition monitoring equipment is used, upon application by the Owner, the Committee, will be prepared for the amendment of applicable periodical survey requirements where submission of details of the equipment are provided and found satisfactory. It shall be a requirement that an Annual Survey be held, where acceptance of machinery installations are conducted for this method of survey, at which time monitored records will be analyzed and the machinery examined under working conditions.

3.4.20. As stated in Ch 3, 10 for yachts and Ch 4, 10 for small craft respectively, Surveys for screw shaft and tube shaft are to be carried out in accordance with that. Preparation of appropriate records will be done for small craft in the *Supplement to the Register of Ships* and for yachts in the *Register of Yachts,* on satisfactory completion.

3.5. Certificates

3.5.1. On completion of the Special Survey of new or existing yachts or small craft which have been submitted for classification, when the required reports, have been received from the Surveyors and approved by the Committee, certificates of first entry of classification, signed will be issued to Builders or Owners.

3.5.2. In respect of completed Periodical Surveys of hull and machinery, certificates of class maintenance will also be issued to Owners on application.

3.5.3. To proceed on her voyage, the Surveyors of the Society holds the power to issue provisional (interim) certificates to enable a yacht or small craft classed with the Society, provided that

in their opinion it is in a fit and efficient condition. For continuance of class, such certificates will embody the Surveyor's recommendations but in all cases are subject to confirmation by the Committee.

3.6. Notice of surveys

3.6.1. The Owner is responsible to ensure that all surveys that are compulsory for the maintenance of class are carried out at the proper time and according to the instructions of the Committee.

3.6.2. By means of a letter or a quarterly computer print-out or electronically, the Society will give timely notice to an Owner about forthcoming surveys. If accidentally the Society misses out to deliver such notices, it does not absolve the Owner from his responsibility to comply with the survey requirements of the Society for maintenance of class.

3.7. Withdrawal of class

3.7.1. The notation 'IR class withdrawn—Owner's request' (with date) will be made in the *Register of Yachts,* when the class of a yacht, for which the Regulations as regards surveys on hull, equipment and machinery have been complied with, is withdrawn by the Committee in consequence of a request from the Owner. The notation will be altered to 'Classed IR until* (with date) after one year.

3.7.2. The notation 'Class withdrawn at Owner's request' (with date) will be made in the *Supplement to the Register of Ships,* when the class of a small craft, for which the Regulations as regards surveys on hull, equipment and machinery have been complied with, is withdrawn by the Committee in consequence of a request from the Owner. The notation 'IR class withdrawn—Owner's request' (with date) will be made in the next reprint of the *Register Book* and after one year the notation will be altered to 'Classed IR until' (with date), for small craft of 100 tons gross and upwards. The entry will be deleted in the next reprint of the *Register Book,* for small craft less than 100 tons gross.

3.7.3. The class will be withdrawn and preparation of the notation 'IR class withdrawn' (with date) will be done in the *Register of Yachts,* when the Regulations as regards surveys on the hull or equipment or machinery have not been complied with and the yacht is thereby not entitled to retain class. Alteration of the notation will be done to 'Classed IR until' (with date) after one year.

3.7.4. The class will be withdrawn and the notation 'Class withdrawn* (with date) will be made in the *Supplement to the Register of Ships,* when the Regulations as regards surveys on the hull or equipment or machinery have not been complied with and the small craft is thereby not entitled to retain class. The notation 'IR class withdrawn' (with date) will be made in the next reprint of the *Register Book* and after one year the notation will be altered to 'Classed

IR until* (with date), for small craft of 100 tons gross and upwards. The entry will be deleted in the next reprint of the *Register Book,* for small craft less than 100 tons gross.

3.7.5. Yachts

From reported defects in the hull or equipment or machinery, when it is found, that a yacht is not entitled to retain class in the *Register of Yachts,* and the Owner fails to repair such defects according to the requirements of the Society, the class will be withdrawn and preparation of the notation 'IR class withdrawn—Reported defects' (with date) will be done in the *Register of Yachts.* The notation will be altered to 'Classed IR until' (with date) after one year.

3.7.6. Small craft

From reported defects in the hull or equipment or machinery, when it is found, that a small craft is not entitled to retain class in the *Register of Ships,* and the Owner fails to repair such defects according to the requirements of the Society, the class will be withdrawn and preparation of the notation 'Class withdrawn—Reported defects' (with date) will be done in the *Supplement to the Register of Ships.* The notation 'IR class withdrawn—Reported defects* (with date) will be made in the next reprint of the *Register Book* and after one year the notation will be altered to 'Classed IR until* (with date), for small craft of 100 tons gross and upwards. The entry will be deleted in the next reprint of the *Register Book* for small craft less than 100 tons gross.

3.7.7. The class will be liable to be withdrawn, when any small craft proceeds to sea with less freeboard than that approved by the Committee, or when the freeboard marks are placed higher on the sides of the small craft than the position assigned or approved by the Committee, or, in cases of small craft where freeboards are not assigned, the draught is greater than that approved by the Committee.

SECTION 4 PERIODICAL SURVEYS – YACHTS

Contents

4.1. Frequency of surveys

4.1.1. Application of the requirements of this Chapter shall be done to the periodical surveys set out in Sec 3, 3.4. The periods between such surveys are as follows, except as amended at the discretion of the Committee:

- Special Surveys at 4-yearly intervals with intermediate Biennial Surveys, consult Sec 2, 3.4.1 and 3.4.6.

  For alternative arrangements, see also Sec 2, 3.4.7 and 3.4.8.

- Complete Surveys of machinery at 4-yearly intervals; consult Sec 2, 3.4.13 and 3.4.15.

4.1.2. All compartments of the hull and all items of machinery are to be opened for survey in rotation to ensure that the interval between consecutive examinations of each part will not exceed 5 years, consult Sec 2, 3.4.11 and 3.4.16, when it has been agreed that the complete survey of the hull and machinery may be carried out on the Continuous Survey basis.

Point 4.9 shall be consulted for the frequency of surveys of screw shafts and tube shafts.

4.1.3. Upon application by the Owner, the Committee shall be prepared to give consideration to the circumstances of any special case.

4.2. Surveys for damage or alterations

4.2.1. Any exposed parts of the structure normally difficult of access are to be specially examined, at any time when a yacht is undergoing alterations or damage repairs, e.g. if any part of the main or auxiliary machinery, insulation or fittings, is removed for any reason, the structure in way is to be carefully examined by the Surveyor, or, where applicable, the cement in the bottom or covering/sheathing on decks is removed the structure in way is to be examined before the cement or covering/sheathing is relaid.

4.3. Annual Survey – Hull requirements

4.3.1. For the examination of the outside of the hull, rudder and underwater fittings, positioning of the yacht is to be done on blocks of satisfactory height in a drydock or on a slipway, and proper staging erected as may be necessary.

4.3.2. In order to satisfy himself as to its general condition, the Surveyor is to examine the yacht externally and internally.

4.3.3. All openings are needed to be attended to the sea from scuppers or discharges, together with valves and fastenings.

4.3.4. The Surveyor is also to satisfy himself as to the efficient condition of the following:—

- Superstructures, coach roofs, hatches, companionways, ventilator and air pipe coamings, skylights, flush deck scuttles and other openings, together with all closing appliances which protect openings in the weather decks.
- All openings in the yacht sides, with their securing appliances, also freeing port shutters in bulwarks.
- Fire protection, detection and extinction.

4.3.5. Examination is to be carried out by the Surveyor for steering arrangements. In order to determine that the gear is in good and workable condition, the various parts of the auxiliary/emergency steering gear are to be assembled and examined.

4.3.6. Attention is to be paid to all parts of rod and chain gears, where rod and chain steering gear is fitted. Examination of the AH pins are to be conducted and cleaning and examination of the chain in the vicinity of the blocks is to be done for wearing and tearing. Renewal of any length of chain is to be done which is so worn that its mean diameter at its most worn part is reduced by 11 per cent or more from its nominal diameter. All replacements of chain are to be subjected to the proof tests required for short link cables indicated in Part 2, at a recognized proving Establishment, and the certificates are to be produced. Recommendation of an additional breaking test shall be applied to these chains.

4.3.7. It is recommended that testing of the repaired chains is to be carried out by the repairers and a certificate to that effect is to be produced.

4.3.8. As far as accessible, examination of the windlass, anchors, chain cables and mooring equipment are to be conducted.

4.3.9. Examination of any anchor warps is to be done.

4.3.10. In sailing and auxiliary yachts the mast, spars and standing and running rigging are to be examined, in place, from the deck to ascertain that their condition remains satisfactory. Examination of the sails, are to be done, as far as available.

4.4. Special Survey of yachts under 5 years old—Hull requirements

4.4.1. Preparation

4.4.1.1. For the examination of the outside of the hull, rudder and underwater fittings, the yacht is to be placed on blocks of sufficient height in a dry dock or on a slipway, and proper staging erected as may be necessary. If considered necessary by the Surveyor, lifting of the rudder is to be done for examination of pintles.

4.4.1.2. As may be required by the Surveyor to satisfy himself as to the condition of all parts of the structure, the interior of the yacht is to be opened out by the removal of lining,

ceiling/cabin sole, portable tanks and ballast, etc. Clearing and cleaning of integral tanks, machinery spaces and other spaces are to be carried out for examination.

4.4.1.3. An adequate amount of close ceiling/cabin sole is to be lifted to permit examination of the structure below, in yachts having a single bottom.

4.4.1.4. Removal of a sufficient amount of ceiling/cabin sole is to be done from the bilges and inner bottom to permit examination of the structure below in yachts having a double bottom.

4.4.1.5. Cleaning of the chain locker is to be done internally. For inspection purpose, the chain cables are to be ranged. The anchors are to be cleaned and placed in an accessible position for inspection.

4.4.1.6. As may be required by the Surveyor for its proper examination, cleaning of the outside surface of the hull is to be done.

4.4.1.7. Removal of the portions in wood yachts, where the planking is sheathed with metal, shall be carried out as the Surveyor may direct. Examination of the sheathing is to be conducted to ensure it is adhering satisfactorily and that there is no possibility of water seepage occurring along plank edges, if sheathed with reinforced plastics or similar material.

4.4.2. Examination and testing

4.4.2.1. The requirements of a Biennial Survey are to be complied with.

4.4.2.2. Clearing and cleaning of all items and spaces required are to be done for examination by 3.1 are to be examined.

4.4.2.3. In way of all openings, attention is to be given to the hull.

4.4.2.4. In steel yachts the Surveyor may require to gauge, by drilling or other approved means, the thickness of the material in any portion of the structure where signs of wastage are evident or wastage is normally found. Construction of any parts of the structure is to be made good by materials of the approved scantlings and quality which are found defective or materially reduced in scantlings. Structure in way of discontinuities is to be attended carefully. Re-coating of the surfaces are to be done as necessary.

4.4.2.5. In the wood yachts, testing of the caulking of the outside and deck planking is to be examined and re-caulked as necessary.

4.4.2.6. Testing of all fastenings, including those through the ballast keel is to be conducted to ascertain their soundness and drawn for examination at the discretion of the Surveyor.

4.4.2.7. Testing of all integral tanks is to be carried by a head sufficient to give the maximum pressure that can be experienced in service. The Surveyor is to see that striking plates or other additional reinforcement is fitted under sounding pipes, when examining the tanks internally.

4.4.2.8. All decks, casings and superstructures are to be checked. The corners of openings and other discontinuities in way of decks and top sides are required to be checked carefully.

4.4.2.9. The wood decks or sheathing is to be examined and the caulking is to be tested and re-caulked as necessary. The wood is to be renewed if decay or rot is found or if it is excessively worn. The condition of the structure under wood decks, and fabric deck coverings are required to be examined timely. Sections are to be removed as necessary to ascertain the condition of the deck under, if it is found that such coverings are damaged or are not adhering closely to the deck.

4.4.2.10. The windlass, anchors and mooring equipment are to be examined and any length of chain cable is to be renewed if found to be reduced in mean diameter at its most worn part by 11 per cent or more from its nominal diameter. The anchor warps are to be examined specially. The chain locker and cable securing arrangements are to be checked, and as necessary, any lining on the side of the yacht is to be removed, for the Surveyor to satisfy himself as to the general condition of the structure.

4.4.2.11. In sailing and auxiliary yachts, the masts, spars and standing and running rigging are to be examined. Masts are to be unshipped for survey, where possible, failing which the mast wedges are to be removed, the mast examined aloft and special care taken to ascertain that the masts are sound. As considered necessary by the Surveyor, the whole of the standing rigging, including rigging screws, bolts, pins and fittings, is to be dismantled. For proper examination of the sail, the sails are to be laid out.

4.4.2.12. The hand bilge pumps, suctions, sluice valves, water-tight/weathertight doors, side scuttles and deadlights, overboard scuppers and discharge pipes and air and sounding pipes are to be examined, and either found or placed in good and efficient condition.

4.4.2.13. The structure and fittings are to be suitably re-coated as necessary, on satisfactory completion of the survey.

4.4.2.14. Consultation of 4.7 to 4.9 can be done, for surveys of machinery, electrical equipment, screw shafts and tube shafts.

4.5. Special Survey of yachts between 5 and 10 years old—Hull requirements

4.5.1. Preparation

The requirements of 4.4.1 are to be complied with.

4.5.2. Examination and testing

The requirements of 4.4.2 are to be complied with.

4.6. Special Survey of yachts over 10 year's old - Hull requirements

4.6.1. Preparation

4.6.1.1. The requirements of 4.5.1 are to be complied with. The rudder is to be unshipped for examination. As may be required by the Surveyor, fastenings are to be drawn for examination, on all yachts fitted with a ballast keel.

4.6.1.2. If sheathing of a wood yacht is done with metal, such sheathing as will at least permit an examination of the wood keel, garboards, plank ends, stem and sternpost is to be removed as requested by the Surveyor.

4.6.1.3. In wood yachts, as may be required by the Surveyor, fastenings are to be drawn for examination.

4.6.2. Examination and testing

4.6.2.1. The requirements of 4.4.2 are to be complied with. Clearing and cleaning of all items and spaces is required to be done for examination by 4.6.1 is to be conducted. The rudder stock and structure in way of the trunk is to be checked as well.

4.6.2.2. The shell plating in way of the waterline and any exposed deck plating are to be gauged, by drilling or other approved means, for steel yachts of 15 and not more than 20 years old, in addition to the gauging required by 4.4.2.4 to ascertain local wastage, to determine the amount of any general diminution in thickness. The gauging is to be done in at least four places on each side of the yacht.

4.7. Machinery Surveys—General requirements

4.7.1. Biennial Surveys

The propeller, stern bush and sea connection fastenings and the gratings at the sea inlets are to be examined, at each Biennial Survey, when the yacht is in dry-dock or on a slipway. The clearance in the stern bush or the efficiency of the oil gland is to be ascertained.

4.7.2. Complete Surveys

4.7.2.1. The requirements of 4.7.1 are to be complied with.

4.7.2.2. The sea connections are to be opened out and examined.

4.7.2.3. Opening of the main engines are to be carried out and the cylinders, liners, cylinder covers, valves and valve gear, scavenging arrangements and blowers, pistons, connecting rods and crankshafts are to be scrutinized, and checking of the crank-shaft alignment is to be conducted and found satisfactory.

4.7.2.4. The following essential components are to be examined :—

- Main gearing.
- Intermediate and thrust shafting
- Auxiliary engines, auxiliary air compressors, all pumps, heaters, coolers and filters used for essential service.
- Air receivers. Bilge, ballast, oil fuel, lubricating oil and cooling water systems. The holding down bolts and chocks of main and auxiliary machinery. Steering, machinery. Windlass. Electrical equipment, according to 4.8.
- Fuel tanks not forming part of the structure of the craft.

4.7.2.5. Remote and/or automatic controls are to be tested to demonstrate that they are in good working order, where they are fitted for essential machinery.

4.7.2.6. The initial starting arrangements are to be examined and tested.

4.7.2.7. The main and essential auxiliary machinery is to be checked under full working conditions for a period of sufficient duration to indicate that it is in satisfactory running order, on completion of the survey. This examination is to include maneuvering of main engines from ahead to astern running, and test of any bridge or wheelhouse controls. Tests of the steering gear are also to be carried out.

4.7.2.8. According to the relevant requirements of the Periodical Survey Regulations given in Part 1, Chapter 3, of the *Rules and Regulations for the Classification of Ships,* the Steam engines, boilers and steam pipes are to be checked.

4.8. Surveys - Electrical equipment

4.8.1. Complete Surveys

4.8.1.1. As far as practicable, the electrical equipment and cables are to be checked.

4.8.1.2. Measurement of the insulation resistance of all circuits and apparatus is to be carried out and is to be not less than 100,000 ohms. For this purpose, the circuits and apparatus may be tested separately. A low voltage instrument is to be used, when the voltage of the installation is 32 volts or less.

4.8.1.3. Examination of the protective device is to be done to verify that respective circuits are provided with suitable protection.

4.8.1.4. The installation is to be tried under working conditions.

4.9. Screw shafts and tube shafts

4.9.1. Frequency of surveys

4.9.1.1. At intervals of 4 years, surveys of shafts fitted with continuous liners or approved oil glands, or made of approved corrosion resisting materials, are to be examined.

4.9.1.2. At intervals of 2 years, surveys of all other shafts not covered by 4.9.1.1 are to be conducted.

4.9.1.3. Survey of controllable pitch propellers are to be carried out at the same time as the screw shafts. For checking purpose, the working parts and control gear is to be opened.

4.10. Surveys of unclassed machinery in existing classed yachts

4.10.1. General

4.10.1.1. The requirements of this survey are considered necessary in order to establish, so far as practicable, that the unclassed machinery installation does not constitute a hazard to the classed hull.

4.10.1.2. At any time when unclassed machinery in an existing classed yacht is undergoing alteration and/or replacement, the requirements for a Complete Survey given in 4.10.3 are to be complied with.

4.10.2. Biennial Surveys

At each Biennial Survey of the hull, the machinery is to be examined as required by 4.7.1.

4.10.3. Complete Surveys

At each Special Survey of the hull the requirements of 4.10.2 and the following are to be complied with:—

- The bilge pumping system is to be checked and tested under working conditions.
- Preparation of a general examination is to be conducted on the fuel tanks and fuel system with their valves, pipes and fittings, and of the engine exhaust system, piping and fittings.
- Preparation of a general examination of the electrical equipment is to be conducted and, if considered necessary, according to 4.8.1.2, a test of the insulation resistance is to be carried out.
- The starting arrangements are to be checked.
- Examination of the screw shafts and tube shafts are to be done *in situ* and, they are to be withdrawn for further examination, if considered necessary.

- According to 4.7.2.7, the main and essential auxiliary machinery is to be checked under full working conditions.

4.11. Classification of yachts not built under survey

4.11.1. General

4.11.1.1. Application shall be made to the Committee in writing, when classification is desired for a yacht not built under the supervision of the Surveyors of the Society.

4.11.1.2. When classed, periodical surveys of such yachts are subsequently to be held as in the case of yachts built under survey.

4.11.2. Hull and equipment

4.11.2.1. The plans showing the main scantlings and arrangements of the actual yacht together with any proposed alterations are to be submitted for approval. These shall comprise plans of the midship section, longitudinal section and decks, and such other plans as may be requested. Facilities are to be given for the Surveyor of the Society to obtain the necessary information from the yacht, when plans cannot be obtained or prepared by the Owner.

4.11.2.2. Supply of the particulars of the process of manufacture and the material of construction are to be tested.

4.11.2.3. In all cases the full requirements of 4.3, 4.4 and 4.5 are to be complied with. In addition, steel yachts over 20 years old are to comply with the requirements of 4.6.

4.11.2.4. The Surveyor is to satisfy himself regarding the workmanship and verify the approved scantlings and arrangements, during the survey. As necessary, parts of the structure will be required to be gauged for this purpose, and in order to ascertain the amount of any deterioration. The full particulars of the anchors, chain cables and equipment are to be submitted. Fire protection, detection and extinction are to be according to these Rules. Special consideration will be provided to yachts of recent construction.

4.11.2.5. The Committee may consider granting an interim record for a limited period, when the full survey requirements indicated in 4.11.2.3 and 4.11.2.4 cannot be completed at one time. Details of the completion of the survey should be submitted for consideration, for the conditions regarding the completion of the survey will depend on the merits of each particular case.

4.11.3. Machinery

4.11.3.1. To facilitate the survey, together with details of the machinery and the materials, the following plans and particulars are to be submitted. Plans of piping are to be diagrammatic.

Name of manufacturer of engine and gearbox that includes the manufacturer's type designation of engine and gearbox, together with the continuous shaft power of the engine at the crankshaft coupling with the revolutions per minute of crankshaft and propeller.

Arrangements and details of straight shafting and stern-tube including the method of attachment of the sterntube to the hull and any brackets or supports.

Arrangement of exhaust system indicating materials method of cooling, and if water spray injected, the method of draining.

Arrangement of bilge pumps and bilge piping; where the yacht has a Rule length of 12 m or less and has no subdivision, only particulars of the bilge pumps and diameters of suction pipes need be submitted.

Starting air system and air receivers.

Arrangement of the oil fuel system.

Separate oil fuel tanks over 230 litres.

Electrical wiring system.

4.11.3.2. Unless the machinery is of a novel or special character affecting classification, additional plans to those detailed in 4.11.3.1 are not required to be submitted.

4.11.3.3. The machinery is to be checked as required at Complete Surveys, and found or placed according to the arrangements and details shown on the plans that have been approved.

4.11.3.4. As required by 4.9, the screwshaft(s) is to be checked.

4.11.3.5. As required at Complete Surveys, checking of the electrical equipment is to be examined.

4.11.3.6. The whole of the machinery, including essential controls, is to be tried under working conditions to the satisfaction of the Surveyor.

4.11.3.7. Special consideration will be given to the scope of the survey, where classification is desired for a yacht which is classed by another recognized Society.

SECTION 5 PERIODICAL SURVEYS – SMALL CRAFT

Contents

5.1. General

5.1.1. Frequency of surveys

5.1.1.1. The requirements of this Chapter are applicable to the periodical surveys set out in Sec 3, [3.4]. The periods between such surveys, except as amended at the discretion of the Committee, are as follows:—

- Annual Surveys, as required by Sec 3, [3.4.1.]
- Docking Surveys at intervals not exceeding 2 years see Sec 3, [3.4.2.]
- Special Surveys at 4-yearly intervals see Sec 2, [3.4.6.] For alternative arrangements, see also Sec 2, [3.4.7.] and [3.4.8.]
- Complete Surveys of machinery at 4-yearly intervals; see Sec 3, [3.4.13], [3.4.15.]

5.1.1.2. All compartments of the hull and all items of machinery are to be opened for survey in rotation to guarantee that the interval between consecutive examinations of each part will not exceed 5 years, when it has been agreed that the complete survey of the hull and machinery may be carried out on the Continuous Survey basis. Sec 3, [3.4.11] and [3.4.16.] can be consulted.

5.1.1.3. Consultation of 5.10 can be done for the frequency of surveys of screwshafts and tube shafts.

5.1.1.4. Upon application by the Owner, the Committee will give due consideration to the circumstances of any special case.

5.1.2. Surveys for damage or alterations

5.1.2.1. Any exposed parts of the structure normally difficult of access are to be specially examined, at any time when a small craft is undergoing alterations or damage repairs, e.g. any part of the main or auxiliary machinery, insulation or fittings, has been removed for any reason, the structure in way is to be examined carefully by the Surveyor, or, where applicable, the cement in the bottom or covering/ sheathing on decks is removed the structure in way is to be examined before the cement or covering/sheathing is relaid.

5.2. Annual and Docking Surveys—Hull requirements

5.2.1. General

5.2.2.1. Wherever practicable and applicable, annual Surveys are to be held concurrently with statutory Annual or other Load Line Surveys.

5.2.2.2. In order to satisfy the general condition, the small craft is to be examined by the Surveyor at Annual and Docking Surveys, so far as is necessary and practicable.

5.2.2.3. The anchors and cables are to be checked by the Surveyor, when chain cables are ranged.

5.2.2. Annual Surveys

5.2.2.1. The Surveyor is to satisfy himself, in addition to the requirements of 5.2.1.2 as to the efficient condition of the following:—

- Hatchways on exposed weather decks, ventilator and air pipe coamings, exposed casings, skylights, flush deck scuttles, deckhouses and companionways, super-structures, side scuttles, deadlights and other openings, together with all closing appliances.
- Scuppers and discharges, valves on discharge lines (so far as practicable) and their control, guard rails, bulwarks and freeing ports.
- Bilge level detection and alarm systems on small craft assigned a *UMS* notation.

5.2.2.2. The steering arrangements are to be checked by the Surveyor. In order to ascertain that the gear is in good and workable condition, assembling and checking of the various parts of the auxiliary steering gear are to be examined.

5.2.2.3. Attention is to be paid to all parts of rod and chain gears, where fitting of rod and chain steering gear has been provided. All pins are to be checked and cleaning and checking of the chain in the vicinity of the blocks is to be done for wear and tear. Renewal is to be effected for any length of chain so worn that its mean diameter at its most worn part is reduced by 11 per cent or more from its nominal diameter. At a recognised Proving Establishment, all replacements of chains are to be subjected, to the proof tests required for short link cables indicated in Part 2, and the certificates are to be produced. Recommendation of an additional breaking test shall be applied to these chains.

5.2.2.4. It is recommended that that the repaired chains shall be tested by the repairers and a certificate to that effect is produced.

5.2.2.5. The Surveyor is to satisfy himself regarding the freeboard marks, where applicable.

5.2.2.6. The arrangements for fire protection, detection and extinction in small craft are to be annually examined. Acceptation of Surveys carried out by the National Authority of the country in which the small craft has been registered, shall be carried out, at the discretion of the Surveyor, for meeting these requirements.

5.2.3. Docking Surveys

5.2.3.1. A small craft is to be placed on blocks of sufficient height, when it is in drydock or on a slipway, and as may be necessary proper staging is to be erected, for the examination of the outside of hull, rudder and underwater fittings.

5.2.3.2. Attention is to be given to parts of the structure liable to deterioration appropriate to the hull construction material.

5.2.3.3. All openings to the sea from scuppers or discharges shall be attended carefully, together with valves and fastenings.

5.3. Special Surrey of small craft under 5 years old—Hull requirements

5.3.1. Preparation

5.3.1.1. the small craft is to be placed on blocks of sufficient height in a drydock, or on a slipway; as necessary, proper staging is to be erected, for the outside of the hull, rudder and underwater fittings to be examined. If considered necessary by the Surveyor, lifting of the rudder is to be conducted for examination of pintles.

5.3.1.2. As may be required by the Surveyor to satisfy himself as to the condition of all parts of the structure, opening of the interior of the small craft is to be examined by the removal of lining, ceiling/cabin sole, portable tanks and ballast, etc. For checking purpose, clearing and cleaning of integral tanks, machinery spaces and other spaces are to be done.

5.3.1.3. A sufficient amount of close ceiling/cabin sole is to be lifted to permit examination of the structure below for small craft having a single bottom.

5.3.1.4. Sufficient amount of ceiling/cabin sole is to be removed from the bilges and inner bottom in order to permit examination of the structure below for small craft having a double bottom.

5.3.1.5. For a proper examination of the hull, cleaning of the outside surface of the hull is to be carried out as may be required by the Surveyor.

5.3.1.6. Where the planking is sheathed with metal, such portions are to be removed as the Surveyor may direct, in wood small craft. The sheathing is to be checked, where sheathed with reinforced plastics or similar material, to ensure it is adhering satisfactorily and any possibility of water seepage occurring along plank edges has been avoided.

5.3.2. Examination and testing

5.3.2.1. The requirements of an Annual Survey are to be complied with.

5.3.2.2. Examination of all items and spaces required to be cleared and cleaned for examination by 5.3.1, are to be carried out.

5.3.2.3. The hull in way of all openings is to be attended carefully.

5.3.2.4. In steel small craft by drilling or other approved means, the Surveyor may require gauging the thickness of the material in any portion of the structure where signs of wastage are evident or wastage is normally found. Any parts of the structure are to be made good by materials of the approved scantlings and quality which are found defective or materially reduced in scantlings. The structure in way of discontinuities is to be attended carefully. The surfaces are to be recoated by paints as necessary.

5.3.2.5. Testing of the caulking of the outside and deck plating is to be done in wooden small craft and it shall be re-caulked as necessary.

5.3.2.6. In cases where the inner surface of the bottom shell is covered with cement, asphalt, or other composition, the removal of this covering may be dispensed with, provided that it is inspected, tested by beating or chipping, and found sound and adhering satisfactorily to the structure.

5.3.2.7. All integral tanks are to be tested by a head sufficient to give the maximum pressure that can be experienced in service. The Surveyor shall see, when examining tanks internally, that striking plates or other additional reinforcement is fitted under sounding pipes.

5.3.2.8. All decks, casings and superstructures are to be examined. The corners of openings and other discontinuities in way of decks and top sides shall be attended carefully.

5.3.2.9. The wood decks or sheathing is to be checked and testing of the caulking is to be carried out and re-caulked as necessary. The wood is to be renewed, if decay or rot is found or the wood is excessively worn. Attention is to be given to the condition of the plating under wood decks, sheathing or other deck covering. The sections are to be removed as necessary to ascertain the condition of the structure, when it is found that such coverings are broken, or are not adhering closely to the deck,.

5.3.2.10. The masts and standing rigging are to be checked.

5.3.2.11. The anchors are to be examined. The cables are to be examined when they are ranged. Renewal shall be done if any length of chain cable is found to be reduced in mean diameter at its most worn part by 11 per cent or more from its nominal diameter. The windlass is to be examined as well.

5.3.2.12. The Surveyor is to satisfy himself that there are suitable mooring ropes and a towline as per Rule requirement.

5.3.2.13. The steering gear, and its connections and control systems (main and alternative) are to be checked. Assembling and checking of the various parts of the auxiliary steering gear are to be examined.

5.3.2.14. The hand pumps, suctions, watertight/weather-tight doors, air and sounding pipes are to be checked.

5.3.2.15. The Surveyor is to satisfy himself as to the efficient condition of the following:—

a) Means of escape from:—

- machinery spaces,
- crew and passenger spaces, and
- Spaces in which crew are normally employed.

b) Means of communication between:—

- Bridge and engine room control station, and bridge and alternative steering position.

c) Fire protection, detection and extinction.

5.3.2.16. Consultation of 5.7 to 5.10 can be done for surveys of machinery, electrical equipment, screwshafts and tube shafts.

5.4. Special Survey of small craft between 5 and 10 years old— Hull requirements

5.4.1. Preparation

5.4.1.1. The requirements of 5.3.1 are to be complied with.

5.4.1.2. Internal surfaces of the chain locker are to be cleaned. For checking purpose, the chain cables are to be ranged. For examination purpose, the anchors are to be placed in an accessible position and cleaning of them shall be done.

5.4.2. Examination and testing

5.4.2.1. The requirements of 5.3.2 are to be complied with.

5.4.2.2. All items and spaces required to be cleared and cleaned for examination by 4.1 are to be examined.

5.5. Special Survey of small craft over 10 years old—Hull requirements

5.5.1. Preparation

5.5.1.1. The requirements of 5.3.1 and 5.4.1 are to be complied with.

5.5.1.2. For examination purpose, the rudder is to be unshipped.

5.5.1.3. As requested by the Surveyor, when sheathing of a wooden small craft is done with metal, such sheathing will at least permit an examination of the wood keel, garboards, plank ends, stem and sternpost is to be removed.

5.5.1.4. As may be required by the Surveyor, in wooden small craft, fastenings are to be drawn for examination.

5.5.1.5. Sufficient insulation is to be removed in each compartment to enable the Surveyor to satisfy himself of the condition of the structure, where the structure is insulated.

5.5.1.6. For examination purpose, all mast wedging is to be removed.

5.5.2. Examination and testing

5.5.2.1. The requirements of 5.3.2 and 5.4.2 are to be complied with.

5.5.2.2. All items and spaces required to be cleared and cleaned for examination by 5.1 are to be examined.

5.5.2.3. All the rudder stock and structure in way of the trunk is to be examined.

5.5.2.4. The shell plating between the light and load waterlines and the deck plating are to be gauged, by drilling or other approved means, for steel small craft of 15 years and not more than 20 years old, in addition to the gauging required by 5.3.2.4 to ascertain local wastage, to determine the amount of any general diminution in thickness. The gauging is to be carried out on each side of the small craft in at least four places.

5.6. First Special Survey held after the steel small craft is 20 years old and at every Special Survey thereafter—Hull requirements

5.6.1. General

5.6.1.1. The requirements of 5.3 to 5.5 are to be complied with.

5.6.2. Gauging

5.6.2.1. The shell plating and deck plating are to be gauged over the full length of the small craft, by drilling or other approved means, in addition to the requirements of 5.3.2.4 to ascertain local wastage, to determine the amount of any general diminution in thickness.

5.6.2.2. Removal of AU paint and rust are to be done entirely before the plates are gauged by the Surveyor, and the actual thicknesses are to be reported to the Committee in detail.

5.6.2.3. After making an internal and external examination, the thickness of bottom plating in way of cement is to be ascertained unless the Surveyor, is entirely satisfied that this is unnecessary. If required by the Surveyor, the selected portions of the cement are to be removed from the bottom and bilge.

5.6.3. Insulated spaces

5.6.3.1. Sufficient additional insulation is to be removed in each compartment to enable the Surveyor to satisfy himself of the condition of the structure, where the structure is insulated, and to enable the thickness of the shell plating to be ascertained as required by 5.6.2.

5.7. Machinery Surveys - General requirements

5.7.1. Docking Surveys

5.7.1.1. At each Survey, when the small craft is in drydock, the propeller, sterntube bush and sea connection fastenings and the gratings at the sea inlets are to be examined. The clearance in the stern bush or the efficiency of the oil gland is to be ascertained.

5.7.2. Complete Surveys

5.7.2.1. All openings to the sea in the machinery spaces, together with the valves, cocks and the fastenings by which these are connected to the hull, are to be examined, while the small craft is in drydock.

5.7.2.2. All shafts (except screwshafts and tube shafts, for which special arrangements are detailed in 5.10), thrust block and all bearings are to be examined.

5.7.2.3. The main engines are to be opened out and examined as detailed in 5.8.

5.7.2.4. The following essential components are to be surveyed :—

Main gearing. Auxiliary engines, air compressors, all pumps, heaters, coolers and filters used for essential services. Air receivers. Bilge, ballast, oil fuel, lubricating oil and cooling water systems. The holding down bolts and chocks of main and auxiliary machinery. Steering machinery. Windlass. Electrical equipment, according to 5.9. Fuel tanks not forming part of the structure of the craft.

5.7.2.5. The spare gear is to be checked.

5.7.2.6. To demonstrate that they are in good working order, where remote and/or automatic controls are fitted for essential machinery, they are to be tested.

5.7.2.7. The gas turbines, steam engines, boilers and steam pipes are to be examined according to the relevant requirements of the Periodical Survey Regulations given in Part 1 Chapter 3 of the Rules and Regulations for the Classification of Ships.

5.8. Oil engines - Detailed requirements

5.8.1. Complete Surreys

5.8.1.1. The requirements of 5.7 are to be complied with.

5.8.1.2. The cylinders, liners, cylinder covers, valves and valve gear, scavenging arrangements and blowers, pistons, connecting rods and crankshafts are to be inspected along with other components such as flexible couplings, gearings, attached pumps, cooling arrangements, starting air pipes and exhaust systems. The attending surveyor shall examine the crankshaft alignment.

5.8.1.3. The selected pipes in the starting air system are to be removed for internal examination and are to be hammer tested. The starting air system is to be thoroughly cleaned internally by steaming out, if any appreciable amount of lubricating oil is found in the pipes, or other suitable means. Some of the pipes selected are to be those adjacent to the starting air valves at the cylinders and to the discharges from the air compressors.

5.8.1.4. The maneuvering of engines is to be tested under working conditions. The initial starting arrangements are to be tested.

5.8.1.5. the condensing plant, feed pumps and oil fuel burning plant are to be examined and the steam pipes examined and tested as detailed in the Periodical Survey Regulation given in Part 1 Chapter 3 of the Rules and Regulations for the Classification of Ships, where steam is used for essential purposes.

5.9. Electrical equipment

5.9.1. Complete Surveys

5.9.1.1. As far as practicable, examination of electrical equipment and cables are to be carried out.

5.9.1.2. The insulation resistance of all circuits and apparatus is to be measured and is not to be less than 100,000 ohms. For this purpose, circuits and apparatus may be tested separately. A low voltage instrument is to be utilized, where the voltage of the insulation is 32 volts or less.

5.9.1.3. The protective devices are to be examined to verify that suitable protection is provided for the respective circuits.

5.9.1.4. The installation is to be tried under working conditions.

5.10. Screwshafts and tube shafts

5.10.1. Frequency of surveys

5.10.1.1. At intervals of 3 years for single screw small craft and 4 years for small craft having two or more screws, shafts with keyed propeller attachments and fitted with continuous liners or approved oil glands, or made of approved corrosion resisting materials, are to be surveyed. Provided that the forward portion of the shaft cone is

examined by an efficient crack detection method at each survey, having adequate root radius and the sharp edge of the keyway at the surface of the shaft removed, when shafts are fitted with keyways of the sled runner or round-ended type, they may be surveyed at intervals of 4 years for single screw small craft and 5 years for small craft having two or more screws.

5.10.1.2. Shafts having coupling flanges at the after end are to be surveyed at intervals of 5 years provided that they are fitted with approved oil glands, or are made of corrosion resisting materials.

5.10.1.3. Survey of all other shafts not covered by 5.10.1.1 or 5.10.1.2 is to be done at intervals of 2 years.

5.10.1.4. Directional propellers are to be opened up for examination of the working parts and control gear at intervals of 4 years, where fitting of directional propellers for main propulsion purposes are provided.

5.10.1.5. Survey of controllable pitch propellers are to be conducted at the same time as the screwshafts. The working parts and control gear are to be opened for examination.

5.11. Classification of small craft not built under survey

5.11.1. General

5.11.1.1. Application should be made to the Committee in writing, when classification is desired for a small craft not built under the supervision of the Surveyors of the Society.

5.11.1.2. When classed, periodical surveys of such small craft are subsequently to be held as in the case of small craft built under survey.

5.11.2. Hull and equipment

5.11.2.1. The plans showing the main scantlings and arrangements of the actual small craft together with any proposed alterations are to be submitted for approval. These should comprise plans of the midship section, longitudinal section and decks, and such other plans as may be requested. Facilities are to be given for the Surveyor of the Society to obtain the necessary information from the small craft, when plans cannot be obtained or prepared by the Owner.

5.11.2.2. The particulars of the process of manufacture and the testing of the material of construction are to be provided.

5.11.2.3. In all cases the full requirements of 5.3, 5.4, and 5.5 are to be complied with. In addition, steel small craft over 20 years old are, to comply with the requirements of 5.6.

5.11.2.4. The Surveyor is to satisfy himself regarding the workmanship and verify the approved scantlings and arrangements, during the survey. Parts of the structure will be required to be gauged as necessary, for this purpose, and in order to ascertain the amount of any deterioration. The full particulars of the anchors, chain cables and equipment are to be submitted. Fire protection, detection and extinction are to be according to these Rules. Special consideration shall be given to small craft of recent construction.

5.11.2.5. The Committee may consider granting an interim record for a limited period, when the full survey requirements indicated in 5.11.2.3 and 5.11.2.4 cannot be completed at one time. The conditions regarding the completion of the survey will depend on the merits of each particular case, submission of details of which shall be considered.

5.11.3. Machinery

5.11.3.1. To facilitate the survey, plans of the following items (plans of piping are to be diagrammatic), together with the particulars of the materials used in the construction of the boilers, air receivers and important forgings are to be furnished where applicable.

General pumping arrangements, including air and sounding pipes (Shipbuilder's plan).

Arrangements of the pump and drainage of cofferdams.

Bilge, ballast and oil fuel pumping arrangements in the machinery space, including the capacities of the pumps on bilge service.

Arrangement and dimensions of steam pipes.

Arrangement of oil fuel pipes and fittings at settling and service tanks.

Arrangement of oil fuel piping in connection with oil burning installation.

Oil fuel overflow system, where fitted.

Arrangement of boiler feed system.

Oil fuel settling, service and other oil fuel tanks not forming part of the craft's structure.

Boilers.

Air receivers.

Crank, thrust, intermediate and screw shafting.

Clutch and reversing gear with methods of control.

Reduction gearing.

Propeller (including spare propeller if supplied).

Electrical circuits

5.11.3.2. Unless the machinery is of a novel or special character affecting classification the plans additional to those detailed in 5.11.3.1 is not required to be submitted.

5.11.3.3. A description of the scheme(s) is to be submitted, where remote and/or automatic controls are fitted to propulsion machinery and essential auxiliaries. Particulars are to be given of the spare gear carried and whether maintenance is by repair or replacement.

5.11.3.4. Calculations of the torsional vibration characteristics of the propelling machinery are to be submitted for consideration, for new small craft and small craft which have been in service less than 5 years, as required for small craft constructed under Special Survey. The circumstances will be specially considered in relation to their service record and type of machinery installed, for older small craft. Where submission of calculations is not done, the Committee may require that the machinery certificate be endorsed to this effect. The calculations and investigation of the torsional vibration characteristics of the machinery may be carried out by the Society upon special request, when desired by the Owner.

5.11.3.5. As required at Complete Surveys, the main and auxiliary machinery, feed pipes, compressed air pipes and boilers are to be examined. Working pressures are to be determined from the actual scantlings according to these Rules.

5.11.3.6. The screwshaft(s) is to be drawn and examined.

5.11.3.7. The steam pipes, where fitted, are to be examined and tested as required by the Periodical Survey Regulations given in Part1 Chapter 3 of the Rules and Regulations for the Classification of Ships.

5.11.3.8. The bilge, ballast and oil fuel pumping arrangements are to be examined and found or modified to comply with Part 1 Chapter 3.

5.11.3.9. As required at Complete Surveys, the oil burning installations are to be examined and found, or modified, to comply with Part 1 Chapter 3 of the Rules and Regulations for the Classification of Ships; they are also to be tested under working conditions.

5.11.3.10. As required at Complete Surveys, the electrical equipment is to be examined.

5.11.3.11. The spare gear is to be according to Part 6 of the Rules and Regulations for the Classification of Ships.

5.11.3.12. The whole of the machinery, including essential controls, is to be tried under working conditions to the satisfaction of the Surveyor.

5.11.3.13. Special consideration will be given to the scope of the survey, where classification is desired for a small craft which is classed by another recognized Society.

CHAPTER 2 GENERAL ARRANGEMENT AND FREEBOARD

CONTENTS

SECTION 1 GENERAL

Contents

1.1 Application

1.1.1. Applications of the requirements of this Part of the Rules are done to the craft that is being subjected to the Register technical supervision which are in compliance with the requirements of Chapter 1Section 1 of the General Regulations. The Register shall specially consider the permit for the craft to operate in basins not complying with the conditions for a craft's design category which are specified in these Rules.

1.1.2. Applications of the requirements of this Part of the Rules are done to craft in service to the extent which is expedient and feasible. However for craft under construction and also for craft under conversion or major repair, they are mandatory, if their stability or freeboard depth is affected.

1.1.3. The deviations from the requirements of this Part of the Rules may be allowed by the Register provided that the equivalents in craft's design are ensured or specification of special restrictions on navigation conditions is done. In the Owner's Manual, the deviations, equivalents and specified restrictions shall be entered.

1.2 Definitions and Explanations

1.2.1. Section 1 of Chapter 1, 2 and 3 contains the definitions and explanations relating to the general terminology.

In this Part of the Rules, the following definitions and explanations are adopted:

Loaded displacement, Δ_{max} (m_{ldc}) means the mass of a craft in the loaded condition which includes the light craft mass Δ_{min} (m_{lcc}) and the maximum total load DW (m_{MTL}) being defined in the General Regulations for Small Pleasure Craft.

Air space means an air-tight space of hull structure.

Righting moment means a moment produced by gravity and buoyancy forces at the given heeling angle. It is denoted by M_R.

Load waterline (L_{WL}) is the waterline of a craft when upright at a loaded displacement and design trim.

Actual sail area, A'_S means an actual profile projected area of the specific combination of sails of a sailing craft.

Liquid cargo means all liquids on board including craft's liquid stores, ballast, etc.

Craft's liquid stores mean domestic waste waters and drinking water, fuel oil, lubricating oil in permanently fitted tanks.

Reserve of buoyancy means the weather tight volume of a craft's hull above a load waterline including the volumes of watertight superstructures and deckhouses.

Design category of craft means operational conditions which are expected in the concerned in the range of Navigation.

Well means any volume open to the sky that may retain water (cockpits, wells, open volumes or areas bounded by superstructures or continuous bulwark).

Initial metacentric height, h_0 is the elevation of a metacentre above a craft's centre of gravity with no craft's heel, and a measure of craft's transverse stability at small inclinations.

Corrected initial metacentric height, h is an initial metacentric height, h_0 corrected for the effect of free surfaces.

Minimum operating load means the sum of the following amounts: mass representing the minimum crew, positioned on the centre line near the highest main control station, which is assumed equal to:

— 75 kg where $L_H \leq 8$ m,

— 150 kg where 8 m < $L_H \leq 16$ m,

— 225 kg where 16 m < $L_H \leq 24$ m;

Life- saving appliances with a mass of not less than $(L_H – 2.5)^2$, kg;

Non- consumable stores and equipment normally carried on the craft;

Whenever the craft is afloat, water ballast in tanks to be filled;

A life raft (if any) fitted in the stowage provided; not more than 10 per cent of the total amount of the stores of fuel oil, fresh water and provisions.

Minimum operating displacement means a craft's mass comprising the light craft mass and the minimum service load. It is denoted by m_{MOC}

Mid ship section of craft means the transverse section of the craft's hull in the middle of waterline length L_{WL}.

Heeling moments are the assumed design values of moments statically and dynamically applied to a craft which correspond to a design model of their action on the craft.

Maximum permissible moments are the design values of moments being maximum permissible on condition that the craft's stability parameters required at its static and dynamic inclinations are ensured.

Freeboard, F means a distance measured vertically amidships between the deck line and waterline plane at the maximum draught. For undecked craft, the freeboard is assumed as a distance measured from the maximum draught plane till the upper edge of permanent side plating.

Superstructure is an enclosed secure and watertight structure on the freeboard deck extended from side to side of the craft or having the sides at a distance of not more than 4 per cent of a breadth BH inboard from the craft's side.

Inflated bag is a bag made of flexible material which is always to be inflated when the craft is being used.

Capsize means an event when a craft reaches any heel angle from which it is unable to recover to equilibrium near the upright without intervention.

Capsizing moment is an assumed design minimum dynamically-applied heeling moment resulting in a capsize of craft.

Displacement volume of craft, V_D means a volume of displacement of the craft to the appropriate loading condition.

Basic stability criterion is the ratio of the maximum permissible moment to the heeling moment due to wind or wind and waves.

Main sails mean sails which may be set under favourable navigational conditions.

Openings considered as open are openings in the upper deck or hull sides, as well as in decks, sides and bulkheads of superstructures and deckhouses of which closing appliances do not comply with the requirements of Section 9, Part III "Equipment, Arrangements and Outfit" as to their weather tightness, strength and dependability. Small openings like sea openings of craft's systems and pipelines which actually have no effect on stability in craft's dynamic heeling are not considered as open.

Freeboard deck is a continuous deck from which a freeboard is calculated.

Righting lever, l (static stability arm) is an arm of gravity and buoyancy couple at craft's heeling.

Windage area, A_{LV} means the projected lateral area of the above-water portion (hull, superstructures, deckhouses and spars, including awnings and dodgers) of a craft with no sails on the centre line plane with the craft in the upright position.

Correction for free surfaces is a correction to the initial value of a metacentric height allowing for a decrease in the craft's stability due to the effect of free surfaces of liquid cargoes.

Trim of craft means the attitude of a craft in water featured by mid ship draught *d*, heel θ and trim ψ. Unless otherwise specified, all dimensions and definitions relate to the craft's trim in calm water at the design displacement and design trim in the upright position.

Crew limit, C_L means the maximum number of crew (with a mass of 75 kg each) which does not exceed the number of seats provided for accommodation.

Maximum permissible angle of heel means an angle of heel which is not to be exceeded under these Rules

Design trim means the longitudinal attitude of a craft when upright with crew, stores and equipment in the positions designated by a designer or builder.

A vertical distance measured between the deepest permitted draught plane and the lowest point of an opening considered as open or having water tightness degree 2, 3 or 4 is known as down flooding height.

A wind speed used for calculating stability and buoyancy of pleasure craft is known as calculation wind speed, also denoted by v_W.

Light craft condition means the condition of a craft with no stores and people on board fully equipped for use.

The light craft condition with the maximum total load added at the design trim and the distribution of crew is known as loaded displacement condition.

The ability of the appliance or surface in order to provide protection against ingress of water is known as water tightness degree of closing appliance.

Degree 1: Degree of tightness that is providing protection against effects of continuous immersion in water.

Degree 2: Degree of tightness that is providing protection against effects of temporary immersion in water or getting a wash.

Degree 3: Degree of tightness that is providing protection against splashing water.

Degree 4: Degree of tightness that is providing protection against water drops falling at an angle of up to 15° from the vertical.

Light craft means a craft which is fully ready for use.

Type of craft: for the purpose of this Part of the Rules, craft are subdivided into five types arbitrarily designated as A, B, C, D and E.

Type A

– Fully decked craft. The fully decked craft means a craft in which the horizontal projection of the sheer line area comprises any combination of: watertight deck and superstructure, and/or quick-draining well or cockpit complying with the requirements of Chapter 3 Section 10.

Chapter 3 Section 2 to 5 of this Part, and/or watertight wells or cockpits complying with the requirements of Part 3 with a combined volume of less than LH×BH×FM/40, provided that all

craft's closing appliances have the adequate strength, stiffness and water tightness degree complying with the requirements of Section 9 Chapter 2 "Equipment, Arrangements and Outfit", as well as:

For craft of design category **R** and **R100** – plan area of all wells shall be less than 0.2 $L_H B_H$, at that plan area of all recesses forward of $L_H/2$ shall be less than 0.1 $L_H B_H$;

For craft of design category **R200** and B – plan area of all wells shall be less than 0.3 $L_H B_H$, at that plan area of all wells forward of $L_H/2$ shall be less than 0.15 $L_H B_H$

Type B – pontoons and similar craft. In order to get an access to compartments, these craft shall have a continuous deck with small openings and the openings shall have steel or equivalent watertight closing appliances provided with gaskets. With any one compartment damaged, the watertight deck of such craft shall remain above the water surface around the entire periphery.

Type C – open craft. The open craft are craft of types A and B having hatch covers of the inadequate strength, stiffness or water tightness degree, or hatches without closing appliances.

Type D – partially decked craft. These are deemed as the craft of which over two thirds of the craft's length (including one third of the length from the bow) may be considered as type A or B, and which have cockpits meeting the requirements of Section 10, Part III "Equipment, Arrangements and Outfit" within the remaining length of the craft.

Type E – undecked craft. These are deemed as the craft of which less than two thirds of the craft's length may be considered as type A or B, and/or which have cockpits with a total coefficient by volume $K_C \geq 1$, and/or the cockpits not meeting the requirements of Section 10, Part III "Equipment, Arrangements and Outfit".

Angle of vanishing stability, θ_V means an angle of heel, in deg, other than zero at which the righting moment is equal to zero; determined assuming that there is no offset load.

Down flooding angle, θ_D means an angle of heel at which the craft's interior spaces are flooded by water through openings considered as open, or over board or coamings.

Angle of maximum of righting lever curve, θ_M means an angle of heel at which the maximum righting lever occurs.

Centre of lateral resistance (C_{LR}) means the geometric center of the projection of the craft's underwater hull onto the centerline including appendages.

Windage Centre (W_C) means the geometric centre of a corresponding windage area. Beam between hull centres, B_{CB} is a transverse distance between the centres of buoyancy of the side hulls.

Flotation element means independent tanks, inflated bags and low density materials providing the necessary reserve of buoyancy to the craft in case of its hull damages.

1.3 General Technical Requirements

1.3.1. Methods which are generally accepted in the naval architecture shall be used for all calculations. When using a computer, the Register shall approve the methods of computation and programme.

1.3.2. To a scale of at least of 1:20, the lines plan shall be made; in doing so, the largest ordinate shall not be less than 100 mm. The width of the projection “body plan” that is used for measuring ordinates for calculations shall be not less than 300 mm, where computerized design is not used in calculating form- stability arms. The requirement on dimensioning the projection “body plan” may be ignored where the lines plan is constructed as the computerized mathematical model of the hull, and buoyancy and stability calculations are also computer-aided with the automatic transformation of the hull shape to a calculation program.

1.3.3. Calculation of cross-curves of stability

1.3.3.1. The calculation of cross-curves of stability shall be carried out to the waterline which is parallel to the design waterline. The calculations of cross curves of stability shall be carried out with due regard for the trim, if the craft is shaped and arranged so that the effect of trim associated with inclinations essentially affects righting moment values.

The superstructures located above the freeboard deck are ignored when calculating the cross-curves of stability.

1.3.3.2. The small-scaled layout chart of a hold coaming shall be included in the diagram of cross-curves of stability, as well as of a companion way to an engine room, a deckhouse, and the designations of down flooding angles referred to an open hole.

1.3.3.3. For the lowest open hole at the craft’s side, on deck and in super structure, the calculation of cross-curves of stability shall be supplemented with a curve of down flooding angles.

1.3.4. Under all loading conditions potential in operation, only in bottom tanks of domestic or potable water liquid ballast may be taken and only due to force majeure.

1.3.5. Where the worse loading conditions with regard to stability, as compared with the above listed, are allowed in normal operation, additional verification of the stability under those conditions shall be done.

1.3.6. For all loading conditions that are in question, righting lever curves corrected for the effect of free surfaces of liquid cargoes shall be plotted. In compliance with the requirements of 1.3.4, corrections are computed.

1.3.7. The width of enclosures on deck shall be within 1 m. With a greater width, the volume of incoming water in flooding the enclosure shall be considered as liquid cargo.

1.3.8. Given the openings considered as open, through which water may penetrate into the hull, the righting lever curves are accepted as effective to a down flooding angle.

1.3.9. Calculation of liquid cargo effect

1.3.9.1. Tanks for each kind of liquid cargo and ballast, which may simultaneously have free surfaces in craft's operation, shall supplement the tanks considered in computing the free surfaces effect of craft's liquid stores on stability at large angles of inclination. In order to allow for the free surface effect, one design combination of single tanks or their combinations for each kind of liquid cargo shall be drawn up. Only those producing the greatest total heeling moment ΔM_{30} due to liquid overflow at the craft's heel of 30° should be selected, considering the number of tank combinations for the individual kinds of liquid cargo or for single tanks likely to occur in operation. In all cases, the correction shall be computed with the tank filled by 50 per cent of its capacity.

1.3.9.2. The tanks which complies with the following condition below can be ignored:

$$L_{30} \cdot \upsilon_t \cdot b_t \cdot \gamma \cdot \sqrt{C_B} < 0.01 \cdot \Delta_1,$$

Where a_t, b_t, v_t = overall dimensions (along base planes): width, depth and volume of tank;

γ = density;

C_B = block coefficient of tank;

Δ_1 = displacement at the most unfavourable loading condition in magnitude of h and l;

l_{30} = non-dimensional factor according to Table 2.1.1

Table 2.1.1: Factor l_{30}

b_t / a_t	l_{30}	b_t / a_t	l_{30}
20	0.111	1	0.049
10	0.113	0.5	0.024
5	0.114	0.2	0.010
2	0.094	0.1	0.005

1.3.9.3. In compliance with the instructions of 1.3.4.1, the selection of the tanks included in the design combination for considering the free surface effect on initial stability shall be done, with the difference that proceeding from the initial stability the tanks shall be selected in the maximum value of Δm_h which is equal to the product of the intrinsic moment of inertia of free surface for a craft in the upright position by the density of liquid cargo.

1.3.9.4. The tanks complying with the following condition below can be ignored:

$$\Delta m_h = 0.0834 \cdot v_t \cdot b_t \cdot \gamma \cdot \sqrt{C_B} \cdot \frac{b_\tau}{a_\tau} < 0.01\, \Delta_{min}$$

Where Δm_h = correction to stability coefficient to allow for liquid cargo effect;

Δ_{min} = displacement corresponding to the craft's minimum loading condition regulated by these Rules. The residues of liquids which are usual in emptied tanks are ignored in calculations.

1.3.10. The deck plans of craft shall display the areas specified for people accommodation and movement, and also the maximum potential crowding of people at one side for the worst case.

1.3.11. Calculation of windage area

1.3.11.1. The projections of the following items on the centre line plane: all continuous walls and surfaces of the hull, super structures and deckhouses; rig, ventilators, boats, deck machinery, all awnings which may be set in stormy weather, as well as the projections of side surfaces of the deck cargoes specified shall be included in the windage area. The summation for continuous elements does not apply, where projections of various elements are superimposed one upon the other. The windage area does not include the projection of discontinued surfaces superimposed onto the projections of continuous elements. Determination of the windage area of sailing craft is done for each sail combination of the set of sails specified, including reefing. The windage area variants for the sailing craft are used in assessing stability with the corresponding values of wind strength or velocity according to the set of sails specified for use taking into account the provisions mentioned in Chapter 3.

1.3.11.2. It is recommended to take into account the windage of discontinued surfaces of rails, rigging and various small items by increasing the total windage area of continuous surfaces, which is determined for the minimum draught, by 5 per cent and the static moment of this area by 10 per cent. The above approximate methods to allow for the windage of discontinued surfaces and small items are not mandatory. With the help of detailed calculation, wherever it is necessary those parts of windage may be

determined. In this case, for calculating the windage of discontinued surfaces like the craft's rig, rails, frames of the lattice type, etc., the overall areas taken into account shall be multiplied by the filling factors assumed equal to:

0.6 – for netted rails;

0.2 – for not netted rails;

0.5 – for structures of lattice type;

0.6 – for rigging

The area of the projections of a hull above waterline, as well as of superstructures and deckhouses of the traditional (other than streamlined) type shall be considered with a flow coefficient equal to 1.0.

If confirmed by corresponding experimental and design data, assumption shall be made for the areas of the projections of superstructures and deckhouses of the streamlined type may be assumed with the flow coefficient of at least 0.6. The areas of the projections of detached and streamlined elements (masts, smoke funnels, ventilators, etc.) of the craft should be assumed with the flow coefficient of 0.6. A method which is generally applied for determining the coordinates of the centre of gravity for a plane figure shall be applied for determining the position of the centre of windage area.

1.3.11.3. A righting lever curve shall be plotted up to an angle of 80° with a spacing of 10°. The righting lever curve of the craft shall be plotted up to an angle of 180° with a spacing of 10° where the crew's strength ensures righting. The craft's righting lever curve shall be plotted, as a minimum, up to a downflooding angle θ_D or an angle of vanishing stability, θ_V whichever is greater. Righting lever curves shall be plotted allowing for the potential effect of free surfaces of liquids. The correction to a metacentric height for the effect of free surfaces of liquids in the specific loading condition of a craft is computed for the tanks, which have free surfaces of liquids, assuming that they are filled to the extent at which the correction is the greatest within the tank capacity, irrespective of the actual tank filling, for the craft when upright without trim. The tank is considered as completely filled which is filled to more than 98 per cent of its capacity. While calculating stability, the residues of liquids which are usual in emptied tanks (up to 50 mm deep) are ignored.

1.3.12. Loading condition

1.3.11.4. Unless otherwise specified, checking of the craft's stability shall be done for the following loading conditions: craft in fully loaded condition at loaded draught; craft with minimum service load; craft with minimum service load without crew.

1.3.11.5. Depending on the type and purpose of craft, in addition to the requirements of 1.3.13.1, checking of the craft's stability shall be done in compliance with the requirements of 2.7.

1.3.11.6. Checking of the stability shall also be done for the loading conditions, if these conditions anticipated in normal service of a craft as regards stability are less favourable than those listed in 1.3.13.1 or stated in 2.7.

1.3.11.7. The light-craft condition shall include the mass of solid ballast on board craft.

1.3.13. For all the loading conditions under consideration, curves of stability computed considering the correction for the effect of free surfaces of liquid cargoes, including the free surfaces of the accumulated oily mixtures shall be plotted.

1.3.14. In compliance with the requirements of this Part, the summary tables of the results of calculating the displacement, the position of centre of gravity, initial stability and trim, as well as the summary tables of the results of stability checking shall be drawn up.

1.3.15. Requirements for Information on Stability

1.3.16.1. In order to provide adequate stability of craft in service, the Information on Stability approved by the Register and containing the data below shall be issued to the craft:

a. Craft's main characteristics and data resulting the trim and stability calculations, including damaged condition, and also the tests for type design loading conditions specified;

b. Data on inclining test;

c. Operational, navigational and other restrictions pertinent for craft's safety in order to prevent downflooding and capsizing;

d. Instructions, diagrams, tables and other data to provide a possibility for assessing craft's stability in service considering

e. instructions on mandatory arrangements when forced to tow another craft to render assistance;

f. Recommendations on arrangements to improve stability

1.3.16.2. It shall be noted in the Information that essentially the stability of the craft depends on the way of craft's operation. It is obligatory for the master to observe the operational restrictions for craft that is stated in the Information on Stability, security measures, and also to bring about all pertinent

arrangements on ensuring craft's stability under all operational conditions and in an emergency.

The Information on Stability shall contain an entry: "Compliance with the requirements of this Information does not relieve the Master, and in his absence, the person in charge of craft's safety from responsibility for stability and the necessary reserve of buoyancy of the craft during operation".

1.3.16.3. During the development of the instructions for the owner/master, the recommendations on selecting the craft's moving direction and speed relative to sea allowing for potential capsizing due to broaching or getting into (main and parametric) resonance conditions of rolling shall be included. The Information on Stability for any craft shall include the following entries:

"Under way in following sea with wave intensity of more than IV, at a craft's speed over ... m/s, the craft can capsize. While running beam to the sea at the sea state close to the one limiting the craft's navigation, the craft can capsize." The maximum permissible speed of the craft in a following sea, in m/s, is determined by formula

$$V_s = 0.7\sqrt{L_H}$$

The guidance to the Master may contain the sections from the IMO document MSC/1/Circ.1228: cautions; dangerous phenomena; operational guidance on avoiding dangerous situations, including useful, in the developer's view, information. The recommendations shall not be overloaded with well-known provisions of good marine practice.

1.3.16.4. Depending on the calculations carried out in compliance with these Rules, the information on Stability shall be compiled.

An inclining test of this craft shall confirm the information on stability for the lead (first) craft in series and in doing so the discordancies identified with design quantities shall meet the requirements of 1.4.14.2.

The inclining test/light-weight check carried out in compliance with 1.4 of this Part of the Rules shall confirm the Information on Stability for series-built craft.

The Information on Stability compiled for the first craft of one series may be used for the following craft of this series if the inclining test/light-weight check results for the craft compared meet the following conditions:

a. Difference in the light craft displacement is within 2 per cent and in the height of the centre of gravity is within 5 per cent, but comprises not more than 4 cm;

b. Difference in the abscissa of the centre of gravity is within 1 per cent of the length between perpendiculars of the craft;

c. Requirements of this part of the rules are met in the worst, with regard to stability, loading conditions recalculated on the basis of the craft's inclining test.

1.3.16.5. Particulars on damage stability and buoyancy compiled on the basis of calculations shall be included in the Information on Stability for the craft of design categories **R, R100, R200** and **B.**

1.3.16.6. The Information on Stability shall include the corresponding recommendations on the basis of calculations which are confirmed by experiments in craft's testing if a capsized craft has a possibility to regain its upright position by crew.

1.3.16.7. The Register shall approve the Information on Stability.

1.3.16.8. The Owner's Manual of a craft that is approved by the Register, may insert the Information on Stability as a separate section. The Owner's Manual shall include entry on the mandatory fulfillment of the Information on Stability requirements if the Information on Stability is issued as a separate document.

1.4 Inclining Test and Light-Weight Check

1.4.1. To be inclined are:

1.4.1.1. Series-built craft as per 1.4.2;

1.4.1.2. Every craft of non-series construction;

1.4.1.3. Every craft after reconstruction;

1.4.1.4. Craft after major repair, conversion or modernization as per 1.4.3;

1.4.1.5. Craft after installation of permanent solid ballast as per 1.4.4;

1.4.1.6. Craft in service at time intervals within 10 years, if necessary, as per 1.4.5;

1.4.1.7. Craft of which stability is unknown or shall be verified;

1.4.1.8. Craft in initial survey for the assignment of class according to these rules requirements.

1.4.2. Of the series of craft under construction at each shipyard, to be inclined are:

1.4.2.1. The first craft, then every fifth craft (i.e. sixth, eleventh, etc.). As per 1.4.14, the rest series-built craft shall be subjected to the light-weight check. Depending on the

seasonal conditions at craft's delivery and subject to special agreement with the Register, the inclining test of the craft may be reserved for the next craft in the series. Beginning from the twelfth craft in the series, the Register may require to incline the lesser number of craft if it is demonstrated to the satisfaction of the Register that in the process of constructing the craft of the series the stability of their mass and the position of the centre of gravity is ensured within the limits specified in 1.4.4.2.b;

1.4.2.2. A series-built craft wherein structural modifications, as compared with the first craft of the series, according to the calculation result in:

a. the change of the light craft displacement by more than 2 per cent; or

b. the increase of the height of the light-craft centre of gravity simultaneously exceeding 4 cm and the value that is determined by the formulae:

$$\delta z_g = 0{,}1\ \frac{\Delta_1}{\Delta_0}\ l_{max}\ ,$$

$$\delta z_g = 0{,}1\ \frac{\Delta_1}{\Delta_0}\ h,$$

Whichever is less, where Δ_0 = light-craft displacement;

Δ_1 = craft's displacement under the most unfavorable loading condition with regard to a value of h or l_{max}.

l_{max} = maximum lever of the righting lever curve at the worst, with regard to its value, design loading condition;

h = corrected initial metacentric height under the most unfavorable design loading condition as regards its value;

or

c. violation of the requirements of this Part of the Rules for design loading conditions with:

$$z_g = 1.2\ z_{g2} - 0.2\ z_{g1},$$

Where z_{g1}(z_{g2}) = design light-craft vertical centre of gravity prior to (after) structural changes;

z_g = assumed light craft vertical centre of gravity.

Such craft shall be considered the first craft of a new series regarding stability, and the inclining test procedure for the following craft shall meet the requirements of 1.4.2.1.

1.4.3. After reconstruction, major repair, conversion or modernization, to be inclined are the craft wherein structural modifications, as shown by calculation, result in:

1.4.3.1. Change of load (total mass of loads removed or added) by more than 6 per cent of the light-craft displacement; or

1.4.3.2. Change in the light-craft displacement by more than 2 per cent; or

1.4.3.3. Increase in the light-craft vertical centre of gravity by more than the value computed as per 1.4.2.2.b; or+

1.4.3.4. Violation of the requirements of this part of the rules for design loading conditions as specified in 1.4.2.2.c. According to the calculation results if no inclining test is required, in compliance with 1.4.14 the light-weight check shall be carried out. Irrespective of the submission of calculations, the Register in compliance with 1.4.1.7 the inclining test of the craft is to be performed, proceeding from the craft's technical condition.

1.4.4. After installation of the permanent solid ballast every craft shall be inclined. The inclining test of the ship may be omitted if the Register is satisfied that when installing the ballast, efficient control is affected to ensure the design values of mass and centre of gravity position, or these values can be properly confirmed with the help of calculation.

1.4.5. In accordance with 1.4.1.6 for determining a need to incline the craft, the light-weight check shall periodically be carried out (experimental determination of the light craft displacement and the longitudinal centre of gravity). At intervals not exceeding five years, the light-weight check shall be performed. If a change in the light-ship displacement by more than 2 per cent or in longitudinal centre of gravity by more than 1 per cent of the ship's length as compared to the approved Information on Stability is found out as a result of the light-weight check then the craft shall be inclined.

1.4.6. Where the inclining test results for the craft built show that the light-ship vertical centre of gravity exceeds design value to the extent that involves the violation of the requirements of the present Part, to the Inclining Test Report the calculations with explanation of the reasons of such differences shall be attached. On examining the documents that are submitted, or in case of their absence, the Register may demand the performance of the repeated (check) inclining test of the craft. In this case, submission of both the Inclining Test Records shall be done to the Register for consideration.

1.4.7. Except for the craft engaged on international voyages, provided that the 20 per cent increase of the light craft centre of gravity, as compared with the design value, does not violate the requirements of this Part of the Rules, the Register may, as a ship owner's wish, dispense a newly-built craft from the inclining test.

1.4.8. Craft's loading during the inclining test shall be as far as practicable close to the light-craft displacement. The mass of missing loads shall be not more than 2 per cent of the light-ship

displacement, and the mass of surplus loads less inclining ballast and ballast according to 1.4.9 – 4 per cent.

1.4.9. The metacentric height of the craft in the process of the inclining test shall be at least 0.20 m. For this purpose necessary ballast may be taken. When water ballast is taken, the tanks shall be carefully pressed up.

1.4.10. In order to determine the angles of heel during the inclining test, at least two pendulums of at least 2 m and over long, or at least two Register-approved devices shall be fitted, or a special Register-approved arrangement for use in the inclining test shall be applied.

1.4.11. The value of a metacentric height obtained may be used in calculations with no deduction for a probable error of the test, if the inclining test is accurately carried out.

The inclining test results are acceptable if:

1.4.11.1. For each measurement the following condition is fulfilled:

$$|h_i - h_k| \leq 2\sqrt{\frac{\Sigma(h_i - h_k)^2}{n-1}}$$

Where h_i = metacentric height obtained in a single measurement;

$h_k = \Sigma\, h_i / n$ − metacentric height obtained in inclining the craft;

n = number of measurements.

The measurements, which do not meet the above condition, are ignored in processing the test results with the corresponding correction of the total number n and the repeated calculation of the metacentric height h_k. No more than one measurement may be ignored (greater number of measurements may be excluded only if justified and agreed with the Register);

1.4.11.2. Probable error of the test

$$t_{an}\sqrt{\frac{\Sigma(\mathrm{hi}-\mathrm{hk})^2}{\mathrm{n}(\mathrm{n}-1)}}$$

fulfills the condition:

$$t_{an}\sqrt{\frac{\Sigma(\mathrm{hi}-\mathrm{hk})^2}{\mathrm{n}(\mathrm{n}-1)}} \leq 0.02\,(1 + \mathrm{h_k}) \text{ if } h_k \leq 2 \text{ m; (1.4.11.2-1)}$$

$$t_{an}\sqrt{\frac{\Sigma(\mathrm{hi}-\mathrm{hk})^2}{\mathrm{n}(\mathrm{n}-1)}} \leq 0.01\,(4 + \mathrm{h_k}) \text{ if } h_k > 2 \text{ m. (1.4.11.2-2)}$$

Factor t_{an} is taken from Table 2.1.2:

Table 2.1.2

n	8	9	10	11	12	13	14	15	16
t_{an}	5.4	5.0	4.8	4.6	4.5	4.3	4.2	4.1	4.0

1.4.11.3. Considering the values of h and l_{max} and the worst loading conditions corresponding thereto, the following condition is met

$$t_{an}\sqrt{\frac{\Sigma(hi-hk)^2}{n(n-1)}}\cdot\frac{\Delta_0}{\Delta_1} \leq \varepsilon \text{, (1.4.11.3)}$$

Where ε = 0,05 h or 0,10 l_{max},

Whichever is less, but at least 4 cm;

1.4.11.4. Total number of satisfactory measurements is not less than 8.

1.4.12. Where the requirements of 1.4.11 are not met, it is allowed, if agreed with the Register, to use for calculations the value of the metacentric height obtained in the inclining test less the probable error of the test computed according to 1.4.11.2.

1.4.13. In compliance with the instructions on the inclining Test, the inclining test shall be carried out and the Register's Surveyor shall be witness it.

Other methods of experimental determining the light craft weight and the position of its centre of gravity may also be used, provided that it will be demonstrated to the satisfaction of the Register that the accuracy of the inclining test results meets the present requirements.

1.4.14. The light-weight check of a craft implies experimental determining the light craft displacement and the abscissa of its centre of gravity in compliance with the instructions on check-weighing of the Rules for Technical Supervision during Construction of Ships and Manufacture of Materials and Products for Ships). The light-weight check is carried out for determining:

1.4.14.1. A need to conduct the inclining test in compliance with 1.4.5;

1.4.14.2. The possibility of applying the values of the light craft displacement and the coordinates of its centre of gravity in stability documents which were obtained:

In the inclining test of the previous series-built craft –for series-built craft constructed at the same shipyard, by the same drawings and not being subject to the inclining test in compliance with 1.4.2.1; by calculation – for any series-built craft with certain distinctions in the light craft displacement from the previously inclined craft, which do not exceed the values specified in 1.4.2.2, or for the craft in service subjected to modifications and for which the light craft displacement changes may be calculated and do not exceed the values specified

in 1.4.3. If the light craft data resulting the light-weight check differ from those in the stability information by not more than 2 per cent for the light craft displacement and by not more than 1 per cent of the craft's length between perpendiculars for the longitudinal position of the light craft's centre of gravity then in each of the above cases, no corrections of the stability documents are needed. Otherwise, the craft shall be subjected to the inclining test with the follow-up correction of the stability documents.

1.5 Deviations from The Rules

1.5.1. If doubts arise with regard to stability of any craft when the requirements of the present Part are formally complied with, the Register may require checking of the craft's stability against additional criteria. In case where the requirements set forth in the present Part are considered to be too severe, the Register may permit, on a well-grounded statement of design and service bodies, appropriate departures from these requirements for the craft concerned.

1.5.2. When a ship navigating in a particular area does not comply with the requirements of the present Part, depending upon the craft's stability characteristics, service conditions and purpose the craft is intended for, the Register may, in each particular case, either restrict the craft's area of navigation or place other limitations.

SECTION 2 STABILITY

Contents

2.1 Basic Stability Criteria

2.1.1. On meeting the basic stability criteria, application of the requirements are done to all the displacement craft.

2.1.2. Assumptions are made for the craft's stability to be adequate if the craft meets the criteria, which is specified according to its design category and type, in the worst, with regard to stability, loading condition, while navigating within the specified navigational area and following to the place of refuge.

2.1.3. The assessment of craft's stability is done for the following basic criteria:

Under breaking wave conditions, weather criterion considering breaking waves is used to assess the craft's stability. The application of the criterion is done to mono hull craft of design categories **R**, **R100**, **R200**, **B** and **R0**. A weather criterion below applies to multihulls of those design categories.

In order to navigate in the specified service area, weather criterion is used to assess the craft's stability. The application of the criterion is done in order to assess the stability of all the craft of categories C_1 and C_2

In order to assess the mono hull craft's stability for design categories **R**, **R100**, **R200** and **B** weather criterion on a following wave top is used**.**

In order to assess the craft's stability for design categories $\mathbf{C_3}$ and **D**, wind stiffness criterion is used.

Stability criteria specified in 2.1.8 and 2.1.9 to fit craft's specific design categories.

2.1.4. Weather criterion

The weather criterion is defined by the moment ratio

$$\frac{M_{per}}{M_w} \geq 1.0,$$

Where:

M_{per} = maximum permissible moment, in kNm, determined according to 2.3.2 considering craft's motions in the seas according to 2.2.2;

M_w = heeling moment, in kNm, due to the wind pressure determined according to 2.2.1.

2.1.5. Weather criterion considering breaking waves:

The weather criterion considering breaking waves is defined by the moment ratio

$$M_{per} / M^d_w \geq 1.0,$$

Where

M_{per} = maximum permissible moment, in kNm, specified in 2.1.4 considering craft's motions in the seas according to 2.2.2; however, the design amplitude of rolling for the design category C craft may be determined only according to 2.2.2.2;

M^d_w = dynamic heeling moment, in k Nm;

$\mathrm{M}_{\mathrm{w}}^{\mathrm{d}} = M_w + M_v$;

M_w = heeling moment, in k Nm, due to the wind pressure determined according to 2.2.1;

M_v = heeling moment, in k Nm, due to an impact of breaking waves determined according to 2.2.3. Where this criteria is impracticable to meet, the parameters of a righting lever curve are subject to special consideration by the Register with due regard for the opportunities of righting the craft from a bottom up position as specified in a design.

2.1.6. Weather criterion on a following wave top

The criterion defines the adequacy of craft's initial stability allowing for the effective waterline area lost:

$h + \Delta l_{10} > 0$

Where

h = initial metacentric height, in m;

Δl_{10} = increase of the static stability arm, in m, determined according to 2.2.4.

2.1.7. Wind stiffness criterion

The wind resistance criterion is defined by the moment ratio

$$\frac{M_{per}}{M_w} \geq K_w \quad ,$$

Where

M_{per} = maximum permissible moment, in kNm, determined according to 2.3.3;

M_w = heeling moment, in k Nm, due to the wind pressure determined according to 2.2.1;

K_w = wind stiffness criterion assumed equal to:

1.0 – for type A or B craft;

1.15 – for type D or C craft;

1.50 – for type E craft

2.1.8. Stability in turning

2.1.8.1. Verification of the stability of motor craft, which meet the requirements in 1.2.2, Part I "Classification", shall be done for the effect of heeling moment that is acting on the craft during the turning at the worst, regarding stability, loading condition. An angle of static heel in turn shall not exceed: 12° or 80 per cent of the value of a downflooding angle; or the angle at which the freeboard deck immerses; or the angle at which the bilge emerges at its middle; or 15° considering the joint action of the simulated heeling moment due to the crowding of passengers to one side defined in 2.5 of this Part of the Rules, and the heeling moment in steady turning; whichever is less.

2.1.8.2. The heeling moment acting on the craft during turning, M_R, in kNm, is computed by the procedure agreed with the Register or is determined by the formula:

$$M_R = c\,\Delta \frac{v^2\left(z_g - \frac{d}{2}\right)}{L},$$

Where L and d = craft's length and draught up to effective waterline, respectively, in m;

Δ = displacement at the draught up to the effective waterline, in kN;

z_g = elevation of craft's centre of gravity above the base line, in m;

v = full speed in calm water on straight course, in m/s;

c = factor determined by maneuverability tests of a prototype craft, but at least 0.2.

2.1.9. Additional criteria

The additional requirements that are set forth in 2.7 shall be met, while depending on the craft's purpose, its structural details and operational conditions.

2.2 Calculation of External Action Parameters

2.2.1. Determination of the heeling moment M_w, in kNm, due to wind pressure on the above-water portion of a craft is done by formula

$$M_w = A_{LV}(Z_{WC} + a_1 a_2 d_A) p_W \cdot 10^{-3}, \quad (2.2.1\text{-}1)$$

Where A_{LV} = craft's windage area, in m^2, to be assumed equal to $A_{LV} = 0.55\, L_H B_H$ for the craft of design categories **R**, **R100**, **R200** and **B** if $A_{LV} < 0.55\, L_H B_H$;

p_W = design wind pressure, in P_a.

The design wind pressure P_W for all types of craft, in P_a , is determined by the formula:

$$P_w = W_{ST} + W_D,$$

Where W_{ST} and W_D = static and dynamic components of wind loading, respectively, to be determined according to Section 4,[4.3.4] in General Regulations on Small Pleasure Craft. While calculating the static and dynamic components of wind loading, assumptions are made for the wind pressure is at the height equal to the sum of the height of a windage centre above waterline and half the wave height with 3 per cent probability of exceeding a certain level, $h_{3\%}$, in accordance with the craft's operational area;

Z_{WC} = elevation of the windage centre above the waterline plane, in m;

d_A = draught determined as the doubled distance from a design waterline to the parallel thereto neutral axis of inertia of the area of the craft's centre plane underwater part (A_{CL}), allowed for hull keels excepting centre boards/leeboards and appendages.

It is allowed to assume d_A equal to a mid-length draught for the craft with a simply shaped underwater area;

a_1 = factor allowing for the effect of water resistance to- craft's lateral drift forces on a heeling arm assumed according to Table 2.2.1 depending on the ratio B_H / d_A .

Table 2.2.1

B_H / d_A	<2.5	3.0	4.0	5.0	6.0	7.0	8.0	9.0	10.0
a_1	0.40	0.41	0.46	0.60	0.81	1.00	1.20	1.28	1.30

a_2 = factor allowing for the effect of inertia forces on a heeling arm z to be determined according to Table 2.2.1depending on the ratio z_g/B_H (z_g = elevation of a centre of mass above the craft's base plane, in m).

Table 2.2.2

z_g/B_H	≤ 0.15	0.20	0.25	0.30	0.35	0.40	≥ 0.45
a_1	0.66	0.58	0.46	0.34	0.22	0.10	0

2.2.2. Design roll amplitude θ_r, in deg, is assumed for mono hulls as the greatest of the values defined by the requirements in 2.2.2.1 to 2.2.2.3 correspondingly to the craft's type and the characteristics of the navigational area in question, or by other procedures recognized by the Register for small pleasure craft. In compliance with 2.2.2.3 and 2.7.5 of this Part of the Rules, the design roll amplitude for catamarans is determined. The Register shall specially consider the Roll calculations for other multihulls. Only in 2.2.2.3, the requirements defines the design roll amplitude for sailing craft carrying the sails of a total area over 25 per cent of the standard one.

2.2.2.1. The design roll amplitude of 3 percent probability of exceeding a certain level, $\theta_{3\%}$, in rad, is recommended to determine by the formula:

$$\theta_{3\%} = 2.64\sqrt{D_\vartheta}\,.$$

a) The dispersion of heeling angles D_ϑ, in rad^2, is determined by formula

$$D_v = \frac{h_0 - 3\,h_1\theta_v^2}{6h_1}\sqrt{\left(\frac{h_0 - 3\,h_1\theta_v^2}{6h_1}\right)^2 - \frac{D_v'(J_x + \mu_{44})}{6\Delta h_1}}\ ,$$

where h_0 = initial metacentric height, in m;

θ_V = static heeling angle, rad: $\theta_v = \frac{M_W}{g\,\Delta_{h0}}$;

M_w = heeling moment, in k Nm, due to the design wind pressure determined according to 2.2.1;

Δ = craft's weight displacement at the loading condition in question, in tons;

D'_v= dispersion of angular velocities of rolling, in rad/s^2, determined by formula (2.2.2.1-b);

J_x = moment of inertia of craft's masses about the central longitudinal axis going through the craft's centre of gravity, in kg·m·s^2;

μ_{44}= moment of inertia of added water mass about the central longitudinal axis going through the craft's centre of gravity, in kg·m·s^2;

h_1 = coefficient computed by the formula:

$$h_1 = 4 * \frac{h^3}{27 * l_m^2} \ ;$$

l_m = maximum righting lever, in m.

b) The dispersion of angular velocities of rolling D'_v, in rad/s^2, is determined by formula

$$D'_v = [\frac{(G_1+G_2)}{W}]^{2/3} \ ,$$

Where G_1 = dimensionless factor of disturbing wave moment intensity to be determined by formula;

G_2 = dimensionless factor of disturbing wind moment intensity to be determined by formula;

W = roll damping coefficient defined in 2.2.2.1.f.

c) Determination of the dimensionless factor of disturbing wave moment intensity G_1 is done by the following formula:

$$G_1 = 0.00462 \frac{\overline{\omega^4}\ \omega_\theta^3\ \chi_\theta^2\ h_{3\%}^2}{\left(1+\frac{\mu_{44}}{J_x}\right)^2} \exp\left[-0.456\left(\frac{\bar{\omega}}{\omega_\theta}\right)^4\right], \text{(2.2.2.1.c)}$$

Where χ_θ = reduction factor defined in 2.2.2.1.e;

$h_{3\%}$ = wave height with 3% probability of exceeding level, in m, to be determined depending on the navigational area;

$\bar{\omega} = \frac{2\pi}{\bar{\tau}}$ Mean wave frequency, in 1/s;

$\bar{\tau}$ = mean wave period in question, in s, determined by Figure 2.6.3 and Table 2.6.4 in Section 6.

d) Determination of the dimensionless factor of disturbing wind moment intensity is done by the formula:

$$G_2 = \frac{0{,}3133 M_w^2}{(J_x + \mu_{44})^2 \omega_\theta^{5/3} . 10^6},$$

Where M_w = heeling moment due to design wind pressure, in kNm, determined according to 2.2.1.

e) With the help of the following equation, the reduction factor χ_θ is determined :

$$\chi_\theta = \exp(a_k \omega_\theta^2),$$

where a_k = parameter to be determined, depending on the vertical prismatic coefficient of the hull C_B, breadth B_H, draught d_H, transverse metacentric radius r, initial metacentric height h, by the formula:

$$a_k = 0{,}068 C_B^2 \sqrt{\frac{B_H d_H C_B r}{h}}$$; (2.2.2.1.e-ii)

ω_θ = craft's natural frequency of rolling, in s-1, computed for mono hulls by the formula:

$$\omega_\theta = \sqrt{\frac{\Delta h}{(J_x + \mu_{44})}}$$; (2.2.2.1.e-iii) for catamarans:

$$\omega_\theta = \sqrt{\frac{h}{i}}$$, (2.2.2.1.e-iv)

Where with the help of the formula 2.7.4.3-b, i is determined

f) With the help of the following formulae, the roll damping coefficient W is determined:

i. for craft with a smooth-lined hull:

$$W_s = \left(\frac{g}{\omega_\theta^2 h . \omega'_\theta}\right)^{\frac{1}{4}}$$, (2.2.2.1.6.1)

Where ω'_θ = coefficient to be determined by the nomographic charts in Figs. 2.6.5 and 2.6.6 of Section 6;

ii. for craft with a smooth-lined hull fitted with center or bilge keels:

$$W_k = W_s \frac{715 . \Sigma(S_k l_k^3)}{L_H B_H^4},$$ (2.2.2.1.f.ii)

Where S_k = area of a bilge or center keel, in m^2;

l_k = distance between the craft's centre of gravity and the centre of keel area, in m;

Σ = sum of design values computed for each keel if more than one is fitted, in m^5;

iii. for craft with hard-chine hull:

$$W_{HC} = W_s \frac{k.L_H B_H^4}{J_x + \mu_{44}}$$ (2.2.2.1.f.iii) or by the approximate formula:

$$W_{HC} = W_s \frac{0{,}09\ B_H}{\delta d_H}$$, (2.2.2.1.f.iii)

Where k = 0.003 – dimension factor, in t m-4 s^2;

δ = craft's block coefficient;

d_H = craft's draught, in m.

iv. The craft's mass moment of inertia J_x, in t·m·s^2, about the longitudinal axis going through the craft's centre of gravity is determined by the craft's mass load if the latter is divided into the large number of small items. The moment may be determined by one of the following empirical formulae, if the craft's detailed mass load is unavailable:

Pavlenko's formula

$$J_x = \frac{\Delta}{16g[B_H^2 + D_H^2]}$$

Shimanskii's formula

$$J_x = \frac{\Delta}{g[\frac{B_H^2 \alpha^2}{11}, 4\delta + D_H^2]};$$

Dwire's formula

$$J_x = \frac{\Delta}{12g[B_H^2 + 4\, z_g^2}$$

$$J_x = \frac{\Delta}{g\rho_{xx}^2}$$

Where ρ_{xx} = radius of inertia of the mass about the central longitudinal

Axis going through the craft's center of gravity which varies within the range $0.35 \leq \rho_{xx} / B_H \leq 0.45$ for craft of various types; in this case, the greater values correspond to hard-chine craft.

v. With the help of the following formula, the moment of inertia of added water mass μ_{44},in $t \cdot m \cdot s^2$, about the central longitudinal axis going through the craft's center of gravity is determined:

$$\mu_{44} = \frac{0,314}{\delta} \cdot \left(J_x \lambda_0^{'}\right),$$

Where δ = craft's block coefficient;

λ'_0 = quantity to be determined by the nomographic charts in Figs. 2.6.4, 2.6.5 and 2.6.6 of Appendix.

2.2.2.2. Calculation of amplitude of motions for non-sailing craft

a) The following formula determines the amplitude of motions, in degrees, for a round bilge craft having no bilge keels and bar keel:

$$\theta_{1r} = X_1 X_2 Y,$$

Where X_1 X_2 = dimensionless coefficients;

Y = multiplier, in deg.

The multiplier Y is taken from Table 2.2.3 depending on the craft's design category and the ratio $\sqrt{\frac{h_0}{B}}$

Table 2.2.3: Values of factor Y

Design category	$\sqrt{\frac{h_0}{B}}$									
	≤0.04	0.05	0.06	0.07	0.08	0.09	0.10	0.11	0.12	≥0.13
R, **R100** and **R200**	24.0	25.0	27.0	29.0	30.7	32.0	33.4	34.4	35.3	36.0
B, **R0**, **C_1** , **C_2** and **C_3**	16.0	17.0	19.7	22.8	25.4	27.6	29.2	30.5	31.4	32.0

Factor X_1 is taken from Table 2.2.4 depending on the ratio B/d.

Table 2.2.4

B/d	X_1	B/d	X_1
≤2.4	1.0	3.0	0.90
2.5	0.98	3.1	0.88
2.6	0.96	3.2	0.86
2.7	0.95	3.3	0.84
2.8	0.93	3.4	0.82
2.9	0.91	≥3.5	0.80

Factor X_2 is taken from Table 2.2.4 depending on the craft's block coefficient C_B.

Table 2.2.5: Values of factor X_2

C_B	≤0.45	0.5	0.55	0.6	0.65	≥0.7
X_2	0.75	0.82	0.89	0.95	0.97	1.0

b) The amplitude of motions, in degrees, is determined by the following formula, where the craft is fitted with bilge keels or a bar keel, or both

$$\theta_{2r} = k\,\theta_{1r}\,,$$

Where coefficient k is taken from Table 2.2.6 depending on the ratio A_k/(LB) wherein A_k = the total overall area of bilge keels, or the area of the side projection of the bar keel, or the sum of those areas, in m^2.

Table 2.2.6: Values for coefficient k

A_k/(LB)	0	1.0	1.5	2.0	2.5	3.0	3.5	≥4.0
K	1.00	0.98	0.95	0.88	0.79	0.74	0.72	0.70

c) It shall be assumed that the amplitude of motions for a hard-chine craft be equal to 70 per cent of the amplitude computed by formula.

d) The amplitude of motions for the craft that is fitted with stabilizers shall be determined without their functioning

e) The design values of the amplitude of motions should be rounded off to the whole degrees.

2.2.2.3. It shall be assumed that the design amplitude of rolling shall not be less than the values given below.

a) It shall be assumed that the design roll amplitude $\theta_{3\%}$, in degrees, for the sailing and non-sailing craft of design categories **R, R100, R200, B, C, C_1** and **C_2** be not less than the one determined by the formula:

$$\theta_{3\%} = k\,\theta_w$$

Where θ_W = design angle of wave slope – refer to Table 2.2.7;

$k_k = f(\bar{\tau}_0, \omega_0)$ –Coefficient allowing for the probability of the resonance of oscillations, while running beam to sea, is taken from Table 2.2.7;

$\bar{\omega} = \frac{2\pi}{\bar{\tau}}$ – mean wave frequency, s^{-1};

ω_θ = craft's natural frequency of rolling, in s^{-1}, computed by formula or (2.2.2.1.f.iv);

$\bar{\tau}$ = mean period of wave in question, in s, to be determined by the diagram in Fig. 2.6.4 of Section 6.

In calculations of the conditions the resonance condition for sailing craft is ignored and the amplitude of motions is assumed equal to the angle of wave slope θ_W when sails of the total area over 25 per cent of the maximum one are carried.

Table 2.2.7: Values for coefficient *k*

Design category	**θ_W deg**	**Frequency ratio: $\frac{\omega_0}{\bar{\omega}} = \frac{\tau\omega_0}{2\pi}$**							
		≤0.5	**0.75**	**0.87**	**1.0**	**1.25**	**1.5**	**2.0**	**≥2.5**
R, R100 or **R200**	25	1.0	1.4	1.8	2.0	1.8	1.5	1.2	1.1
B	20								
R0, C_1 and **C_2**	15								

b) Assumed roll angle for non-sailing craft of 6.0 m long and over according to ISO 12217-1:2002 shall be assumed at least:

For design categories **R, R100** or **R200**

$$\theta_{3\%} = 25 + \frac{20}{V_D};$$

For design category **B**:

$$\theta_{3\%} = 20 + \frac{20}{V_D},$$

Where V_D = craft's volume displacement, m^3.

2.2.3. The dynamic heeling moment due to breaking wave impact, in kNm, features the kinetic energy acquired by the craft after the wave impact and is determined by the formula:

$$M_V = \frac{1.27[A_V p_{br}(z_{cv} + a_1 a_2 d_A) t_{br}]^2}{J_x + \mu_{44}} . 10^{-2}$$

where A_v = maximum area, in m^2 , of the projection onto the center plane of the profile area of the craft's hull, superstructures and deckhouses impacted by the breaking part of the wave throughout a height h_{br} and along a length L_{br} given in Table 2.6.4,;

p_{br} = design pressure, in k Pa, of the largest breaking wave given in Table 2.6.4,;

t_{br} = action time, in s, of the largest breaking wave given in Table 2.6.4,;

z_{cv} = elevation of the center of area Av above the effective waterline plane, in m;

d_A = mean draught, in m, as the doubled distance from a design waterline to the parallel there to neutral axis of inertia of the area of the craft's center plane underwater part (ACL), allowed for hull keels excepting center boards/leeboards and appendages. It is allowed to assume d_A equal to a mid-length draught for the craft with a simply-shaped underwater area;

a_1 and a_2 = coefficients – refer to Tables 2.2.1 and 2.2.2;

J_x , μ_{44}= mass moments of inertia, in $t \cdot m \cdot s^2$ – refer to 2.2.2.1 and 2.2.2.1.h.

2.2.4. The increase of a static stability arm *Δ*/10, in m, is determined by the formula:

$$\Delta l_{10} = B_H(\sum_{m=1}^{14} A_m f_m - 0,= .01),$$

where $A_1 = \frac{L_H}{B_H} - 4{,}82$; $A_2 = \frac{L_H}{d_H} - 2{,}67$; $A_3 = \frac{D_H}{d_H} - 1{,}30$; $A_4 = \chi - 0{,}70$;

$A_5 = \delta - 0{,}692$; $A_6 = F_r - 0{,}28$; $A_7 = A_1^2$; $A_8 = A_2^2$; $A_9 = A_3^2$; $A_{10} = A_5^2$;

$A_{11} = A_6^2$; $A_{12} = A_2 \times A_3$; $A_{13} = A_2 \times A_4$; $A_{14} = A_1 \times A_6$;

$f_1 = -0,0020$; $f_2 = -0,0035$; $f_3 = 0,0170$; $f_4 = 0,0040$; $f_5 = 0,0192$;

$f_6 = 0,0260$ at $F_r < 0,28$ and $f_6 = -0,0274$ at $F_r < 0,28$; $f_7 = -0,00050$ and is taken into account only at $\frac{L_H}{B_H} < 4,82$; $f_8 = -0,00080$; $f_9 = 0,010$; $f_{10} = -0,0040$; $f_{11} = 0,0183$;

$f_{12} = -0,0050$; $f_{13} = -0,0244$;

$f_{14} = -0,0044$;

χ= vertical prismatic coefficient;

δ = block coefficient.

If the calculated value $\Delta\, l_{10} > 0$, then $\Delta\, l_{10} = 0$ shall be assumed.

2.3 Maximum Allowable Heeling Moment

2.3.1. The maximum allowable heeling moment M_{per} is determined from a righting lever curve with use of one of the stated methods depending on the criterion used for assessing the craft's stability. As the maximum permissible angle of heel θ_f due to the heeling moment, the least among the listed below is assumed:

For sailing craft: a down flooding angle θ_D and an angle of vanishing stability θ_V;

For non-sailing craft: a down flooding angle θ_D, an angle of vanishing stability θ_V and 50°.

In order to assess the weather criterion and the weather criterion considering breaking waves, M_{per} is determined from the righting lever curve allowing for the maximum permissible angle of heel θ_f and the roll amplitude θ_r. The maximum allowable heeling moment M_{per} is determined by plotting (Fig. 2.2.1) reasoning from the equality of areas ($S_2 = S_1$) on the righting lever curve. The moment M_{per} value, in k Nm, corresponds to the craft's displacement Δ, in k N, multiplied by the righting lever l_g , in m, being a segment OM on the righting lever curve.

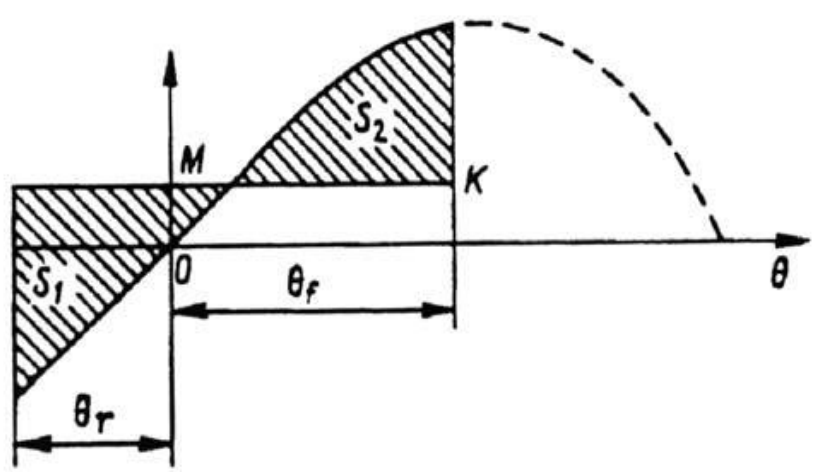

Fig. 2.2.1: Determination of maximum permissible moment M_{per}

2.3.2. In order to assess the wind stiffness criterion, determination of the maximum permissible heeling moment M_{per}, in k Nm, is done from the righting lever curve allowing for the maximum permissible angle of heel θ_f :

$M_{per} = \Delta\, l_{max}$ here l_{max} = maximum righting lever, in m, measured either at the maximum of the righting lever curve or at the angle θ_f , whichever is less.

2.4 Righting Lever Curve

2.4.1. The righting lever curve of mono hulls shall meet the following requirements:

2.4.1.1. At a heeling angle of $\theta_m \geq 30°$, the maximum righting lever l_{max} shall not be less than 0.25 m. as per the agreement with the Register, the angle corresponding to the maximum of the righting lever curve may be reduced down to 25°. Given two maxima of the righting lever curve due to the effect of superstructures or deckhouses, the first one from the upright position shall correspond to the heel of at least 25°. For the craft of design categories **R, R100, R200** and **B,** at an angle of not less than 60° the positive static stability (an angle of vanishing stability) shall terminate. The area under the righting lever curve shall not be less than 0.055 m· rad up to the heeling angle of 30° and at least 0.09 m· rad up to the heeling angle of 40°. The area between the heeling angles of 30° and 40° shall not be less than 0.03 m· rad.

2.4.1.2. The requirements that are listed in this chapter, allowing for corrections for the free surface effect according to Section 1, [1.3.9] when plotting righting lever curves, shall be met by the craft.

2.4.1.3. The requirements of this chapter which are not met by the craft, for an angle of vanishing stability due to the curve terminating at a down flooding angle, may be allowed to operate as the craft of design categories **R0, C_1** or **C_2** depending on the wind pressure the craft withstands being verified for the weather criterion. Nevertheless, it is essential therewith that a conditional angle of vanishing stability, determined under the assumption that the closing appliances of openings associated with down flooding are weather tight, not be less than the one required in this Chapter.

2.4.1.4. It is permitted for the craft having a ratio $\frac{B}{D} > 2$ to operate at the reduced angle of vanishing stability and at the angle corresponding to the maximum righting lever as compared with those required in 2.4.1:

a. For the angle of vanishing stability: by a value $\Delta\theta_V$ determined by formula $\theta_v = 40° \left(\frac{B}{D} - 2\right) \cdot (K - 1)$, depending on the ratio B/D and the stability criterion K.

Where $B/D > 5$ and $K > 1.5$, to be assumed are $B/D = 2.5$ and $K = 1.5$.

The value of $\Delta\theta_V$ shall be rounded off to the nearest integer;

b. For the angle corresponding to the maximum righting lever: by a value equal to half the decrease of the angle of vanishing stability.

2.4.1.5. For the craft which is considered as sailing craft, the angle of vanishing stability shall be not less than:

a. For the craft of design categories **R, R100** and **R200** having a displacement

$\Delta_{max} > 3000\,kg$: $\theta_v = (130 - 0.002\,\Delta_{max})$, degrees , but at least 100°;

b. For the craft of design category B having a displacement $\Delta_{max} > 1500$kg: $\theta_v = (130 - 0.005\,\Delta_{max})$ degrees, but at least 95°;

c. For the craft of design categories **R0, C_1** or **C_2** irrespective of a displacement: $\theta_v \geq 90°$;

d. For the craft of design categories **C_3** or **D** irrespective of a displacement:

$\theta_V \geq 75°$;

e. Where the hull structure includes flotation elements of the total volume of not less than Δ_{max} / 850, m^3, the angle of vanishing stability may be:

$\theta_V \geq 95°$for the craft of design categories **R0, R100** and **R200**;

$\theta_V \geq 75°$ for the craft of design categories **R0, C_1** or **C_2.**

2.4.1.6. For the craft which is considered as non-sailing craft, the following requirements shall be met:

a. maximum righting moment M_{30} , in k Nm, at a heeling angle of $\theta_m \geq 30°$ shall be:

$M_{30} \geq 25$ for the craft of design categories **R, R100** and **R200**;

$M_{30} \geq 7$ for the craft of design category **B**

In this case, the righting lever at the heeling angle of 30° shall be $l_{30} \geq 0.2$ m for all the craft.

b. maximum righting moment M_{30}, in k Nm, at the heeling angle of $\theta_m \leq 30°$ shall be:

$M_{30} \geq 750/\theta_m$ for the craft of design categories **R, R100** and **R200**

$M_{30} \geq 210/\theta_m$ for the craft of design category **B**;

In this case, the righting lever at the heeling angle θ_m shall be $l_{\theta m} \geq 6/\theta_m$, in m, for all the craft.

Note. θ_m = heeling angle, in degrees, at which the righting lever is at its maximum provided that this corresponds to the part of the righting lever curve plotted to a down flooding angle.

2.5 Metacentric Height

2.5.1. At all loading conditions, the corrected initial transverse metacentric height h of all craft, excepting the "light craft", shall not be less than 0.5 m. At the loading condition corresponding to the minimum operational load, but with no crew on board, the initial transverse metacentric height h of the motor craft having a length $L_H \geq 6$ m, shall be not less than 0.5 m.

2.5.2. The initial transverse metacentric height h of fully-loaded non-sailing craft at the worst, regarding stability, crew accommodation shall be not less than a value of h(R) to be determined by the formula:

$$h_R = \frac{M_c}{[\Delta\, g \sin\theta_{0(R)}]}\,,$$

Where M_C = heeling moment due to the people displacement to the side, in k Nm;

$\theta_{0(R)}$ = permissible heeling angle of the craft at the people displacement to one side, in degrees, to be determined according to 2.5.2.2;

Δ = craft's mass in the corresponding loading condition, t; g = gravitational acceleration, 9.81 m/s^2.

2.5.2.1. Determination of Heeling moment M_C, in kNm, is done according to the design scheme of people crowding to one side which corresponds to the most hazardous potential accommodation under the normal conditions of the craft's operation. Crowding of people to one side is assumed in the areas which are free from any equipment and arrangements considering the restricted admittance of passengers to one or another part of a deck. The areas of cockpits and decks whereon may be accommodated people, while the craft is underway, including the areas whereon people may stand, sit, walk or lie may be included in the areas which are under consideration. The areas used in steering the craft, for access to compartments, for recreation and setting sails shall be included in the areas under consideration. The areas which are under consideration do not comprise: windscreens, a wheelhouse roof unless the presence of people is provided thereon, deck sections inclined over 15° to the horizon and deck sections of under 100 mm wide. It is acceptable for the craft of a length $L_H \leq 4.8$ m to ignore standing people in calculations if such situation

is not specified under the craft's operational conditions. In calculating the heeling moment, the density of people accommodation is assumed:

In the craft engaged on voyages extended over 24 hours: 4 persons per 1 m^2 of free area;

In the craft engaged on voyages extended under 24 hours: 6 persons per 1 m^2 of free deck area.

The areas of passageways on open decks that is located near the bulwark or guard rail are assumed with a factor of 0.75 at a width of 0.7 m to 1.0 m and with a factor of 0.5 at a width of 0.7 m and less.

It is assumed that the areas of passageways between settees (benches, armchairs), where passengers may crowd in addition to those occupying their seats, are to be with a factor of 0.5. It is assumed that the mass of a person is equal to 75 kg and a center of gravity for a standing person is assumed at a height of 1.1 m above the deck, for a sitting one, at a height of 0.3 m above the seat.

2.5.2.2. For the craft having a length of 24 m and less, with the help of the following formula, the permissible heeling angle $\theta_{0(R)}$ of the craft, in degrees, with the potential and actual displacement of people to one side at the most unfavorable loading condition is determined:

$$\theta_{0(R)} = 10 + \frac{(24 - L_H)^3}{600}.$$

2.6 Requirements for Down flooding Angles

2.6.1. The heeling angle for the craft of a length $L_H \geq 6$ m, which results in craft's flooding over side, across the coaming or through sea openings with their total area over 50 LH^2, in mm^2, shall not be less than the values given in Table 2.6.1.

Table 2.2.8: Requirements for down flooding angles of craft having $L_H \geq 6$ m

Design category	Down flooding angle θ_D (determined as the greatest of values)	
Non-sailing craft (refer to 2.6.2)		
R, R100 and **R200**	θ_0 + 25°	40^0
B	θ_0 + 15°	
R0, C_1, C_2 and **C_3**	θ_0 + 5°	

D	θ_0	-
Sailing craft (refer to 2.6.3)		
R, R100 and **R200** and **B**	40^0	
R0, C_1, C_2 and **C_3**	40^0	
D	40^0	
$\theta_0 = \theta_{0(R)}$, being determined as per 2.5.2.2		

2.6.2. Instead of the down flooding angle criterion for the non-sailing craft of a length $L_H \geq 6$ m, alternatively, the freeboard criterion for an inclined position with the people displacement as per 2.5 may be used. The freeboard in the inclined position being determined as a vertical distance from the water surface to the lower edge of the craft's side, coaming /openings across/through which water may penetrate the craft shall be not less than the values given in Table 2.6.4.

Table 2.2.9: Minimum freeboard of inclined craft

Design category	**$L_H \geq 6$ m**	**$L_H < 6$ m**		
		Craft of type C and E		**Craft of type A, B and D**
		Craft of which buoyancy ensured with flotation elements only	**Other craft**	
R0, C_1, C_2 and C_3	$0{,}11\sqrt{L_H}$, m	150 mm	–	100 mm
D	$0{,}07\sqrt{L_H}$, m	10 mm	250 mm	10 mm

2.6.3. The requirements of Table 2.6.1 are not compulsory for the sailing craft of design categories **R0**, **C_1**, **C_2**, **C_3** or **D** of which buoyancy is ensured with flotation elements only or which may be righted from a capsized position by the actions of the crew.

2.6.4. For the sailing craft of a length $L_H < 6$ m, to be normalized is the freeboard in the inclined position with the people displacement as per 2.6 instead of the down flooding angle. The freeboard values of the inclined craft shall be not less than those given in Table 2.6.4.

2.6.5. The termination of a righting lever curve at the down flooding angle as per 2.4.3 with heeling angles below 40° is not permitted.

2.7 Additional Requirements for Stability

2.7.1. Pleasure craft

2.7.1.1. The requirements of 2.1 shall be met by the pleasure craft's stability. Verification of the stability for compliance with the requirements of 2.7.1.3 and 2.7.1.4 shall also be done for the loading conditions specified in 2.7.1.2.a and 2.7.1.2.b.

2.7.1.2. Verification of the stability of pleasure craft for the criteria given in 2.1.4 to 2.1.7 shall be done at the craft's following loading conditions:

a. fully loaded – with full load, crew, luggage and full stores;

b. Minimal operational loading. If such loading condition is supposedly less favorable than the above listed, then the Register may also demand verifying the craft's stability at the partial number of passengers. Verifying the craft's stability for basic criteria, assumptions are made for all passengers to be at their standard places, the load is stowed in compliance with the normal operational conditions of the given craft and the crew is at their work stations in steering the craft.

2.7.1.3. Verification of the stability of pleasure craft for the loading conditions specified in 2.7.1.2.a and 2.7.1.2.b shall be done in case of the joint action of heeling moments due to wind pressure onto a weather side and the maximum potential crowding of people at a lee-side.

Determination of the heeling angle of the craft at the feasible displacement of people to one side is done for accommodating the standing people, assuming 6 persons per 1 m^2 of open deck with a mass of one person equal to 75 kg.

2.7.1.4. Verification of the stability of pleasure craft for the loading conditions specified in 2.7.1.2.a and 2.7.1.2.b shall be done in case of the joint action of the maximum potential crowding of people at one side and the determination of the heeling moment being done according to 2.7.1.5 which arises in the evolutionary period of turning.

2.7.1.5. In the verification of the stability for compliance with the requirements of 2.7.1.3 and 2.7.1.4, the permissible heeling angle of craft $\theta_{0(R)}$, in degrees, at the feasible displacement of people to one side at the most unfavorable loading condition of the craft shall not exceed that which is specified in 2.5.2.2.

2.7.2. Water bowers

2.7.2.1. The bower's deck shall not be immersed while verifying the stability of water bower at the crowding of passengers to one side, according to 2.7.1.3. It shall be assumed for the permissible angle of heel to be equal to not greater than 0.8 the down angle flooding, where a heeling angle is limited with a down flooding angle. In all cases, due to crowding of passengers, the heeling angle shall not exceed 12°.

2.7.2.2. At the angle of the θ_M maximum, the righting lever l_M shall be not less than $6/\theta_M$ and 0.2 m.

2.7.2.3. Verifying the berth-connected craft's stability, it is suggested to also consider actual wind loads for the berth areas specified which are to be assumed relying on the data of local hydro meteorological stations.

2.7.3. Multihull craft

2.7.3.1. The deck of any craft's hull shall not be immersed, while verifying the multihull craft's stability at the crowding of passengers to one side under conditions of 2.7.1.3 to 2.7.1.4. The bilge of any catamaran's hull shall not come out of water in this case, and as for a trimaran, only one hull may rise off the water. The righting lever l_M at the angle of the θ_M maximum shall be not less than $6/\theta_M$ and at least 0.2 m.

2.7.4. Catamarans

2.7.4.1. Application of these requirements are done to the catamarans of design categories **C, C_1 , C_2** and **C_3** provided that the catamaran's maximum permissible angle of heel at a coextensive inclination does not exceed the angle when the waterline plane touches the bilge of the hull, which comes out of water, at the mid length section.

2.7.4.2. With the help of the following formula, the reduced heeling lever, in m, for catamarans at the dynamic wind action on the craft is determined.

$$z = z_W - 0.5\,d \quad (2.7.4.2)$$

Where z_W = elevation of the windage centre above the craft's base plane, in m;

d = mean draught at the effective waterline, in m.

2.7.4.3. With the help of the formula given below, the design roll amplitude, in degrees, for the corresponding class catamarans shall be assumed according to Table 2.2.10 depending on the values of q_B and V/2L (B, L and V = breadth, length and displacement volume of the catamaran, respectively), a multiplier q, in s^{-2}, therewith

$$q = \frac{z_m - z_g}{i}$$

Where z_m = ordinate of a transverse metacenter in m;

z_g = ordinate of the catamaran's center of gravity, in m;

i = relative moment of inertia of mass including for the added mass of liquid, m·s^2;

$$i = z_g^2\left[\frac{5{,}79\frac{B_k^2}{z_g^2(\bar{c}+0{,}61)^2+1}}{3g}\right],$$

Where $\bar{c} = \frac{C}{2B_k}$ – relative horizontal clearanceof the catamaran's hulls;

C = distance between the inner sides of hulls at the midsection at the level of the effective waterline, in m;

B_k = breadth of the catamaran's hull at the midsection at the level of the effective waterline, in m;

g = gravitational acceleration, in m/s^2.

A value of z_m shall be determined according to 2.7.4.4.

Table 2.2.10

Design category	Argument q_B, m·s²	Design roll amplitude θ_m, in degrees, at values of V/2L, in m²									
		< 1.0	2.0	3.0	4.0	5.0	6.0	7.0	8.0	9.0	> 10
R0 and **C_1**	< 10	11.3	9.9	8.3	6.8	6.0	5.7	5.5	5.3	5.2	5.1
	20	12.0	10.5	8.9	7.4	6.6	6.2	6.0	5.9	5.7	5.6
	30	13.2	11.9	10.3	8.7	7.8	7.5	7.3	7.1	7.0	6.0
	40	14.8	13.9	12.3	10.6	9.6	9.3	9.1	9.0	8.8	8.7
	> 50	16.5	15.5	13.9	12.2	11.3	10.8	10.6	10.5	10.3	10.2
C_2 and **C_3**	< 10	6.6	5.7	4.5	3.7	3.1	2.7	2.5	2.4	2.3	2.2
	20	7.5	6.5	5.3	4.3	3.6	3.2	2.9	2.7	2.6	2.5
	30	8.9	8.2	6.8	5.7	4.8	4.2	3.7	3.5	3.4	3.3
	40	10.7	10.0	8.6	7.2	6.1	5.3	4.7	4.4	4.2	4.1
	> 50	12.4	11.1	9.6	8.1	6.9	5.9	5.3	5.0	4.8	4.7

2.7.4.4. With the help of the formula given below, the ordinate of the catamaran's transverse metacentre is determined:

$$z_m = \alpha B_k b \left[\frac{\alpha}{11}, 4 + (\bar{c} + 0.5)^2 + \frac{\delta}{b^2(\alpha+\delta)}\right] / \delta$$

Where α = effective waterline area coefficient for the catamaran's hull;

b = ratio of the hull breadth B_k to the draught d of the catamaran;

δ = block coefficient of the catamaran's hulls.

2.7.4.5. With the help of the following formula, the dynamic heeling moment, in kNm, applied to the catamaran in the evolutionary period of turning is determined:

$M_R = 0{,}03 v_0^2 \Delta (z_g - 0{,}5d)/gL,$

Where v_0^2 = catamaran's speed before the turning assumed equal to the full speed on a straight course, in m/s;

Δ = catamaran's weight at the draught at the effective waterline, k N;

z_g = elevation of the catamaran's centre of gravity above the base plane, in m;

L and d = catamaran's length and mean draught at the effective waterline, respectively, in m

2.7.5. Dynamically supported craft

Application of these requirements are done to powered planning and semiplaning craft moving in the $F_r > 1$ mode.

2.7.5.1. The stability of dynamically supported craft is determined, with the help of an experiment-calculated approach. Calculations, the results of testing the similar prototype craft or such their combination, which is reasonable for the specific craft, may be used to prove that the requirements providing for the performance of experimental investigations are met. The Register shall be in approval with such evidence.

2.7.5.2. For the corresponding purpose, for the powered craft, the general requirements of 2.1 shall be met by the specified craft in a displacement mode.

2.7.5.3. Under all loading conditions specified in Section 1,[1.3.7.1] and 2.7.1.2 in two modes, the stability of dynamically supported craft shall be checked:

a. In displacement mode;

b. Under operational conditions. According to an inclining test, stability characteristics shall finally be refined for the displacement mode, and under the operational conditions, relying on the data of full scale trials at the most unfavorable operational conditions being carried out in the course of the craft's acceptance trials. The Register shall specially consider the test programme, report, as well as the Information on Stability compiled on the basis of calculations and experiments.

Note. According to the results of calculations or model tests, the experimental verification of stability in the full-size craft is allowed to carry out only for the worst, regarding stability, loading condition which shall be

revealed. With the use of the experimental heeling angle dependence of a heeling moment, craft's speed and an angle of rudder, the values of the maximum permissible angles of heel shall be refined.

c. The Information on Stability shall contain the recommendations on reducing speed in turning and in the seas.

2.7.6. Fast displacement craft

2.7.6.1. Verification of the stability of fast displacement craft ($0.5 \leq Fr_{\Delta} \leq 1.5$) shall be done in testing the type craft. The verification of stability shall be carried out in turning in calm water with the sequential stepwise increase of an angle of rudder, including giving full rudder opposite to the crowd of passengers and with the sequential stepwise increase of the engines speed up to the greatest one.

2.7.6.2. In testing the pleasure craft, the specially taken in and secured solid ballast shall be used so as to ensure the corresponding displacement, position of center of gravity and initial heeling angle due to passengers crowding to one side.

2.7.6.3. In testing, it should be entered in a report: displacement; forward and aft draught; engine speed and craft's corresponding speed

Depth of water area;

Weather conditions;

Initial heeling angles;

Heeling angles for each test mode;

Angles of rudder;

Level of water surface at the craft's side in heeling

2.7.6.4. While testing, the heeling angles that are obtained shall be compared with the corresponding permissible angles of heel by considering the additional requirements for the various types of craft.

2.7.6.5. The entry of the pertinent restrictions on the combination of the main engine speed and the angles of rudder obtained in tests should be done in the Information on Stability.

2.7.6.6. The Register shall approve the test programme, the report, as well as the Information on Stability of the craft compiled on the basis of calculations and tests.

2.7.7. Sailing craft

2.7.7.1. General requirements for stability. As specified according to Section 5,[5.7], the stability of sailing craft shall be determined for all the options of the sails carried, Part

III "Equipment, Arrangements and Outfit" of these Rules, and the requirements of 2.1 of this Part of the Rules shall be met.

2.7.7.2. Wind stiffness of sailing craft of design categories **C_3** and **D**. The wind stiffness test of the craft is carried out according to the method given in ISO 12217-2:2002 for the craft of a length $L_H \geq 6$ m to be constructed for compliance with the requirements of EC Directive No.94/25/EC.

a) With the added weight of 75 kg placed at the centerline within reach of the helm, the test is carried out with the craft in the light condition. Sails shall be stowed ready for hoisting. Unless they can be purposely fixed in the lowered position while underway, centerboards and sliding keels shall be raised.

b) The calculated wind velocity v_C needed to produce a heeling angle

$\theta_T = 45°$ is determined by the formula:

$$v_c = \sqrt{\frac{13\,hT + 390\,B_H}{A'_s(h_{CE} + h_{LP})\,(\cos\theta_t)^{1,3}}},$$

where A'_s= the actual profile projected area of the standard sail plan, in sq.m;

h_{CE} = height of the geometrical center of A'_sA'S above the waterline, in m;

h_{LP} = height of the waterline above the geometrical center of lateral profile area of the immersed hull and keel/centerboard and rudder, when upright, in m. In calculations, if a down flooding angle $\theta_D < 45°$, it is assumed

$\theta_T = \theta_D$.

c) If the calculated value of v_C is not less than $v_{C(R)}$ given in Table 2.2.11, the craft is considered to be fully complying with the wind resistance criterion.

d) The craft may be permitted to operate on condition that the requirements on re reducing the sail area A'S will be entered in the Information on Stability, if the calculated wind velocity is less than required according to Table 2.2.11.

Table 2.2.11: Required wind velocity $v_{C(R)}$, m/s

Design category	C_3	D
Craft other than those below	13	8
Craft of which buoyancy is ensured with flotation elements only	11	6

2.7.7.3. Stability of sailing multihull craft.

a. Verification of the stability of the sailing multihull craft is to be done according to the method given in ISO 12217-2:2002 for the craft to be constructed for compliance with the requirements of EC Directive No.94/25/EC.

i. If the multihull craft's length $L_H > 5B_{CB}$, the craft shall meet the requirements for mono hulls.

ii. The size factor F of the multihull craft having length $L_H \geq 6$ m is determined by the formula:

$$F = 1{,}75 m_{MOC}\sqrt{L_H B_H}\ .$$

iii. To provide protection against being inverted by breaking waves, the multihull size factor shall exceed the required values given in Table 2.2.12.

Table 2.2.12: Required multihull size factor for craft having $L_H \geq 6$

Design category by EC Directive No.94/25/EC	Required multihull size factor		
	L/B < 2,	**2.2 ≤ L/B ≤ 3.2**	**2 L/B > 3.2**
A	$193600/(L/B)^2$	40000	$313600/(6 – L/B)^2$
B	$72600/(L/B)^2$	15000	$117600/(6 – L/B)^2$
C	Not applicable		

Note. For catamarans: $L/B = L_H/B_{CB}$; for trimarans: $L/B = 2\ L_H/B_{CB}$.

iv. Alternatively, where the capsized craft may be returned to the upright position by the actions of the crew, application of the requirements in 2.7.9.3.a.ii and 2.7.9.3.a.iii are not done.

v. Provision of the recommendations on carrying sails, the data on hazardous heeling angles and the ways to be used to recover the capsized multihull shall be done in the Information on Stability.

vi. Where inhabited spaces are available inside the hulls, catamarans shall be provided with hatches for access into the hulls and for coming out in case of capsizing. The requirements cover the craft

constructed in 2001 and later on. The hatch of a capsized catamaran shall rise above the water surface.

2.7.7.4. Stability index.

a. According to the method given in ISO 12217-2:2002 for the craft to be constructed for compliance with the requirements of EC Directive No.94/25/EC, the verification of the sailing craft for the stability index is carried out and with giving the design category to the craft in compliance with that Directive and ISO standards.

i. Depending on the navigational area, the stability index **STIX** shall be not less than the values given in Table 2.7.9.4.a.i.

Table 2.2.13: Requirements for index STIX

Design category according to ISO 12217	**A**	**B**	**C**	**D**
STIX ≥	32	23	14	5

The index **STIX** is used for the overall assessment of dependability of the sailing monohull craft having a length of LH ≥ 6 m. If factors **FDS, FIR, FKR**, etc., which make up the index **STIX** and are obtained by calculations, fall outside of the permissible limits, their values shall be taken equal to the top and bottom limits of the given factor respectively.

The index is determined by the formula:

$$STIX = (7 + 2,25\,LBS)(FDS \times FIR \times FKR \times FDL \times FBD \times \times FWM \times FDF)0,5 + \delta\,,$$

Where δ = 5 if the craft has flotation elements and also has l90 > 0° when the craft is fully flooded with water. Otherwise, δ = 0 is assumed.

ii. The dynamic stability factor FDS with the limiting values of 0,5 ≤ FDS ≤ 1,5 is determined by the formula:

$$\mathrm{FDS} = \mathrm{A_l}/15.81\sqrt{\mathrm{L_H}},$$

Where A_l = positive area under the righting lever curve, m· deg.

iii. The inversion recovery factor **FIR** with the limiting values of 0.4 ≤ **FIR** ≤ 1.5 is determined by the formula:

$FIR = \frac{\theta_v}{125 - \frac{m}{1600}}$ if m < 40000 kg;

$FIR = \frac{\theta_V}{100}$ if m ≥ 40000 kg,

Where m = mass of the craft in the appropriate loading condition, in kg.

iv. The knockdown recovery factor FKR with the limiting values of 0.5 ≤ FKR ≤ 1.5 is determined by the formula:

$FKR = 0.875 + 0.0833\, F_R$ if $F_R \geq 1.5$;

$FKR = 0.5 + 0.333\, F_R$ if $F_R < 1.5$;

FKR = 0.5 if $\theta_V < 90°$,

where $F_R = \frac{l_{90} m}{2 * A'_S * h_{CE}}$;

l_{90} = righting lever at θ = 90°, in m;

h_{sc} = height of the craft's windage centre above the waterline, in m.

v. The displacement-length factor **FDL** with the limiting values of 0.75 ≤ **FDL**≤ 1.25 is determined by //the formula:

$FDL = \sqrt{0.6 + 15 m F_L / L_{BS}^3 (333 - 8 L_{Bs})}$,

Where $L_{BS} = \frac{2\, L_{WL} + L_H}{3}$, m; $F_L = \left(\frac{L_{BS}}{11}\right)^{0.2}$.

vi. The beam-displacement factor **FBD** with the limiting values of 0.75 ≤ **FBD** ≤ 1,25 is determined by the formula:

$FBD = \sqrt{13{,}31 B_{wL} / (B_H - F_B^3)}$; if $F_b > 2.20$; ;

$FBD = 1.118 \sqrt{B_{wL} / (B_H)}$ if F_B = 1.45….2.20;

$FBD = \sqrt{B_{wL} F_B^2 / (1.682\, B_H)}$ if $F_B < 1.45$; ,

where $F_B = 3.3\, B_H \sqrt[3]{0.03m}$ m

vii. The wind moment factor **FWM** with the limiting values of 0.5 ≤ **FWM** ≤ 1.0 is determined by the formula:

FWM = 1 if $\theta_D \geq 90°$;

$FWM = \frac{v_{AW}}{17}$ if $\theta_D < 90°$;

$v_{AW} = \sqrt{13 \frac{m l_D}{A_S'(h_{CE}+h_{LP})} . |\cos\theta_D|^{1,3}}$,

where v_{AW} = wind velocity, in m/s;

l_D = righting lever at $\theta = \theta_D$, in m;

h_{LP} = height of the waterline above the centre of lateral resistance with centerboards, keels and rudders in the lowered position, in m.

viii. The down flooding factor **FDF** with the limiting values of 0.5 ≤ **FDF** ≤ 1.25 is determined by the formula:

$FDF = \frac{\theta_D}{90}$.

2.7.8. Verification of stability of craft with reserve of buoyancy provided by flotation elements

2.7.8.1. When the verification of the reserve of buoyancy is done, the loading condition of the non-sailing craft shall include at least 25 per cent of stores and outfit being part of the full load. Assumption this loading shall be done at the level of the accommodation deck (or cockpit) on the centerline amidships.

2.7.8.2. Verification of the reserve of buoyancy of sailing craft is done in the full load condition.

2.7.8.3. According to Table 2.7.10.3 the number of air chambers open to atmosphere during testing shall be assumed, where the craft's reserve of buoyancy is provided by air space.

Table 2.2.14: Number of air chambers to be opened

Total number of air spaces	Number to be opened
< 4	Single largest
4 ... 8	Two largest
> 8	Three largest

2.7.8.4. After complete flooding the craft with water, it shall remain afloat with an additional load (refer to Table 2.7.10.4) applied to the inner surface of the craft's bottom or to the location where people is usually accommodated.

Table 2.2.15: Loading for verification of reserve of buoyancy

Design category	**R, R100 , R200 and B**	**R0, C_1 , C_2 and C_3**	**D**
Loading, kg	4 m_{MTL} / 3	60 + 15 n	50 + 10 n
Note : m_{MTL} = maximum loading (deadweight) of craft; n = number of people allowed on board			

2.7.8.5. The craft shall remain afloat with the requirements in 2.7.10.3 met having the heel and trim within 12° and, therewith, at least 2/3 of its sheer line (or gunwale) above water.

2.7.8.6. Under the conditions of 2.7.10.3, the positive buoyancy for the craft of a length L_H < 4.8 m fitted with buoyancy blocks shall be ensured with an additional load of 75 kg on the craft's bottom.

2.7.8.7. Fitting of the mono hull sailing craft shall be done with the flotation elements of the total volume equal to at least the displacement volume of the fully loaded craft.

2.7.8.8. Their total volume shall be at least 120 per cent of the displacement volume of the fully loaded craft where the reserve of buoyancy of the multihull sailing craft is provided with flotation elements.

2.7.8.9. The fully flooded craft shall not capsize at the heeling loading of 6n (n = number of people allowed on board), in kg, applied to its hull side, but not less than 15 kg. The points to apply the heeling loading shall be assumed at the hull side alternately at a distance of L_H / 3 from the bow and stern. The points of applying the heeling loading shall correspond to those boundaries where the forward and aft boundaries of a cockpit are closer to the middle.

2.7.8.10. Verification of the flooded craft stability shall be done by alternate applying all the loading to the forward and aft points on the starboard and port sides. In this case, the craft's heel shall not exceed 45°.

a) The craft flooded with water, fully out fitted and loaded to simulate the weight of engines, batteries, etc. and with the permanent equipment according to Figs. 2.2.2 and 2.2.3 shall be tested by applying the heeling loading P_H , in kg, determined by formula

$$P_H = (10 + 5N) \geq 25 \ ,$$

Where N = total number of people allowed for accommodation on board craft

b) The application of the points that is done to the heeling loading shall be assumed at the hull side alternately at a distance of L_H / 3 from the bow and stern. The points of applying the heeling loading shall correspond to those boundaries where the forward and aft boundaries of a cockpit are closer to the middle.

Verification of the stability of the craft flooded with water should be done by alternate applying all the loading to the forward and aft points on the starboard and port sides. The craft's heel in this case shall not exceed 45°.

c) As far as practicable, the masses (of cargoes) which simulate the weight of the engine and equipment shall be located, at the regular places thereof.

d) Flotation elements shall be located so that the powered craft has positive stability at an inclination of 60° as well.

e) The sailing craft shall not invert and after being knocked down shall remain afloat with its masthead (no sails) touching the water surface.

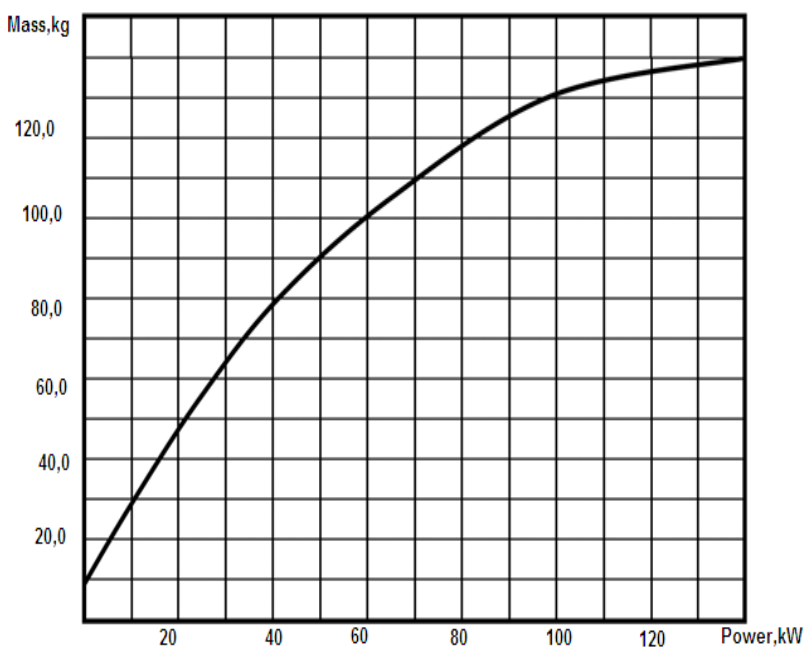

Figure 2.2.2: Mass of outboard petrol engine against power

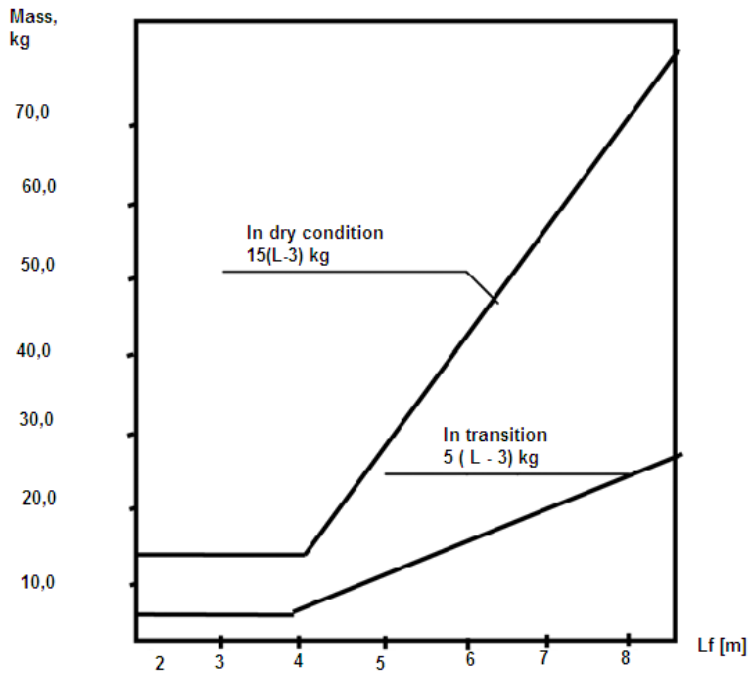

Figure 2.2.3: Total mass of anchor, anchor rope, mooring equipment, oars, fire extinguisher, etc. against the craft's full length. The mass, in kg, should be rounded up to the nearest whole number divisible by 5.

SECTION 3 RESERVE OF BUOYANCY

Contents

3.1. General

3.1.1. Depending on the craft's class, the reserve of buoyancy of small pleasure craft shall be provided.

3.1.1.1. With any one watertight compartment flooded the craft's defined margin line does not immerse such shall be the reserve of buoyancy for the craft of design categories **R**, **R100**, **R200** and **B** and the requirements in 3.1.3.1 are met.

3.1.1.2. When any one compartment is flooded, the reserve of buoyancy for the craft of design categories **R0**, $\mathbf{C_1}$, $\mathbf{C_2}$, $\mathbf{C_3}$ and **D** shall provide positive buoyancy, and shall compliance with the requirements of 3.1.3.2.

3.1.1.3. If in approval with the Register, the craft of design category **D** may dispense with the reserve of buoyancy where the craft is provided with personal life-saving appliances for every person on board.

3.1.1.4. In the Owner's Manual, the craft's reserve of buoyancy shall be specified and the Information on Stability.

3.1.2. With the help of one of the following ways, the damaged craft's reserve of buoyancy may be provided:

3.1.2.1. Dividing the hull in watertight compartments;

3.1.2.2. Fitting flotation elements in the craft's hull, superstructures and deckhouses including soft elements filled with foamed polymers or air at an excessive (above atmospheric) pressure of 10 kpa;

3.1.2.3. Applying soft flotation elements inflated at the craft's damage and securely fitted inside or outside the craft's hull;

3.1.2.4. Any combination of the above ways. The Register shall approve the material and structure of the flotation elements used, including their anchoring to the craft, and systems for filling soft elements.

3.1.3. The damaged craft's stability shall meet the following requirements:

3.1.3.1. In the final stage of flooding, a transverse metacentric height for the craft of design categories **R**, **R100**, **R200** and **B** in the upright position shall not be less than 0.05 m in all loading conditions;

3.1.3.2. In the final stage of flooding for the craft of design **R0**, $\mathbf{C_1}$, $\mathbf{C_2}$, $\mathbf{C_3}$ and **D,** the damage stability of the craft, which meets the requirements for the reserve of buoyancy, shall abide by with the requirements in 2.7.10.

3.1.4. The margin line for the type *A*, *B* and *D* craft is the waterline at which: the freeboard deck does not immerse; a distance from the lower edge of openings, which have no closing appliances of

at least the tightness Degree 2, to the damage waterline is not less than the value of the freeboard assigned to the craft. The type *C* and *E* craft qualify as the craft which shall meet only the requirements for the level of the reserve of buoyancy.

3.1.5. In each case, the Register shall specially consider the requirements for the righting lever curve of the damaged craft.

3.2. Subdivision

3.2.1. The structural arrangements associated with subdivision shall meet the requirements for the structures strength and tightness set forth in Chapter 3, Chapter 4 and Chapter 5. Machinery. Systems and Piping" of these Rules.

3.2.2. Compartments which have a length equal to at least 10 per cent of the craft's length, only those are considered watertight, but not less than 2 m, excepting the forepeak and after peak.

3.2.3. Where the length of the compartment adjacent to the collision bulkhead is less than 10 per cent of the craft's length or less than 2 m, the forepeak and this compartment in calculating the damage trim and stability are considered as being simultaneously flooded, but their total length shall not be less than specified in 3.2.2.

3.2.4. All transverse subdivision bulkheads shall be watertight and be brought to the upper deck or bulkhead deck. Additionally with the help of watertight bulkheads, crew's accommodations and passenger spaces shall be separated from the engine room and cargo holds. Given the engine room in the craft, it shall be separated with the help of watertight bulkheads from other spaces.

3.2.5. Provided that all parts of the latter are at a distance of more than 1/5 of the craft's breadth from the outer shell, but at least 0.5 m, the transverse bulkhead may have a step (recess). The compartment length is determined as a distance till the nearest recess of this bulkhead, if this requirement is not met. Pipelines with open holes and vent ducts shall be laid so that in case of leakage other spaces or reservoirs are safe from flooding. In this regard, it shall be assumed that the safety is provided if the pipelines or vent ducts are at a distance of more than 1/5 of the craft's breadth from the craft's side plating, but at least 0.5 m; therewith, this distance shall be measured normally to the craft's center plane at the level of the maximum draught. Where this provision is not applicable, the pipelines crossing several compartments and having open holes therein shall have the closing appliances remotely-controlled from the location above the upper deck or bulkhead deck; this rule also covers the case when those pipelines are laid at a height of less than 0.2 m above the craft's bottom shell. Cables shall be laid so that the water tightness of structures subdividing the craft remains intact.

3.2.6. Inside plating below the margin line, watertight windows may be fitted provided they cannot be opened and are sufficiently strong.

3.2.7. Generally, it shall be assumed that the permeability of compartments will be equal to 95 per cent. If ascertained by calculations that the average permeability of some compartment is less than 95 per cent, this lesser value may be assumed as the design one. However, under no conditions the permeability may be assumed less than the following values: Spaces intended for crew and passengers – 95 per cent; engine spaces – 85 per cent; storerooms and baggage rooms – 75 per cent; double bottom, fuel oil and other tanks (whichever results in more heavy consequences) – 0 % to 95 %.

3.2.8. The ships of a length $L_H \geq 4{,}0$ m shall have a watertight forward collision bulkhead within 10 per cent to 15 per cent of L_H from the forward point of the length L_{WL}, but not father than 1,5 m, as well as an aft watertight bulkhead which isolates either the compartment or cockpit for an outboard or inboard engine.

3.2.9. Transverse watertight bulkheads subdividing the craft, but the engine room bulkheads, may have hatches of tightness degree 1 for passage between compartments which may, due to their design and location, be used in any craft's condition including when inverted. Inspection arrangements of tightness degree 1 and classed as fire-retarding (class "B") or other structures of the same strength, which allow beforehand to make sure in safe opening the hatch, shall be fitted at the top and bottom parts of the above hatch coaming or on the hatch. An automatic alarm with indicating its opened position (uptight fit to the coaming) with the corresponding visual and acknowledged audible signals shall be provided to every hatch at the craft's conning position. Where such equipment is fitted on board, the Owner's Manual and the Information on Stability shall contain explicit instructions on its use including a necessity to keep them permanently closed at sea, particularly with deteriorating weather conditions, during craft's movement in narrow waters or areas of heavy traffic, and with similar hazards. In way of the above hatches, the bulkheads (on both sides) shall have the relevant instructions on their use.

3.2.10. The hulls of the multihull sailing craft of a length $L_H \geq 6.0$ m shall have transverse bulkheads (or buoyancy blocks) located so that the craft remains afloat and retains positive stability when at least half the length of one hull is flooded.

3.2.11. The length of its compartment shall be within 4 m, where the multihull craft's hull of a length $L_H \geq 6{,}0$ m has no inhabited, service or cargo spaces.

SECTION 4 REQUIREMENTS FOR FLOTATION ELEMENTS

Contents

4.1. General

4.1.1. The requirements in Table 2.4.1 shall be met by Flotation elements.

4.1.2. The airtightness of integrated air tanks and air containers is checked by pressure in compliance with Table 2.4.2

Table 2.4.1: Requirements for flotation elements

Requirements	Integrated air space	Air container	Inflated bag	Low density material
Airtightness	RT	RT	R	–
Mechanical robustness or protection	R	R	R	R
Draining facility	R	R	-	-
Resistance to or protection from sunlight	-	R	R	R
Fitted with an inflation point	-	-	R	-
Temperature resistant -40°C to +60°C	-	-	-	R
Water absorption max. 8 % by volume	-	-	-	R
Securely fastened	-	R	R	R
Encapsulated or resistant to liquids	-	-	R	R
Label: “Do not puncture air space/container/bag”	R	R	R	-

Symbols:

R – Checked by means of examination during craft’s survey by the Register.

RT – Checked by means of testing during craft’s special survey by the Register.

Table 2.4.2: Pressure for checking tightness

Initial overpressure	12.5 k Pa (1.25 m water head)
Maximum pressure drop in 30 s	0.75 k Pa (75 mm water head)
Maximum pressure drop in 60 min	7.5 k Pa (750 mm water head)

4.1.3. After complete immersing and holding under this condition for 8 days, the water absorption of low density material used for flotation elements shall not exceed 8 percent of their volume.

SECTION 5 PROTECTION AGAINST FLOODING

Contents

5.1. General

5.1.1. The mono hull craft of design categories **R**, **R100,** R**200, B** and **R0** shall have the structure of the type A, B or D craft. The cockpits of those craft are provided; they shall be quick-draining. In case of the inflated hull craft, this requirement is not applicable.

5.1.2. The multihull sailing craft of any category shall have the structure of the type A, B or D craft for all the hulls. For the craft of design category **D,** this requirement may be ignored.

5.1.3. Within one third of the hull length, high-speed powered craft shall have deck forward. Alternatively in order to effectively protect the cockpit against splashing and whipping, a spray shield or an awning may be fitted.

5.1.4. For the craft of design categories $\mathbf{C_3}$ and **D,** the requirement in 5.3 may be omitted where the cockpit is quick-draining.

5.2. Hull Openings

5.2.1. In compliance with the requirements for tightness set forth in Chapter 3 Section 9 and Chapter 4, [4.7 to 4.9], all the openings leading into the craft's hull or enclosed superstructures shall be fitted with weather tight closing appliances.

5.2.2. In the hull less than 0.2 m above a load waterline, no openings shall be fitted, excepting the openings being emergency escape hatches or the elements of systems provided with special closing appliances.

5.2.3. The openings that are being opened inwards the craft (outboard motor wells, etc.) shall be considered as the openings of potential flooding.

5.2.4. Application of the requirements of this Chapter are not done to the hull openings which are:

5.2.4.1. The holes leading into the watertight wells of a total volume less than $L_H B_H F_M/40$ or the quick-draining wells and cockpits;

5.2.4.2. If the craft is upright, pipes drains from watertight wells which if filled would not lead to down flooding or capsizing;

5.2.4.3. The openings to be opened in the homeport only;

5.2.4.4. The opening holes in the craft's sides corresponding to watertightness degree 2 which shall be permanently closed at sea while underway;

5.2.4.5. The engine exhausts or other openings connected to craft's systems only;

5.2.4.6. The openings in the sides of the outboard motor well (see Fig. 2.5.1) which are of:

Watertightness degree 2 and are located at a height of 0.1 m above the design waterline; watertightness degree 3 and are located at a height of 0.2 m above the

load waterline and also above the top of the transom in way of the engine mounting, provided that well drain holes are fitted; watertightness degree 4 and are located at a height of 0.2 m above the load waterline and also above the top of the transom in way of the engine mounting, provided that well drain holes are fitted. In this case, the length of the interior into which water may be admitted shall not exceed LH/6 with the height of the coaming isolating this space equal to at least 0.2 m above the design waterline.

5.2.5. In the Owner's Manual, appropriate warning entries "SAFETY PRECAUTION" regarding closing the openings specified in 5.2.4.3 and 5.2.4.4 shall be made.

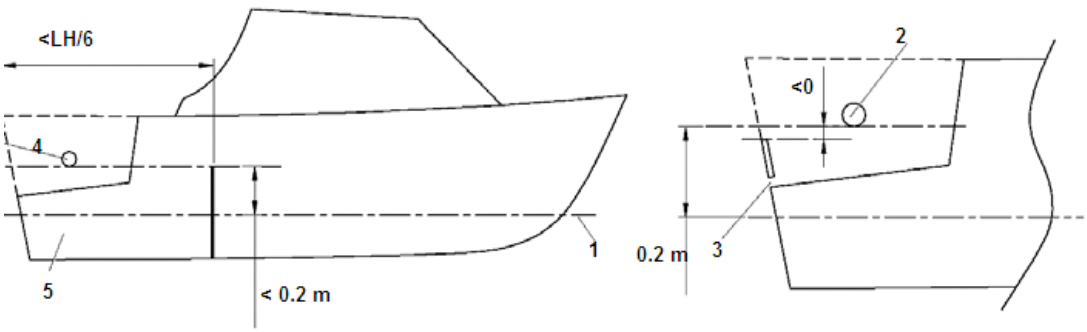

Fig. 2.5.1: Openings in outboard engine wells 1 – waterline at 100 % loading (design waterline); 2 – opening of watertightness degree 3; 3 – drain of outboard engine well; 4 – opening of watertightness degree 4; 5 – non-quick-draining space

SECTION 6 FREEBOARD AND LOAD LINE

Contents

6.1. General

6.1.1. Framing of the present Section is done on the understanding that the nature and stowage of the cargo, ballast, stores, etc. are such as to provide adequate stability of the craft and to avoid excessive structural stresses. According to the requirements of this Section, specification of the freeboard and the down flooding height are done assuming that the sailing of the craft of design categories **R0**, $\mathbf{C_1}$, $\mathbf{C_2}$, $\mathbf{C_3}$ and **D** will be suspended with weather conditions causing a risk to exceed the limiting wave height representative for the area of the craft's navigation, and making the craft underway head for a place of refuge as soon as possible.

6.1.2. The Register shall be satisfied that the craft's structural strength is adequate for the draught corresponding to the freeboard assigned and the navigational area. In compliance with the requirements of the Register's Rules or Rules of another recognized classification society, the craft that is constructed and maintained is considered to have sufficient strength for the corresponding freeboard.

6.1.3. The entry of the value of freeboard is done in the craft's Seaworthiness Certificate.

6.1.4. The Register assigns the freeboard to the craft with structural features, which make the application of these Section requirements inexpedient and impracticable, in such a way that the safety conditions are equivalent to those prescribed in this Section.

6.2. Deck Line And Loadline

6.2.1. The deck line is a horizontal line of 200 mm in length and 20 mm in breadth. Marking of the line shall be done amidships on each side of the craft, and normally its upper edge shall pass through the point where the continuation outwards of the upper surface of the freeboard deck intersects the outer surface of the side shell. Wherever the marking of the deck line by the use of above method is impossible or inconvenient, the one may be marked at another level provided that the freeboard value is correspondingly corrected. The deck line is not marked if the load line is not.

6.2.2. Load line

6.2.2.1. The load line mark shall consist of a ring of 200 mm in outside diameter and 20 mm wide separated by a vertical line of 20 mm wide and intersected by a horizontal line of 300 mm in length and 20 mm in breadth in such a way that the upper edge of that line passes through the ring center. The ring center shall be placed amidships at a distance equal to the freeboard assigned for the given navigational area, measured vertically below the upper edge of the deck line (Fig. 2.6.1).

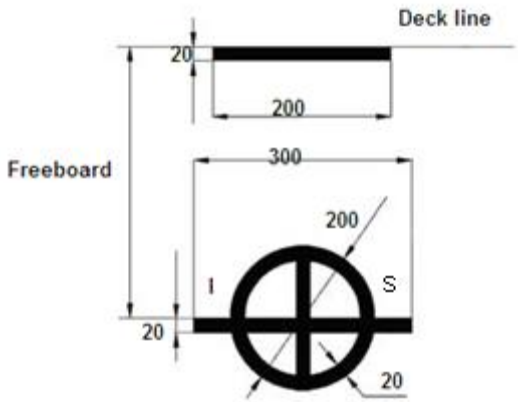

Figure 2.6.1: Load line mark

6.2.2.2. On all the craft of less than 10 m long, the load line may be omitted.

6.2.2.3. Marking of the load line shall be done on both sides of the craft.

6.2.2.4. The letters shall be of a normal script of 75 mm high.

6.2.2.5. On a dark background, the load line mark and letters shall be painted white and black on a light background. With the help of another approved way, they may be welded to or marked which ensures their durability.

6.3. Assignment of Minimum Freeboard

6.3.1. Conditions of freeboard assignment.

6.3.1.1. Under normal navigational conditions in the area of craft's operation, the craft's design and arrangements shall prevent the flooding of holds or restrict its consequences. To the extent that it is practicable and necessary, the craft shall have watertight bulkheads which ensure effective subdivision, as well as appropriate systems for draining compartments.

6.3.1.2. The requirements of Chapter 3 shall be met by the design of superstructures and coamings on the freeboard deck.

6.3.1.3. As the one that is specified in Section 9, Part III "Equipment, Arrangements and Outfit", the coaming height for closures located in any part of the craft shall correspond to that one.

6.3.1.4. The requirements of Section 9, Part III "Equipment, Arrangements and Outfit" shall be met by the doors of enclosed superstructures and the covers of companion hatchways in a space inside the hull.

6.3.1.5. The requirements of Section 9, Part III "Equipment, Arrangements and Outfit" shall be met by the design of scuttles, windows and skyights.

6.3.1.6. The freeboard shall be not less than the required in 6.4.3.

6.3.1.7. The minimum freeboard for the type C craft shall be assigned not less than the tabular one specified in 6.4.1; in this case, the down flooding height determined in 6.4.2 and 6.4.3 shall not be reduced.

6.3.1.8. Assignment of the minimum freeboard for the type E craft shall be done not less than the down flooding height that is determined in 6.4.2 and 6.4.3.

6.3.1.9. The minimum freeboard for the type A, B and D craft may be established not less than the tabular one taking into account the set forth in 6.3.2 and 6.3.3; in this case, the down flooding height determined according to 6.4.2 and 6.4.3 shall not be reduced.

6.3.2. **Freeboard of craft of design categories R, R100, R200 and B.**

6.3.2.1. The freeboard assigned to the craft meeting the requirements of these Rules shall be not less than the tabular one given in Table 6.4.1.

6.3.2.2. As specified in 6.3.2.3 to 6.3.2.5, the tabular freeboard shall be increased by the value of the corrections.

6.3.2.3. Correction for depth. If the design depth D exceeds LWL/15, the tabular freeboard shall be increased by the value, in mm: $(D - L_{WL} / 15)\ L_{WL} / 0.48$. If D is less than $L_{WL}/15$, the tabular freeboard is not reduced.

6.3.2.4. Correction for coaming height. The craft's tabular freeboard may be increased where the height of even one coamings of the deck openings leading to the spaces which are considered as independent compartments in verifying floodability is less than the required by these Rules.

The increase of the tabular freeboard height shall be:

$$\Delta f = h_H - h_A$$

Where $h_H - h_A$ = the greatest difference of the required and the actual coaming heights.

6.3.2.5. Correction for angle of deck edge immersion1. Irrespective of the requirements in 6.3.2.1, 6.3.2.3 and 6.3.2.4, for the craft of under 15 m in length the freeboard of pleasure craft shall be such that the angle of deck edge immersion is at least 12° and at least 6° for the craft of 24 m in length. With the help of linear interpolation, intermediate values are to be determined.

6.3.2.6. Minimum bow height of freeboard.

a. The vertical distance at the forward perpendicular between the waterline corresponding to the freeboard assigned at the maximum designed trim at the bow, and the top of the exposed deck at the craft's side is known as minimum bow height of freeboard, which shall not be less than, in mm:

$$56\,L\,(1 - 0.002\,L_{WL})$$

b. The requirements of 6.3.2.6.e or 6.3.2.6 shall be respectively met by the extension of sheer or a superstructure attributed to the bow height of freeboard and specified in 6.3.2.6.a

c. Irrespective of the requirement in 6.3.2.6.a, the minimum "protected freeboard" being measured similarly to the bow height of freeboard according to 6.3.2.6.a, but to the top of the bulwark rail or visor shall not be less than 0.1 L_{WL}.

d. Where the required bow height of the "protected freeboard" as required is obtained by provision of a bulwark or visor, the latter shall extend from the stem to the point located at a distance of not less than 0.1L_{WL} aft of the forward perpendicular.

e. The extension of sheer attributed to the minimum bow height of freeboard and that is specified in 6.3.2.6.a shall not be less than 0.15L_{WL} from the forward perpendicular. In this case, every point of the real sheer shall be situated not lower than the parabolic curve having its origin at 0.15L_{WL} abaft the forward perpendicular to the straight line which is drawn through the point of the real sheer at the craft's middle of the length and passes through the point at the fore perpendicular which corresponds to the minimum freeboard forward.

f. The extension of a superstructure attributed to the bow height freeboard and specified in 6.3.2.6.a shall not be less than 0.07L_{WL} aft from the forward perpendicular. The superstructure shall be enclosed

6.3.2.7. Minimum stern height of freeboard.

a. Minimum stern height of freeboard which is determined similarly to 6.3.2.6.a, but at the after perpendicular at the maximum designed trim by the stern shall be not less than half the bow height of freeboard as specified in 6.3.2.6.a.

b. Where the stern height of freeboard specified in 6.3.2.7.a is attributed to sheer or a superstructure, the extension thereof shall be not less than half that required in 6.3.2.6.e and 6.3.2.6.f, respectively.

6.3.3. **Freeboard of craft of design categories R0, C_1, C_2 and C_3.**

6.3.3.1. The freeboard assigned to the craft that meets the requirements of these Rules and having no watertight superstructures shall be not less than the tabular one given in Table 2.6.1.

6.3.3.2. The bow height of the freeboard for the craft of design categories **C** and $\mathbf{C_1}$ dealing with the A, B or D types shall be at least 500 mm and the stern height of the freeboard, not less than the minimum freeboard amidships.

6.3.3.3. In compliance with the set forth in 6.3.2.6 and 6.3.2.7, the bow and stern height of the freeboard for the craft of design categories **R0** and $\mathbf{C_1}$ dealing with the C or E types shall be determined.

6.3.3.4. For the craft of design categories $\mathbf{C_2}$, $\mathbf{C_3}$ and **D** dealing with the A, B or D types, no increase of the freeboard forward and aft is required. According to Fig. 2.6.2, the bow height of the freeboard within a length of $L_H/3$ for the craft of design categories $\mathbf{C_2}$, $\mathbf{C_3}$ and **D** dealing with the C or E types shall be increased.

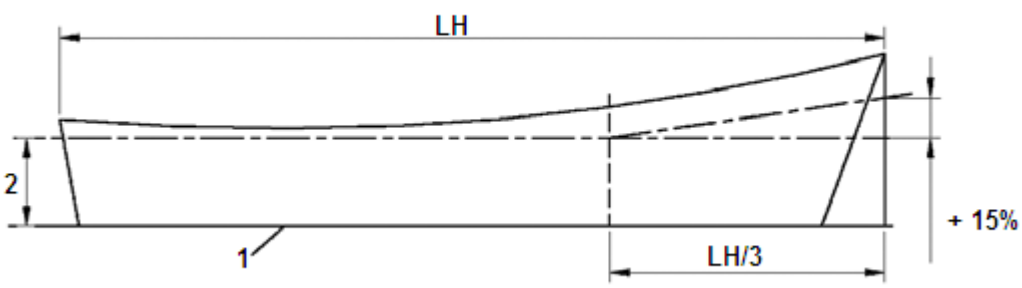

Figure 2.6.2: Increased freeboard as required 1 – waterline; 2 – minimum freeboard

6.3.3.5. By 20 percent, local reduction of the freeboard for the craft of design categories $\mathbf{C_2}$, $\mathbf{C_3}$ and **D,** which meet the requirements in Section 3,[3.3], may be done, in way of the outboard motor installation.

6.4. Tabular Freeboard and Downflooding Height

6.4.1. By using Table 2.6.1, depending on the craft's design category and type, the tabular freeboard F_0 is determined.

Table 2.6.1: Tabular freeboard

Craft's	Tabular freeboard F_0, mm

characteristics		Design category								
Type	Length L_H, m	**R**	**R100**	**R200**	B	**R0**	**C_1**	**C_2**	**C_3**	**D**
A	24	500	400			300	250	200	150	100
	20	-	375							
	15	-		340						
	≤10	-								
B	24	500	400	400	400	235	180	160	120	100
	20	-	375	375	375					
	15	-		340	340					
	≤10	-								
C	any	No operation					1000	600	300	100
D	any	No operation				400	300	250	200	100
E	any	No operation					1900	1000	500	400
Note: Quantities of F_0 for intermediate values of L_H are determined by linear interpolation.										

6.4.2. Determination of the downflooding height is done by using Tables 2.6.2 and 2.6.3 depending on the craft's design category and type, as well as on the location of closing appliances on the craft's hull and superstructures in ways specified in 9.1, Part III "Equipment, Arrangements and Outfit".

Table 2.6.2: Down flooding height

Craft's type	**Down flooding height, mm**								
	Design category								
	R	**R100**	**R200**	B	**R0**	**C_1**	**C_2**	**C_3**	**D**
C	No operation					1200	1000	500	250
D	No operation				800	700	600	300	200

6.4.3. According to 6.4.2 the down flooding height that is determined, shall be increased up to the values given in Table 2.6.3 and specified in ISO 12217-1:2002, ISO 12217-2:2002 and ISO 12217-3:2002 depending on the craft's constructive type, length and design category.

Table 2.6.3: Down flooding height

Craft of length L_H < 4.8 m		
Design category	**Craft's type**	**Down flooding height, m**
C_1 and C_2	Any	≥ 0.30 m
C_3 and D	A,B	L_H /20, but at least 0.20 m
	Any	≥ 0.20 m
Craft of length 4.8 ≤ L_H < 6 m		
Design category	**Craft's type**	**Down flooding height, m**
C_1 and C_2	A,B	L_H /17, but at least 0.30 m
	D	L_H /15 – for craft with a stationary main engine, and at least 0.3 m for others
	C,E	L_H /12
C_3 and D	A,B	L_H /20
	D	L_H /15 – for craft with a stationary main engine, and L_H /24 m for others
	C,E	L_H /14, but at least 0.40 m
D	C,E	≥ 0.40 m

Sailing craft of length L_H ≥ 6 m		
Design category	**Craft's type**	**Down flooding height, m**
R, R100,R200 and B	A, B	L_H /17
R0	A, B,D	L_H /17
C_1	A, B	L_H /17, but not more than 0.75 m
	D	L_H /17, but not more than 0.90 m
	C	L_H /17
C_2	A, B,D	L_H /17, but not more than 0.70 m
	C,E	L_H /17
C_3	A, B,D	L_H /17, but not more than 0.40 m
	C,E	L_H /17, but at least 0.70 m
Non-sailing craft of length LH ≥ 6 m		
Design category	Craft's type	**Down flooding height, m**
R, R100,R200 and B	A, B	L_H /17
R0	A, B,D	L_H /17
C_1	C	L_H /12, but not more than 1.30 m
	A, B,D	L_H /17, but not more than 0.75 m
	A, B,D	L_H /20, but not more than 0.75 m where the down flooding height and angles are determined from the waterline corresponding to the displacement determined as 133 % of the maximum permissible
C_2	E	L_H /10, but not more than 1.30 m
	C	L_H /12, but not more than 1.20 m
	A, B,D	L_H /17, but not more than 0.75 m

	A, B,D	L_H /20, but not more than 0.75 m where the down flooding height and angles are determined from the waterline corresponding to the displacement determined as 133 % of the maximum permissible
C_3	E	L_H /20, but not more than 0.75 m
	C	L_H /20, but not more than 0.60 m
	A, B,D	L_H /20, but not more than 0.40 m
	A, B,D	L_H /24, but not more than 0.40 m where the down flooding height and angles are determined from the waterline corresponding to the displacement determined as 133 % of the maximum permissible
D	Any	L_H /20, but not more than 0,40 m
	A, B,D	L_H /24, but not more than 0,40 m where the down flooding height and angles are determined from the waterline corresponding to the displacement determined as 133 % of the maximum permissible

6.4.4. Sea openings for the craft of design categories **R0**, **C_1**, **C_2**, **C_3** and **D** are permitted within the aft quarter of the hull length L_H with their total area of not more than 50 L_H^2, in mm^2, and the height above the load waterline of at least 75 per cent of the required in 6.4.3.

6.4.5. For open centerboard, drop keel and dagger-board casings, the down flooding height of sailing craft shall be not less than half the minimum required in 6.4.3.

6.5. Draught Scales

6.5.1 Draught scales shall be graduated in at least decimeters. With the help of a clearly visible paint and by means of alternate stripes of different colours, the marking of the scale shall be done and shall present the range from the minimum to maximum draught potential in the craft's operation. Marking of the draught scale shall be done in the craft of over 6.0 m long. Marking of the draught scales in the craft of over 15.0 m long shall be done in the craft's

forward and aft ends. In the craft of over 12.0, long, the draught scales shall be welded on or marked by another Register-approved way while ensuring their durability.

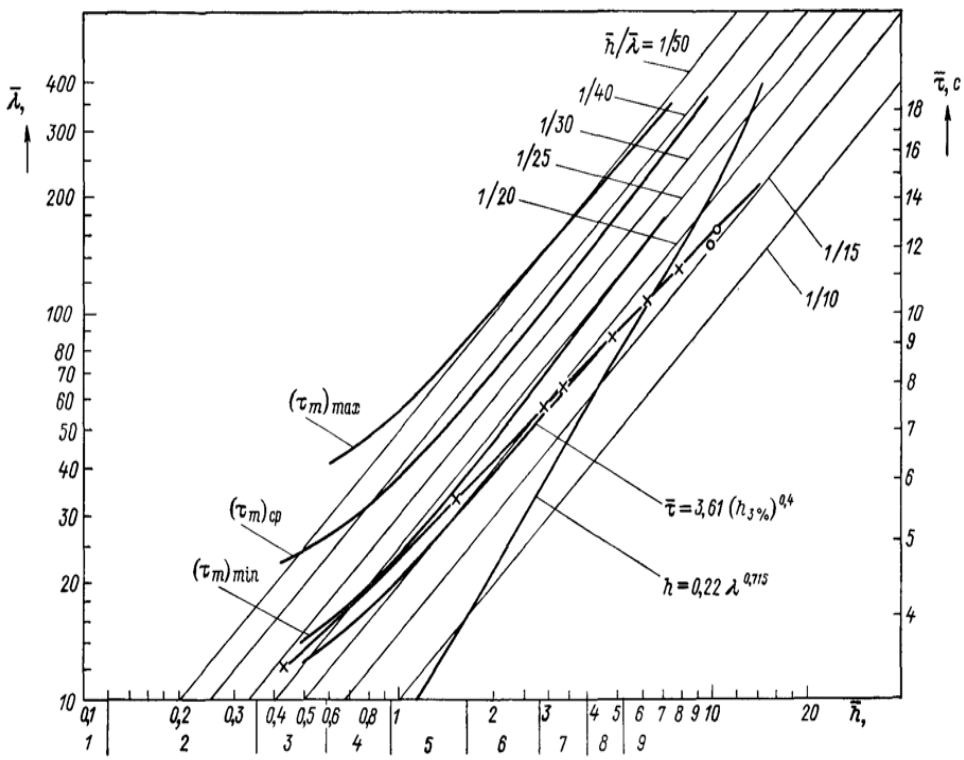

Figure 2.6.3: Parameters of irregular waves

Table 2.6.4: Characteristics of wave impact for developing waves of various intensity

Characteristic	Unit	Sea state, number						
		2	3	4	5	6	7	8
Basic parameters of design wind waves spectrum								
Wave height, $h_{3\%}$	m	0.52	1.5	2.0	3.5	6.0	8.5	11.0
Mean period of developing waves, τ–	s	2.0	3.1	4.0	5.2	6.8	8.1	9.2
Variance of wave ordinates, Dζ	m^2	0.001	0.056	0.143	0.438	1.29	2.58	4.33
Characteristics of the greatest breaking wave								
Length, L_{br}	m	3.1	7.5	12.0	21.1	35.6	50.7	95.0
Velocity, V_{br}	m/c	2.2	3.4	4.2	5.6	7.3	8.7	9.9
Height, h_{br}	m	0.24	0.6	0.9	1.6	2.8	3.9	5.1
Period, τ_{br}	s	1.1	1.6	2.1	2.8	3.6	4.3	4.0
Action time, t_{br}	s	0.27	0.4	0.5	0.7	0.9	1.1	1.2
Pressure, p_{br}	K Pa	2.4	5.8	9.2	16.0	27.5	39.0	50.0

By using the following parameters, the characteristics of the largest plunger breaking wave in the seas of a given intensity are determined:

Wave height with 3 % probability of exceeding level, in m $h_{3\%} = 2.11\bar{h}$;

Maximum wave height, in m $h_{max} = h_{1\%} \approx 1.15 h_{3\%}$;

Height of the breaking part of the wave, in m $h_{br} = 0.4 h_{max}$;

Length of the breaking part of the wave, in m $l_{br} = 0.5\bar{L} = \frac{g}{4\pi\bar{\tau}^2}$

Periodicity of wave impact, s $\tau_{br} \approx 0.53\,\tau$;

Breaking velocity, in m/s $v_{br} \approx 1.08\bar{\tau}$;

Action time, in s $t_{br} = 0.25\,\tau_{br}$;

Pressure in the breaking base, k Pa $p_{br} = \rho\, g\, h_{br}$

GRAPHICAL CHARTS FOR CALCULATING THE MOMENT OF INERTIA OF ADDED WATER MASSES AND THE DAMPING COEFFICIENT

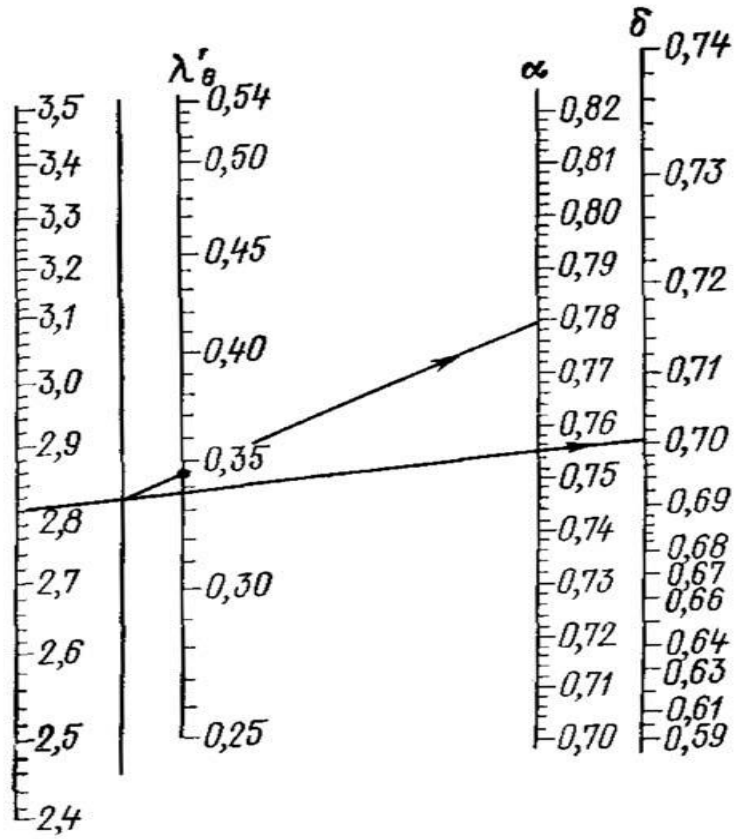

Figure 2.6.4: Graphical chart for determining the equivalent moment of inertia of added water masses λ'_0

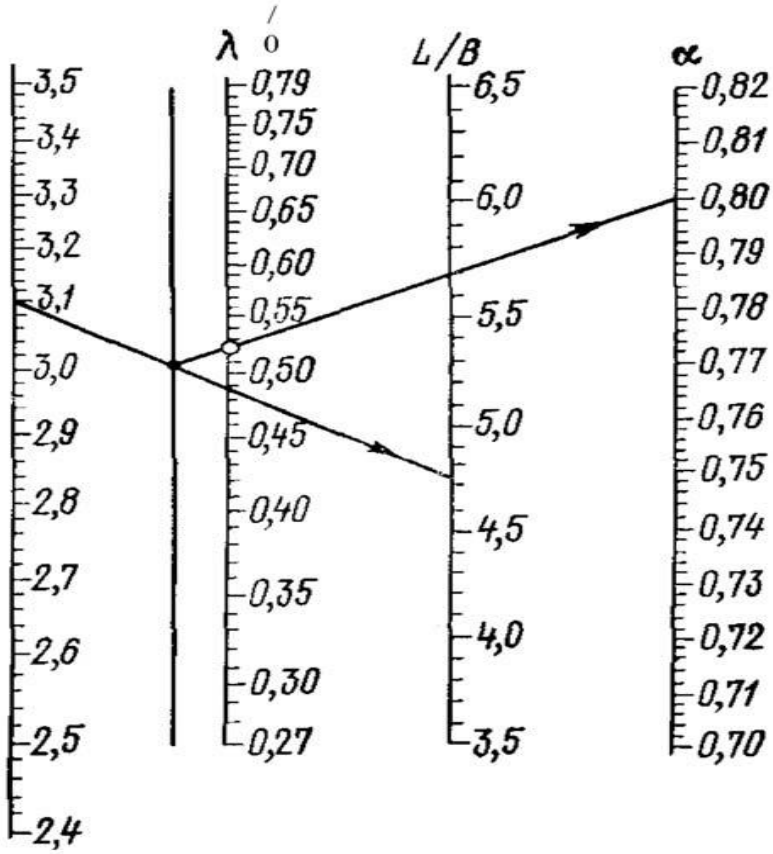

Figure 2.6.5: Graphical chart for determining the equivalent moment of inertia of added water masses λ'_0 for craft with the large ratio L_H/B_H

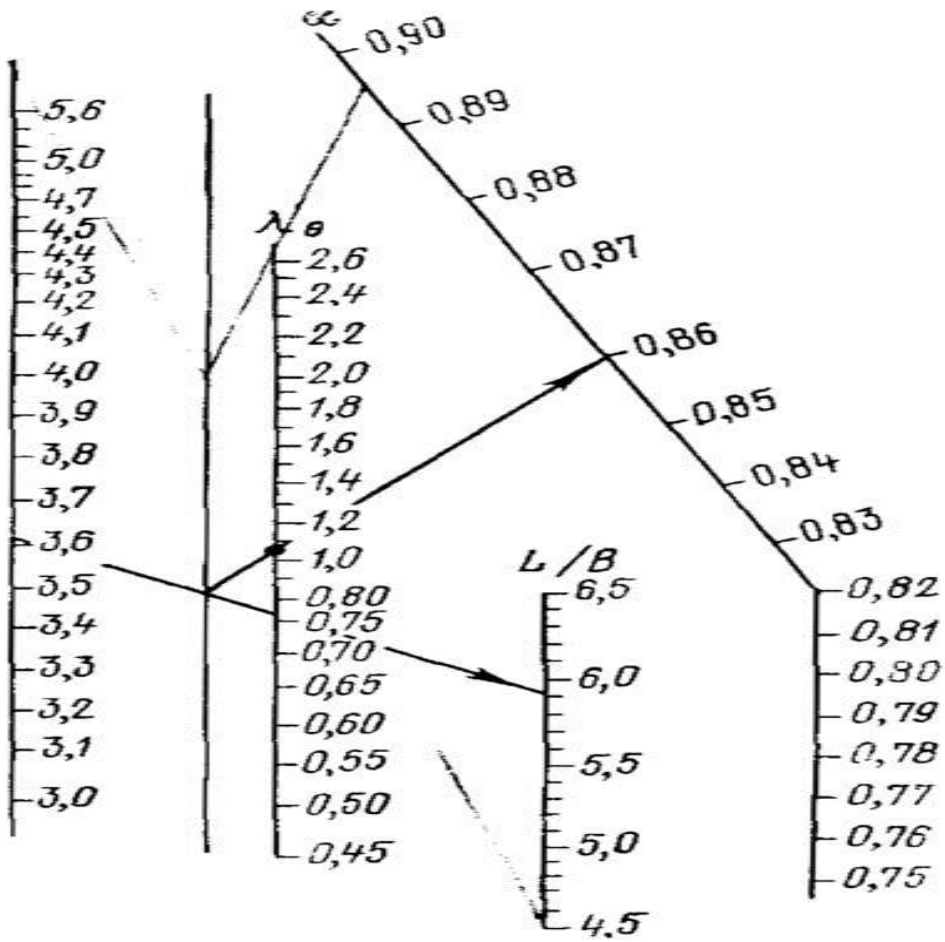

Fig. 2.6.6

Graphical chart for determining the equivalent moment of inertia of added water masses λ'_0 for craft with the large ratio B_H/d_H

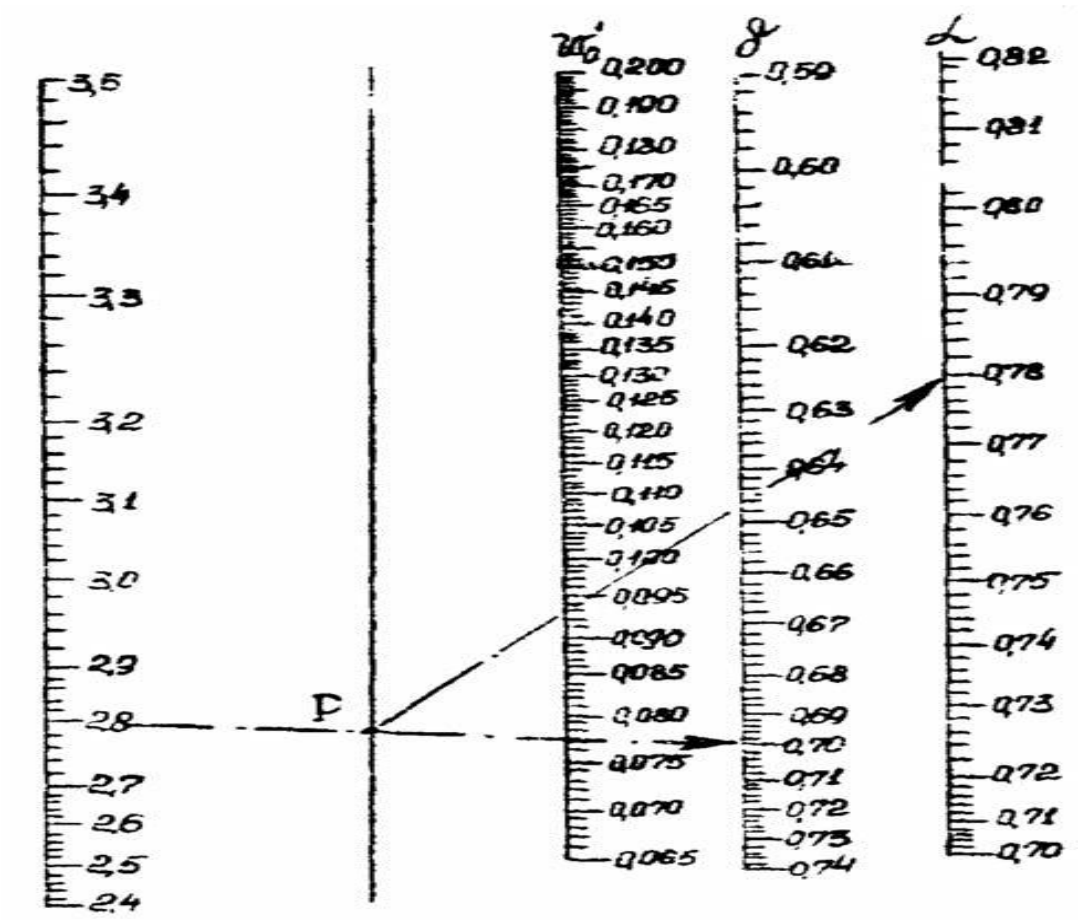

Fig. 2.6.7: Graphical chart for determining the reduced damping coefficient ω'_0 for craft with the large block coefficient

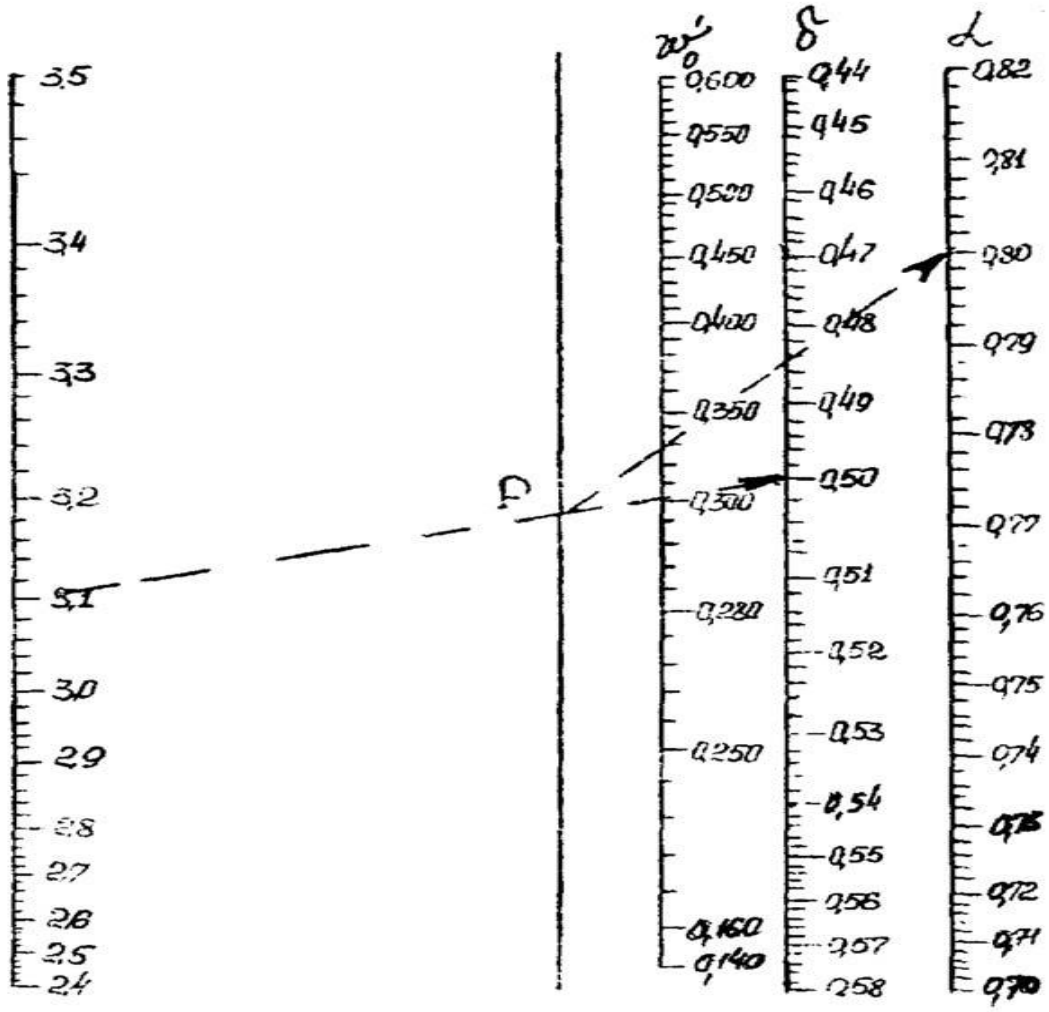

Fig. 2.6.8: Graphical chart for determining the reduced damping coefficient ω'_0 for craft with the small block coefficient

CHAPTER 3 HULL CONSTRUCTION

CONTENTS

SECTION 1 GENERAL

Contents

1.1. Application

1.1.1. The requirements of this Part of the Rules apply to the craft having a length of 2.5 m to 24 m with the welded hull in steel or aluminium alloys, as well as in glass reinforced plastic.

1.2. General Requirements

1.2.1. All the hull structures regulated by the present Part of the Rules are subject to the Register survey. For this purpose am access shall be provided for their survey.

1.2.2. The structures regulated by the present Part of the Rules shall comply with the approved technical documentation specified in Part 1“Classification and Surveys”.

1.3. Definitions, Designations and Explanations

1.3.1. The definitions and explanations relating to the general terminology of the Rules are given in the General Regulations and in Part 1 “Classification and Surveys”. For the purpose of this Part of the Rules the following definitions, designations and explanations have been adopted:

Upper deck is the uppermost continuous deck extending the full length of the craft.

Moulded depth D is the vertical distance, in m, measured amidships from the top of the plate keel or from the point where the inner surface of shell plating abuts on the bar keel, to the top of the upper deck beam at side.

Length L is the distance, in m, measured at the level of the summer load waterline from the forward side of the stem to the after side of the rudder post or to the centre of the rudder stock (in the absence of the rudder post), or the distance equal to 96 per cent of the craft’s length measured at the level of that waterline from the forward side of the stem to the after side of the after end of the craft, whichever is greater.

However, L need not be greater than 97 per cent of the craft’s length measured at the level of the maximum summer waterline.

Where the craft’s fore or aft end has an unusual form, the length L is subject to special consideration by the Register.

After perpendicular is a vertical line in the craft centre plane which limits the craft length L at the aft end.

Block coefficient C is the block at length L, breadth B and draught d by the formula

Maximum summer waterline is the waterline on the level of the centre of the load line ring for the upright craft without heel and trim.

Midship section is the hull section at the middle of the craft’s length *L*.

Superstructure is a decked structure on the upper deck extended from side to side of the craft or with the side plating not being inboard of the shell plating more than 4 per cent of the craft's breadth from any craft's side.

Tight structure means a structure which is impervious to water or other liquids.

Lower decks are the decks located below the upper deck. Where the craft has more than one lower deck, they are called: second deck, third deck, etc. counting from the upper deck.

Forward perpendicular is a vertical running through the craft centre plane at a point of intersection where the maximum summer waterline and the fore side of the stem intersect.

Craft's ends are the portions of the craft's length beyond the midship region.

Draught d is the vertical distance, in m, measured amidships from the top of the plate keel or from the point where the inner surface of shell plating abuts upon the bar keel, to the maximum summer waterline.

Frames are vertical beams (members) of side framing fitted in the plane of floors or bilge brackets.

Freeboard deck is the deck from which the freeboard is calculated.

Superstructure deck is a deck forming the top of a tier of superstructure. Where the superstructure has several tiers, its decks are called: first tier superstructure deck, second tier superstructure deck, etc. counting from the upper deck.

Bulkhead deck is the deck to which the main transverse watertight bulkheads are carried where subdivision is provided.

Deckhouse top is a deck forming the top of a tier of a deckhouse. Where the deckhouse has several tiers, its decks are called: first tier deckhouse top, second tier deckhouse top, etc. counting from the upper deck. If a deckhouse is fitted on a superstructure deck of the first tier, second tier, etc., the deckhouse top is called accordingly: the top of second tier deckhouse, third tier deckhouse, etc.

Platform is a lower deck extended over portions of the craft's length or breadth.

Strength deck is the deck forming the upper flange of the hull girder. The quarter deck outside the transition area may be considered as the strength deck.

Deckhouse is a decked structure on the upper deck or superstructure deck with its side plating, if one side at least, being inboard of the shell plating by more than 4 per cent of the craft's breadth.

Specified speed v is the maximum speed of the craft, in knots, at the maximum summer waterline in still water at the rated power of the propulsion plant.

g = 9.81 m/s^2 acceleration of gravity; ρ = 1.025 t/ m^3 – density of sea water.

Midship region is the part of the craft's length equal to 0.4*L* (0.2*L* forward and aft of amidships), unless expressly provided otherwise

Moulded breadth B is the greatest moulded breadth of the craft, in m, measured amidships to the moulded line of the frame.

Spacing is the distance between primary members assumed on the basis of the value of standard spacing a_0, in m.

SECTION 2 MATERIALS

Contents

2.1. General

2.1.1. Materials intended for structures covered by the provisions of this Chapter shall fulfill the requirements specified in Part 2 – Materials and Welding of the INTLREG Rules.

Where aluminium alloys are used for the structural members, the requirements specified in 2.3.1 shall be taken into account.

2.2. Hull Structural Steels

2.2.1. Normal strength structural steel NW of grade A shall be used in the ship hull construction. In justified cases, higher strength steel may be used (see Table 3.2.1).

2.2.2. In Table 3.2.1 are indicated the applied notations of hull structural steel, division into grades and the corresponding values of yield point R_e (in accordance with the requirements specified in the above mentioned Part 2 – Materials and Welding) as well as the values of material factor *k* determined in accordance with formula 2.2.3.

Higher steel grades than A or AH may be required by INTLREG separately depending on the structure specificity or the assumed ship operating conditions.

Table 3.2.1 Hull steel characteristics

Steel grades				R_e [MPa]	k
A	B	D	E	235	1.00
AH32	-	DH32	EH32	315	1.28
AH36	-	DH36	EH36	355	1.39

2.2.3. Material factor *k* for steels with a yield point exceeding 235 MPa – other than those mentioned in 2.2.2 – which may be used subject to INTLREG consent in each particular case, shall be determined in accordance with the following formula:

$$k = \frac{R_e + 60}{295}$$

2.2.4. If a steel with a yield point less than 235 MPa is used for special structures, then material factor *k* shall be determined in accordance with the following formula:

$$k = \frac{R_e}{235}$$

2.3. Other Structural Materials

2.3.1. Aluminium Alloys

2.3.1.1. Aluminium alloys of grade specified in Part 2 – Materials and Welding may be used for construction of:

- hull structure,
- superstructures and deckhouses,
- bulwarks, windscreens, masts, wave breakers, etc.,
- hatch covers, closing appliances, stairs, ladders, and gangways,
- Masts.

2.3.1.2. Strength of aluminium structure shall not be worse than that required for steel structures. To satisfy this condition, the requirements specified in 2.3.1.6 and 13.3 shall be fulfilled.

2.3.1.3. Material factor k for aluminium alloys shall be determined in accordance with the following formula:

$$k_a = \frac{R_{mal}+R_{eal}}{635} \text{ [cm}^3\text{]}$$

Where the value of R_{eal} shall not be taken greater than 0.7R for calculations. The symbols have the following meaning:

R_{eal} – aluminium alloy yield point, [MPa];
R_{mal} - aluminium alloy tensile strength, [MPa]

2.3.1.4. Butt joints of plates shall be arranged in such locations where are the minimum stress values so that the strength after welding be sufficient. Where this condition cannot be fulfilled, post-weld values of R_{eal} and R_{mal} shall be taken to determine material factor k.

2.3.1.5. When determining material factor k_{al} for the post-weld values of R_{eal} and R_{mal}, their values shall not be taken greater than specified in Table 3.2.2 – for rolled products and in Table 3.2.3 for extruded products of both open and closed sections. The symbols are consistent with those used in *Part 2 – Materials and Welding*.

Table 3.2.2 Minimum mechanical properties of post-weld aluminium alloy rolled products

Aluminium alloy	Material condition	Thickness [mm]	R_{eal} [Mpa]	R_{mal} [Mpa]
EN AW – 5083	O or H111	t ≤ 40	125	275
EN AW – 5083	H116,H321	t ≤ 40	130	280
EN AW – 5383	H116,H321	t ≤ 40	140	290
EN AW – 5059	O or H111	t ≤ 40	160	300
EN AW – 5059	H116,H321	t ≤ 40	185	325
EN AW – 5086	O or H111	t ≤ 40	95	240
EN AW – 5086	other	t ≤ 40	95	240

Table 3.2.3 Minimum mechanical properties of post-weld aluminium alloy extruded products (sections)

Aluminium Alloy	Material condition	Thickness [mm]	R_{eal} [Mpa]	R_{mal} [Mpa]	Section Type
EN AW – 5083	O or H112	t ≤ 40	125	275	Open
EN AW – 5083	H111	t ≤ 40	110	270	Open
EN AW – 5086	O or H111	t ≤ 40	95	240	Open
EN AW – 5086	O or H111	t ≤ 40	95	240	Open
EN AW – 5086	H112	t ≤ 40	95	240	Open
EN AW – 6082	T6	t ≤ 40	110	170	closed

Table 3.2.4 Scantling of Aluminum alloy members

No.	Scantling being determined	Applicable formula
1	Thickness of shell plating, deck plating (without coating), bulkhead plating and internal divisions and other parts made of plates	$t_{al} = 0.9\frac{t}{\sqrt{k_{al}}}$ – for the whole hull $t_{al}=\frac{t}{\sqrt{k_{al}}}$ - for superstructure
2	Sectional modulus of stiffeners or girders	$w = \frac{w}{k_{al}}$, [cm³]
3	Cross-section moment of inertia of stiffeners, girders or pillars	$I_{al} = I\frac{E}{E_{al}} \cong 3I$,[cm⁴]
4	Cross-sectional area of pillars or cross-sectional area of the member webs	$S_{al} = \frac{S}{K_{al}}$

Where:

k_{al} -material factor for aluminium alloy determined in accordance with 2.3.1.3,

t - required thickness of member made of NW steel, [mm],

t_{al} - required thickness of member made of aluminium alloy, [mm],

W – required section modulus for NW steel, [cm^3],

W_{al} – required section modulus for aluminium alloy, [cm^3],

I – required moment of inertia for steel girder, [cm^4],

I_{al} – required moment of inertia for aluminium alloy girder, [cm^4],

S – required cross-sectional area for steel pillar or girder web cross-sectional area, [cm^2],

S_{al} – required cross-sectional area for aluminium alloy pillar, [cm^2],

E - modulus of elasticity for NW steel, [MPa],

E_{al} - modulus of elasticity for aluminium alloy applied, [MPa].

2.3.2. Alternative Materials

2.3.2.1. Application of alternative materials for ship structure is subject to INTLREG consent in each particular case.

2.4. Corrosion Protection

2.4.1. For new constructions of steel hull ships, all the ballast tanks whose boundaries are formed by the shell plating shall be provided with adequate protective coating, either epoxy or equivalent, applied in accordance with the manufacturer's guidelines. It is recommended that the coating be of bright color.

2.4.2. All surfaces of the steel ship structure shall be provided with corrosion protection paint, applied in accordance with the paint manufacturer's requirements or otherwise effectively protected against corrosion.

2.4.3. When deciding on the type of protective coating, the intended service conditions (among others, the cargo) shall be taken into account.

2.4.4. On the Owner's request, the corrosion allowances required in 2.5 may be reduced or neglected subject to INTLREG consent in each particular case on condition that effective corrosion protection of the structure has been provided. In that case, the ship may be assigned additional mark PAC in the symbol of class.

2.4.5. In steel tanks intended for the carriage of ballast water or liquid cargo (oil) or in cargo holds intended for the carriage of dry cargo or ballast water, the thickness of structural members shall be increased by the corrosion allowances in accordance with sub-chapter 2.5.

2.4.6. If the corrosion protection is achieved by cement coating, the construction shall be carefully cleaned of scale, rust and old paint coating first.

2.5. Corrosion Additions for Steel Hulls

2.5.1. Thickness of plating of vertical and horizontal bulkheads forming boundaries of the tanks, mentioned in paragraph 2.4.4, shall be increased by corrosion addition t_k determined in accordance with the formula below:

$$t_c = t_w + t_z$$

t_w – corrosion addition determined in accordance with paragraph 2.5.5 for the inner side of plating for the particular type of liquid carried in the tank, [mm];

t_z – corrosion addition determined in accordance with paragraph 2.5.5 for the outer side of the plating, taking account of the designation of the adjacent space, [mm].

2.5.2. Thickness of face plates, webs and brackets of stiffeners and girders, situated inside the tanks mentioned in paragraph 2.4.4, shall be increased by corrosion addition t_k determined in accordance with the formula below:

$$t_k = 2t_w \text{, [mm]}$$

Where stiffeners or girders of the tank bulkhead are at its outer side, the corrosion addition t_k shall be determined in accordance with the formula below:

$$t_k = 2t_z \text{, [mm]}$$

t_w and t_z – see 2.5.1.

For stiffeners made of rolled sections, the corrosion addition shall be determined taking account of the requirements specified in 12.6.1

2.5.3. For horizontal webs or face plates of stiffeners or girders, the corrosion allowance shall be additionally increased by 0.5 mm.

2.5.4. Corrosion additions t_w and t_z depend on area (A, B) of the tank or cargo hold in which the considered structural element is installed, as well as on the type of the agent acting on the considered side of the structural element in question.

Where the upper side of tank or cargo hold is closed by the weather deck, then A area of this tank or cargo hold is the area extending vertically from the weather deck (open deck) to the level 1.0 m below this deck. All other areas of tanks and cargo holds are B areas.

2.5.5. Depending on the type of agent acting on the considered side of the structural element, corrosion additions t_w or t_z are as follows:

- for A area

  1.5 mm – for ballast water;

  1.0 mm – for oil;

  0.5 mm – for dry cargo;

  0.0 mm – for (external) outboard water or air;

- for B area

  0.75 mm – for ballast water;

  0.50 mm – for oil;

  0.25 mm – for dry cargo;

  0.0 mm – for (external) outboard water or air

2.6. Corrosion Additions for Aluminium Alloy Hulls

For aluminium alloy hull structures, corrosion additions are not required.

SECTION 3 STRUCTURAL DESIGN

Contents

3.1. General

3.1.1. Methods of determining the geometrical and strength parameters of the hull structure members, specified in this Chapter, apply to the strength analysis of members unless stated otherwise in other chapters of this Part of the Rules.

Note

Rounding off the plate thickness to the nearest lower standard value within a margin of 0.25 mm is permitted.

3.2. Structural Arrangement

3.2.1. Span of Girders and Stiffeners

Design span l of girders and stiffeners shall be determined as shown in Figure 3.3.1. It is assumed that brackets are effectively supported by the adjacent structure. Design span l of curvilinear girders and stiffeners is measured as the length of chord between the supporting points.

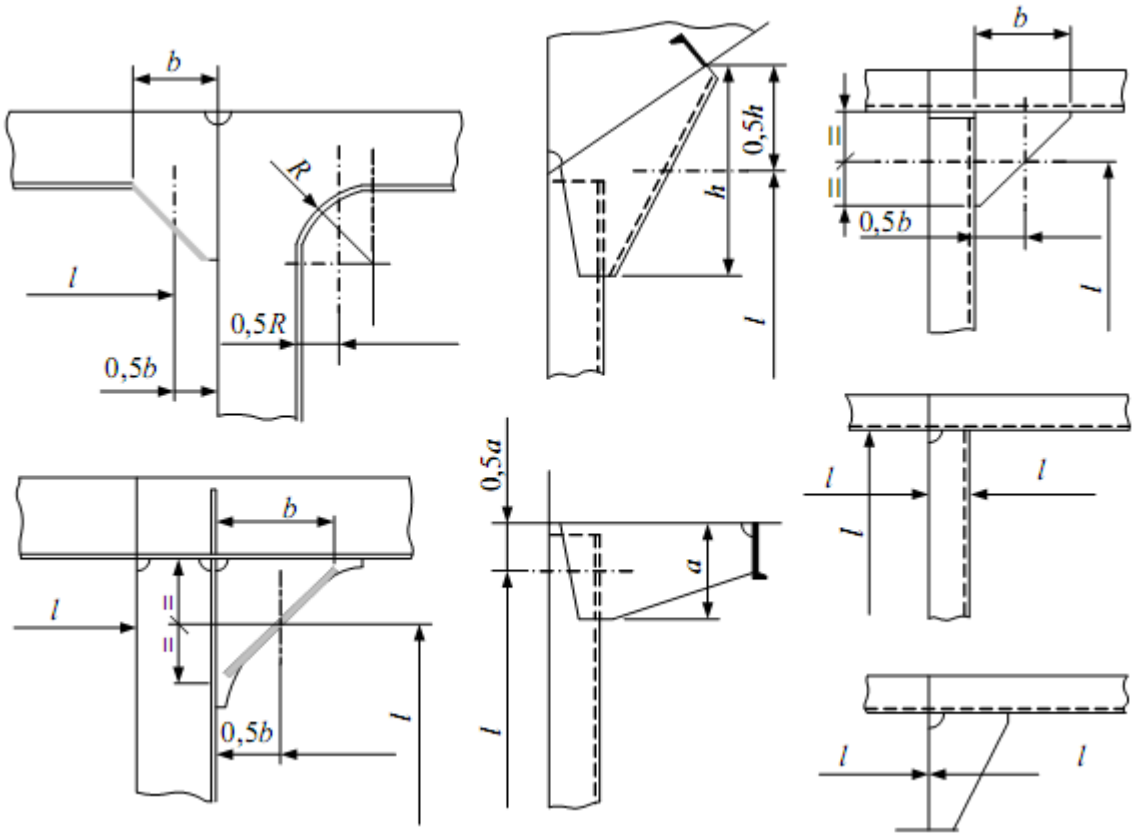

Figure 3.3.1: Determining the span of structural members

3.2.2. Effective Flange

3.2.2.1. Cross-sectional area of the effective plate flange for stiffener or simple girder shall be determined in accordance with the following formula:

$A_p = 10 b_e t$, [cm^2]

t – mean thickness of the effective flange, [mm];

b_e– effective flange breadth, [m]. Continuous stiffeners, parallel to the web of girder in question and located within width, may be included with 50% of their cross-sectional area in the effective plate flange area of the girder.

3.2.2.2. In general, the effective plate flange area shall not be less than the sectional area of the free flange.

3.2.2.3. Effective flange width b_e of plating stiffener shall be taken equal to the lesser of the two values determined in accordance with the following formulae:

$$b_e = \frac{1}{6} l, \text{ [m]}$$

$$b_e = 0.5(s_1 + s_2), \text{ [m]}$$

Where:

l – Stiffener span, [m];

s_1, s_2 – distances from stiffener in question to the adjacent stiffeners fitted at its both sides, [m].

Where extruded plates are used, s_1 and s_2 represent the widths of flat portions of the plates on both sides of the extrusion playing the role of stiffener.

3.2.2.4. Effective flange width of simple girder shall be determined in accordance with the following formula:

$$b_e = Kb, \text{ [m]}$$

Where:

$$b = 0.5(b_1 + b_2)$$

b_1, b_2 – distances from girder in question to the nearest girders of the same type, or divisions, fitted at its both sides, [m];

K – coefficient, taken from Table 3.3.1, depending on span l_z of the girder, as well as on number n of evenly spaced perpendicular stiffeners supported by the girder in question;

$l_z = l$ – for girder simply supported at its both ends, [m],

$= 0.6l$ – for girder fixed at its both ends, [m].

Table 3.3.1 Values of K

Number of stiffeners	l_z/b ratio							
	0.0	1.0	2.0	3.0	4.0	5.0	6.0	7.0 and more
≥6	0.0	0.38	0.67	0.84	0.93	0.97	0.99	1
5	0.0	0.33	0.58	0.73	0.84	0.89	0.92	0.93
4	0.0	0.27	0.49	0.63	0.74	0.81	0.85	0.87
≤3	0.0	0.22	0.40	0.52	0.65	0.73	0.79	0.80

For intermediate values of l_z/b ratio, coefficient K may be obtained by linear interpolation.

3.2.2.5. Effective flange width b_e of corrugated bulkhead girders perpendicular to the corrugations shall be taken as follows:

$b_e = 15t$ for trapezoidal corrugations (see Fig. 3.3.2-a);

$b_e = 20t$ for undulated corrugations (see Fig. 3.3.2-b);

or 0.1 b for both cases, whichever value is lesser;

Where: b – effective flange width, calculated in accordance with paragraph 3.2.2.4, t – corrugated bulkhead plating thickness.

Girder web cross-sectional area of a corrugated bulkhead shall not be greater than the effective flange cross-sectional area.

3.2.2.6. Effective flange width b_e of hatchway coaming shall be taken equal to 1/12 of its span. The assumed value of b_e shall not be greater than half the distance from hatchway coaming to the ship's side for longitudinal coamings or half the distance between the coaming and the nearest transverse bulkhead for transverse coamings.

3.2.3. Effective Cross-sectional Area of Web

Effective cross-sectional area of simple girders shall be determined in accordance with the formula below:

$A_s = 0.01 h_s t_s$, [cm^2]

t_s – web thickness, [mm];

h_s – net web height, [mm].

Net web height h_s shall be determined by deduction of cut-outs and openings in the cross-section being considered. If the edge of web opening is located at a distance less than $h/3$ from the cross section considered, h_s, shall be taken as the smaller of two values: h_s and (h_1+ h_2), as shown in Fig. 3.3.2.

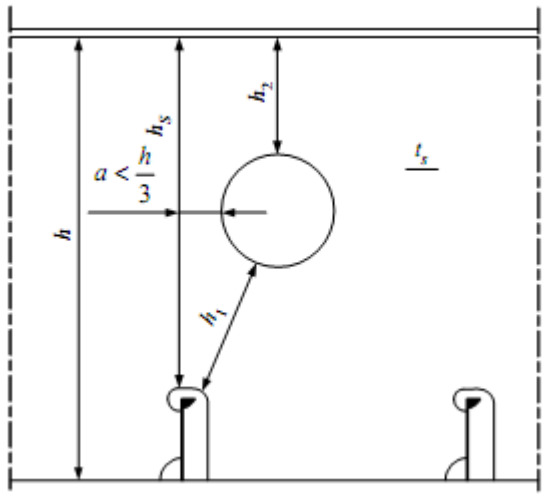

Figure 3.3.2: Determining net web height

3.2.4. Section Moduli and Moments of Inertia of Stiffeners and Girders

Section moduli and moments of inertia of cross-sections of stiffeners and girders required by this part of the *Rules* refer to the neutral axis parallel to the plating.

Where the web of structural member is not perpendicular to the plating, the value of the section modulus about the axis parallel to the plating for $\alpha < 15°$ (α – angle between the plane perpendicular to the plating and the web plane) may be determined approximately by multiplying the section modulus of the stiffener or girder assumed to be perpendicular to the plating by cos α. For $\alpha = 15°$, it may be assumed that the section modulus is the same as for $\alpha = 0°$.

Unless provided otherwise, the effective flange taken for the calculation shall be determined in accordance with 3.2.2.

Section modulus of corrugated bulkhead members may be calculated using the following approximate equations:

– for corrugated bulkhead member of trapezoidal cross-section and width equal to s_1

(Figure. 3.3.3 a):

$$W = \frac{ht}{2}(s_2 + \frac{s_3}{3\sin\alpha})$$

h, *t* – see Figure. 3.2.5 a), [mm];

s_2, s_3 – see Figure. 3.2.5 a), [m];

α see Figure. 3.2.5 a, [°],$\alpha \geq 40°$ shall be taken;

– for corrugated bulkhead member of undulated cross-section and width equal to *s* (Fig 3.3.3 b):

$$W = ctr^2$$

$$s = 4r \sin \beta$$

$$c = 2\frac{\beta + 2\beta cos^2\beta - 1.5 \sin 2\beta}{1 - \cos \beta}$$

t, *r*, β – see Figure. 3.2.5-b; *t*, *r* – [cm], β – [rad].

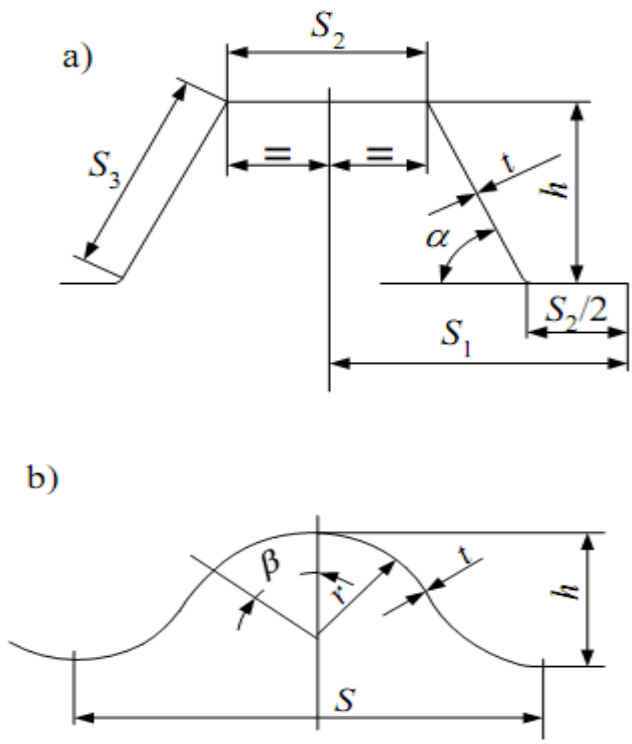

Figure 3.3.3 a) & b)

3.3. Details of Welded Structures. Arrangement of Welded Joints and Connecting Welds of Plating and Webs and Face Plates of Girders

3.3.1. Local concentration of welds, crossing of welds at an acute angle, as well as close location of parallel butts or fillet welds and parallel butt welds shall be avoided. Distances between parallel welded joints, irrespective of their direction, shall not be less than – 150 mm between butt welds, – 100 mm between a fillet weld and a butt weld,

The distance of joints (butts) of shell and deck plating panels from bulkheads, decks, inner bottom plating, girders, etc., arranged parallel to the joints, shall not be less than 75 mm.

For assembly joints (butts), this distance shall not be less than 150 mm. The distance between two butt welds of elements forming a T-joint may be selected freely. Fillet joints on the edge of scallop having a radius *r* = 30 mm situated over a butt joint in an element transverse to the scalloped one shall not be closer to the butt weld than 5 mm.

The angle between butt welds shall not be less than 60° (see Fig. 3.3.3). The butt weld shall be continued either in line or side-shifted by at least 100 mm.

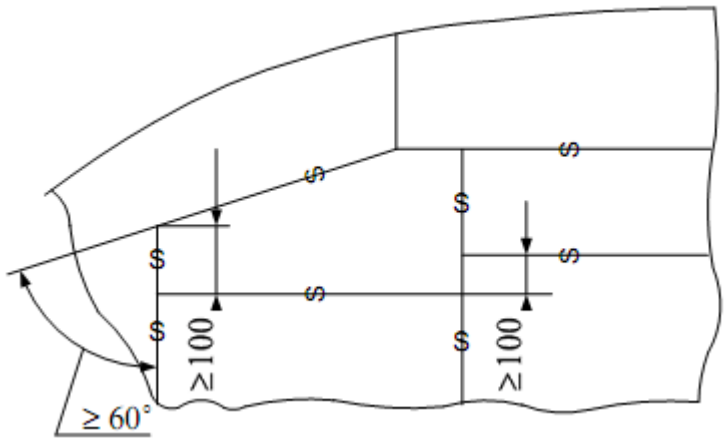

Figure 3.3.4: Arrangement of welded joints

3.3.2. Assembly joint (butt) of framing girder shall be shifted by at least 100 mm off the web butt.

Intersection of girder web butt and one face plate butt is permitted if at least one of the following conditions is fulfilled: – full penetration is applied in the web and face plate joint at the length not less than 100 mm in both directions from the intersection;

- an additional element
- extending in both directions from the intersection at least as long as the face plate width
- Is applied coplanar with the web of the other element (e.g. bracket).

3.3.3. Face plate joints of crossing girders subjected to dynamic loads and girders of strength decks and single bottom in the midship portion of the ship, as well as other highly loaded girders shall be made with smooth transition by means of diamond plates (see Figure. 3.3.4).

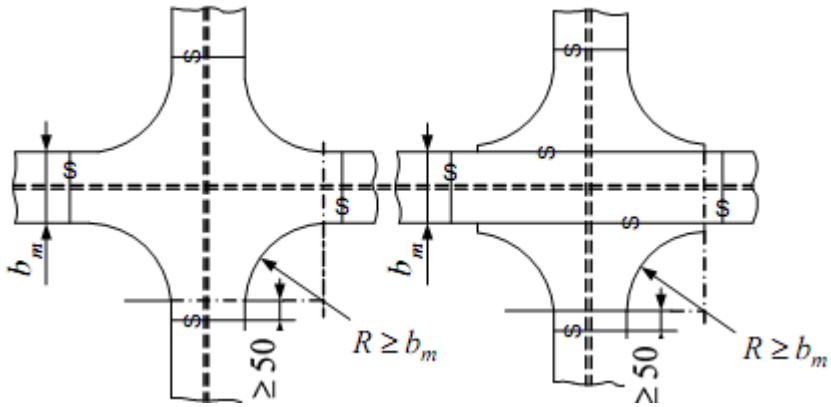

Figure 3.3.5 Joints of girder face plates

3.4. Structure Continuity

3.4.1. General Requirements

Any changes in the shape of sections and in the member thickness shall be smooth.

3.4.2. Continuity of Longitudinal Members

3.4.2.1. Continuity of as many as possible basic longitudinal members shall be ensured. All the necessary changes in the cross-section and/or their thickness shall be stepped smoothly so as to avoid excess stress concentration.

3.4.2.2. In watertight and non-watertight structures located in the areas where increased vibration may be expected, the applied design solutions shall prevent occurrence of sharp notches in the plating of shell, sides, bulkheads and decks as well as in way of transitions or ends of framing elements.

3.4.2.3. The areas where increased vibration may be expected, in terms of this Part of the Rules, are:

- In way of the afterbody:
  - Fore-and-aft – from the section at the distance (measured from the after edge of the stern tube) equal to half the propeller diameter to the section at the distance (measured forward) not less than twice the propeller diameter, however at least to the afterpeak bulkhead;
  - Vertically – from the keel to the closest continuous deck or platform above the propeller shaft;
- Machinery space: – fore-and-aft – between bulkheads forming the machinery space boundaries; – vertically – from the bottom to the deck;

- Positions where unbalanced machinery components or engines are installed.

3.5. Openings in Structural Members

3.5.1. General Requirements

3.5.1.1. The distance between edges of all openings in girder and edges of single slots in way of stiffeners shall be as little as practicable and shall have rounded corners.

Total height of openings (lightening holes, wash holes, single cut-outs in way of stiffeners and minor members, etc.) in one cross-section of a member shall not exceed 0.4 of its depth. In justified cases, this value may be increased in the centre of span to no more, however, than 0.6 of the member depth. In the outer parts of the member cross-section, the web cross-section decrement shall be compensated by connection lugs. The connection lugs shall have a thickness not less than 75% of the web plate thickness.

3.5.1.2. The distance between edges of all openings in girder and edges of single slots in way of stiffeners shall, in general, not be less than the depth of these stiffeners.

3.5.1.3. Holes in webs of stiffeners and girders shall not be arranged at a distance less than the web depth from the toe of end bracket.

3.5.1.4. Openings in member webs for free flow of liquid to the sucking terminals and for free flow of air to the air pipes shall be arranged inside the tanks.

These openings shall be as close to the bottom and deck as practicable. It is recommended that openings in bottom and deck longitudinals be elliptical or oval and located at a distance 10÷15 mm from the bottom and deck plating not less than 20 mm.

The height of the cuts extending to the plating as well as openings not extending to the plating shall not be greater than 0.25 of the web height and shall not exceed 75 mm. The length of openings and cuts along the plating shall not be greater than 15 times the member thickness and shall not exceed 150 mm.

3.5.1.5. Corners of any openings in members shall be rounded to a radius of curvature not less than twice the plate thickness.

3.5.1.6. Openings in side shell, longitudinal bulkheads and longitudinal girders shall be located below the strength deck or termination of rounded deck corners at a distance not less than twice the opening breadth.

3.5.1.7. Small openings shall generally be kept well clear of other openings in longitudinal strength members. Unreinforced edges of small openings shall be located at a

transverse distance not less than four times the opening breadth from the edge of any other opening.

3.5.1.8. Openings in longitudinals shall be of elliptical shape and shall be kept clear of the connecting welds on these longitudinals.

3.5.2. Reinforcement of Openings' Edges

3.5.2.1. The requirements specified below apply to openings in strength deck and outer bottom in the middle portion of ship's hull within $-0.3L_0 < x < 0.3L_0$

3.5.2.2. Circular openings with diameter greater than 0.325 m shall have edge reinforcement. Cross-sectional area of edge reinforcements shall not be less than:

$A_0 = 2.5dt$, [cm^2]

d – opening diameter, [m];

t – plate thickness, [mm].

3.5.2.3. Elliptical openings with breadth greater than 0.5 m shall have edge reinforcement if their length/breadth ratio is less than 2. The reinforcement shall be as required in 3.5.2.2 for circular openings where *d* shall be taken equal to the opening breadth.

3.5.2.4. Rectangular or approximately rectangular openings, other than hatch openings or machinery casings, shall have edge reinforcement in accordance with 3.5.2.2 where *d* shall be taken equal to the opening breadth. Corners of such openings shall have a radius not less than that determined in accordance with the following formula:

$R = 0.05b$, [m]

however not less than 50 mm; *b* – breadth of opening, [m].

SECTION 4 WELD CONNECTIONS

Contents

4.1. General

4.1.1. The requirements concerning types and size of welds, welded joints and steel-aluminium joints are specified in this Chapter.

4.1.2. Irrespective of the requirements set forth in this Chapter, the requirements concerning welding materials, welding methods, welders qualifications, quality control of welds and protection against atmospheric effects during welding, specified in Part 2 – Materials and Welding, shall be fulfilled.

4.2. Types and Sizes of Welds

4.2.1. Butt Joints

4.2.1.1. Edges of butt-welded plates of equal thickness shall be prepared as shown in Figure 3.4.1. Preparation plate edges and welding procedure are subject to INTLREG approval in each particular case.

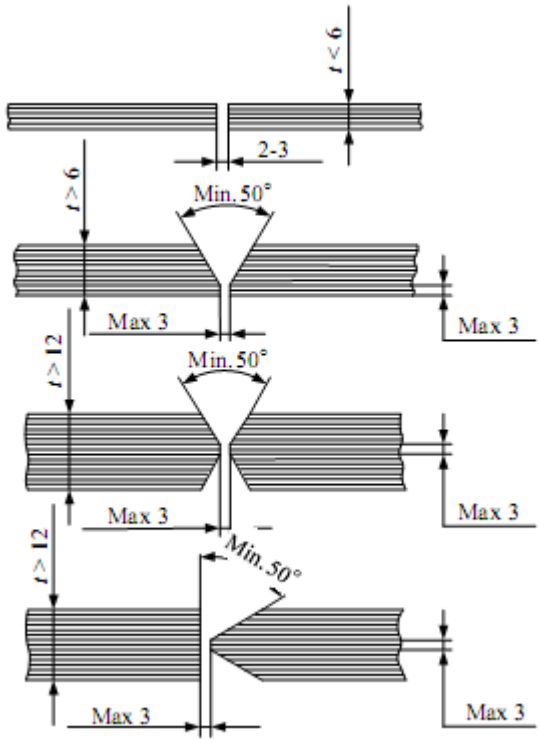

Figure 3.4.1: edge preparation for manual butt welding

4.2.1.2. Where two butt-welded plates are different in thickness by more than 3 mm, the thickness of the thicker plate shall be reduced by bevelling not exceeding 1:3. Upon reduction of the thickness, the edges shall be prepared for welding like the plates of equal thickness (see Fig. 3.4.2).

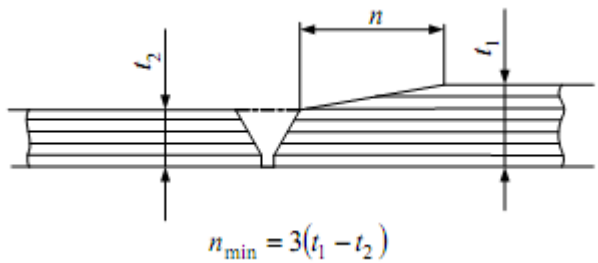

Figure 3.4.2: Edge preparation for welding plates of different thickness

4.2.1.3. All types of butt welds shall be, in general, double side welded joints. Prior to welding the other side, the weld root shall be cut out to clean metal. In the case of butt joints of steel elements, the use of one-side welding on a ceramic backing and in the case of aluminium-alloy elements – on the stainless steel backing is permitted. Subject to INTLREG consent in each particular case, one side welding may be used, for low loaded structures or the structures where sealing weld is impracticable.

4.2.2. Lap and Slot Welds

4.2.2.1. Lap Welds

Lap welds, as shown in Figure.3.4.3.a may be used for welding brackets to ends of stiffeners for joints exposed to moderate stress, except the areas where increased vibration may be expected, while lap welds, as shown in Fig. 3.4.3b – for welding thin divisions having 3÷4 mm in thickness to aprons.

Lap welds shall be made as continuous welds at the perimeter taking a = 0.4 – see 4.2.3.1. Lap breadth, *b*, shall not be less than that determined in accordance with the following formula:

$$b = 2t + 20, \text{ [mm]}$$

And not less than 30 mm, however it need not exceed 40 mm; *t* is the thinner element thickness, [mm].

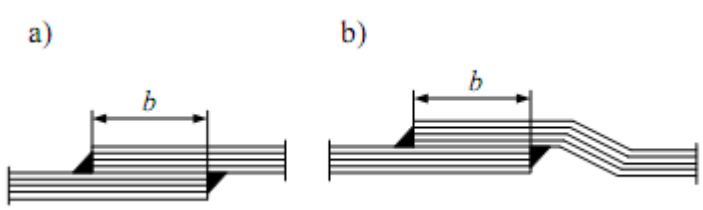

Figure 3.4.3: Lap welds

4.2.2.2. Slot weld

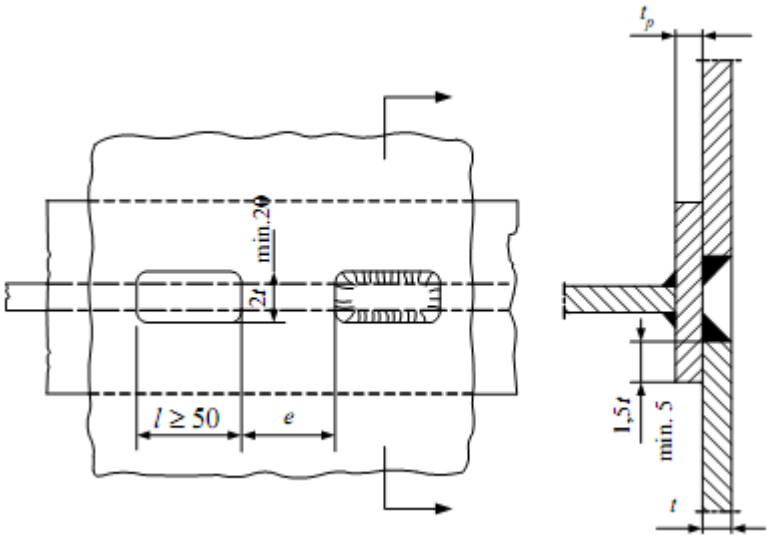

Figure 3.4.4: Slot weld

Slot welds (see Figure. 3.4.4) may be applied for joining the plating and inner stiffeners using a permanent backing where fillet welding from the structure interior is impracticable.

Backing thickness, t_p, shall not be less than t. Weld thickness $a = 0.7t$ (see 4.2.3.1) shall be applied.

Typical slot weld shall have the dimensions as follows:

- slot length: l = 75 mm,
- slot spacing: $p = l + e = 150$ mm,
- Slot rounding radius: $R \geq 10$ mm.

4.2.2.3. Pin Slot Welds

Conditions for the application of pin slot welds (see Figure 3.4.5), slot dimensions, spacing and radius R are the same as for a slot weld shown in Figure 3.4.4. The pin shall be welded around through the full plate thickness, and then the portion protruding above the plate shall be cut off.

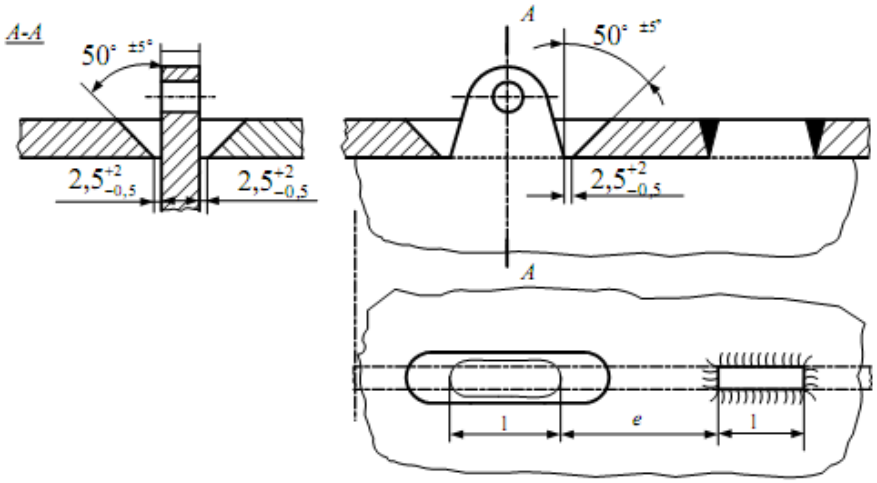

Figure 3.4.5: Pin slot weld

4.2.2.4. Slot Welding on Backing

Slot welding on backing may be applied for joining the plating and inner stiffeners where fillet welding from the structure interior is impracticable. In the areas where increased vibration may be expected, slot welding on backing shall be applied instead of regular slot welding or pin slot welding. Backing thickness shall fulfill the

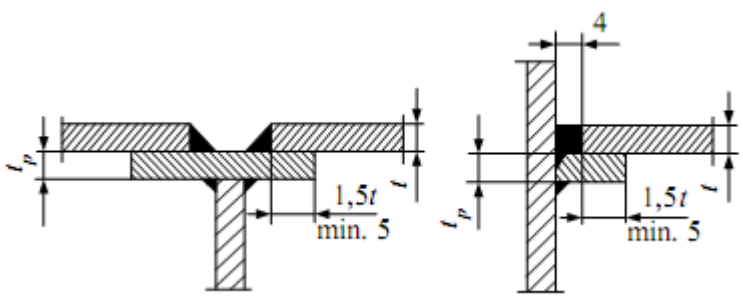

condition that $t_p \geq t$ (see Figure 3.4.6 and the weld shall have thickness $a \geq 0.7t$

Figure 3.4.6

4.2.3. Fillet Welds

4.2.3.1. Design thickness *a* of fillet welds (see Figure 3.4.7) made manually or using a semi-automatic procedure shall not be less than the value determined in accordance with the following formula:

$$a = \alpha\beta t$$

Where:

α – weld strength coefficient in accordance with Table 3.4.1;

β – coefficient determined in accordance with Table 3.4.2;

t – thinner component thickness, [mm].

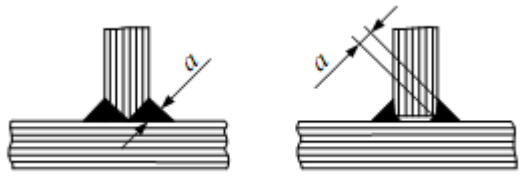

Fig. 3.4.7 Fillet weld thickness

Fillet weld thickness *a* shall not be less than:

2.0 mm for $t \leq 4.0$ mm,

2.5 mm for $4.0 < t \leq 6.5$ mm,

3.0 mm for $6.5 < t = 8.0$ mm,

3.5 mm for $8.0 < t \leq 15.0$ mm,

$0.25t$ for $t > 15$ mm.

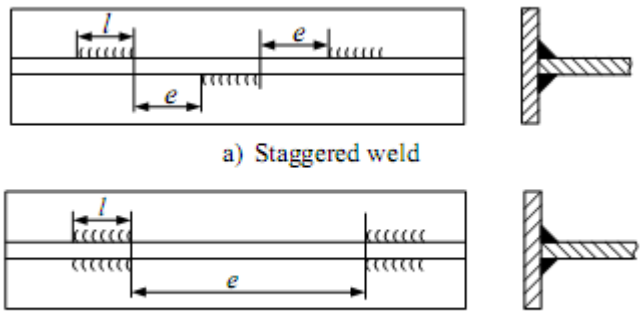

a) Staggered weld

b) Chain weld

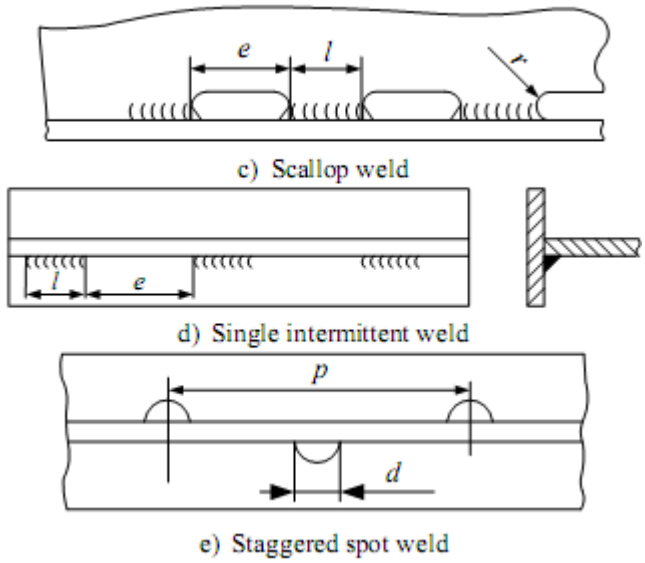

Figure 3.4.8: Types of fillet welds

Table 3.4.1: Coefficient α

Item	Connection definition	α
1	2	3
1	**Bottom structure**	
1.1	Central girder to keel plate	0.40
1.2	Central girder to bar keel	0.25
1.3	Floors to central girders under engines, thrust bearings and within 0.25L_0 aft of the fore perpendicular	0.35
1.4	Above specified joints in remaining areas	0.35
1.5	Floors and webs of side bottom stringers to the outer bottom plating under machinery and thrust bearings as well as after perpendicular	0.30
1.6	Above specified joints in the remaining areas	0.25
1.7	Watertight floors and parts of bottom girders forming boundaries of tanks, walls and bottoms of scupper wells to each other, to outer bottom plating, to floors and to side bottom stringers	0.30
1.8	Floors and webs of side bottom stringers to their face plates under engines and thrust bearings as well as after perpendicular	0.25

1.9	Above specified joints in remaining areas	0.40
2	**Side framing**	
2.1	Frames, web frames and side stringers to shell plating within 0.25 L_0 from the fore perpendicular, in tanks, in machinery space, in way of ice strengthening as well as in the area of side reinforcements in ships intended for mooring at sea	0.17
2.2	Above specified joints in the remaining areas	0.13
2.3	Frames, web frames and side stringers to their webs in the areas specified in 2.1	0.13
2.4	Above specified joints in the remaining areas	0.10
2.5	Frames, web frames and side stringers to shell plating in the after perpendicular	0.25
2.6	Above specified members to their webs	0.17
2.7	Side stringers to web frames	0.25
2.8	Tank side brackets to floor webs	0.30
2.9	Above specified elements to frames	0.25
3	**Deck and deck framing**	
3.1	Transverse and longitudinal deck girders to plating	0.17
3.2	Above specified members to their face plates	0.13
3.3	Webs of deck transverses to deck stringers and bulkheads	0.25
3.4	Deck beams and stiffeners in way of after peak tank and fore peak tank	0.15
3.5	Above specified joints in remaining areas	0.10
3.6	Stringer plate of strength deck to shell plating	0.45 [3]
3.7	Other decks and platforms to shell plating	0.35 [4]
3.8	Hatch coamings to deck at hatch corners	0.40 [3 4]
3.9	Above specified joints in remaining areas	0.35 [3,4]
3.10	Face bars of hatch coamings to coamings	0.25
3.11	Outer walls and bulkheads of superstructures and deckhouses to upper deck	0.35 [3 4]
3.12	Above specified elements to inner decks	0.30 [4]

3.13	Other walls and bulkheads of superstructures and deckhouses to deck	0.25
3.14	Pillars to webs of the following: floors, bottom girders, deck girders as well as pillars to decks and other members	0.35 [3]
3.15	Brackets of pillars	0.35
3.16	Bulwark stiffeners to bulwark plates	0.20
3.17	Bulwark stiffeners to bulwark rail	0.30
4	**Bulkheads and partitions**	
4.1	Collision bulkhead, after peak bulkhead, bulkheads forming boundaries of tanks – at the perimeter	0.30 [4]
4.2	Other watertight bulkheads to bottom plating	0.30 [4]
4.3	Above specified elements to ship sides and deck	0.25 [4]
4.4	Vertical and horizontal girders to plating of bulkheads and wash bulkheads – in peaks	0.30 [4]
4.5	Above specified joints in remaining areas	0.17
4.6	Elements specified above in 4.4. and 4.5 – to their flange plates	0.13
4.7	Bulkhead stiffeners to plating	0.15
4.8	Transverse bulkheads to longitudinal bulkheads	0.30 [4]
5	**Foundations of main machinery**	
5.1	Web plates of foundations to shell plating, tank top and deck	
5.2	Web plates of foundations to their face plates	
5.3	Foundation brackets to foundation web plates, outer plating, bottom and deck	
5.4	Brackets to their face plates	
6	**Other joints**	
6.1	Ends of girders within 0.15 of their span from the supporting points	0.25
6.2	Joints of members to structure webs on which they are cut	0.35 [3 4]
6.3	Brackets joining framing components together	0.35 [2]
6.4	Joints of regular stiffeners to member webs in way of stiffener supporting points by member webs	0.35 [4]

Note

[1] All joints of watertight structures shall be made with double continuous weld.

[2] Fillet welds joining flange plates of framing components to webs shall have, throughout the bracket arm length, thickness determined for $\alpha = 0.35$.

[3] Full penetration welds shall be used (see Figure 3.4.7).

[4] Double continuous welds are required.

[5] For main machinery foundations, full penetration welds shall be used (see Figure 3.4.7). Ship hull structure members under webs of foundation stiffeners, members and brackets shall be joined to bottom and decks with double continuous weld having thickness determined for *a* = 0.35.

Table 3.4.2

Item	Type of fillet weld	β
1	Double continuous weld	1.0
2	Staggered weld, chain weld and scallop weld	$\frac{l+e}{l}$
3	Single continuous weld	2.0
4	Single intermittent weld	$2.0(\frac{l+e}{l})$

e – gap between welds (see Figure 3.4.7 and 3.4.8);

l – weld length (see Figure 3.4.7 and 3.4.8);

p = *l* + *e* – weld pitch.

4.2.3.2. Intermittent welds (see Figure 3.4.7 and 3.4.8) may be used for less loaded joints – inside dry spaces. In tanks, continuous or scalloped double welds (see 4.2.3.5) shall be used.

4.2.3.3. Scallops shall be welded at the perimeter over length *l* (see Figure 3.4.7-e). Scallops in frames, the distance from scallops of frames, deck beams, stiffeners, etc. to the ends of these elements and supports (decks, longitudinal deck girders, longitudinal bulkhead girders) shall not be less than double depth of the stiffener section, and the distance to the bracket ends shall be at least equal to the value resulting from Figure 3.4.9.

4.2.3.4. Length of intermittent weld *l* (see Figure 3.4.7 and 3.4.8) shall not be less than 15*a*, however at least 50 mm. Distance *e* between the weld sections shall not exceed 25*t* or 150 mm whichever is lesser (*t* – thickness of the thinner element, [mm]). The depth

of scallops shall be in accordance with the requirements specified in 3.5.1.4, and the scallop length shall not exceed the weld length, i.e.

$e = l$ (see Figure 3.4.8-c).

4.2.3.5. Inside ballast, cargo or fresh water tanks, inside the spaces where water may be accumulated or condensed, as well as inside empty spaces exposed to corrosion (such as rudder blades), continuous welds shall be applied for heavy or dynamically loaded joints.

Double continuous welds are required:

- for watertight, oiltight and weathertight joints;
- within 0.25 L_0 from the fore perpendicular
- for welding structural members to the bottom plating;
- within ice belt of ships with ice strengthening;
- for welding side framing to the outer plating;
- in the area of pillars and at the ends of structural elements;
- in machinery foundation and supporting structures;
- for all joints in the after peak;
- for joints inside the rudder blade, except the cases where slot welding or pin slot welding is necessary;
- For connecting bottom central girder to the keel plate.

4.2.3.6. In heavy loaded joints, the plate edges shall be bevelled to ensure full penetration or deep fusion weld. The following joints shall be welded with full penetration:

- strength deck stringer to sheer strake,
- in way of machinery foundations (see Table 3.4.1),
- hatch coamings with deck at hatch corners,
- rudder horns and propeller shaft brackets to shell plating,
- Rudder blade plating to the flange connecting the rudder blade with rudder stock.

4.2.3.7. Structural elements and parts of members cut at the plating or at the crossing structures shall be coplanar. The maximum shift of the planes of interrupted structural elements and members (see Figure 3.4.9) shall not be greater than half the thickness of the thinner element, and for heavy loaded joints – not more than one third of the thinner element. Shift c shall not exceed that determined in Figure 3.4.9.

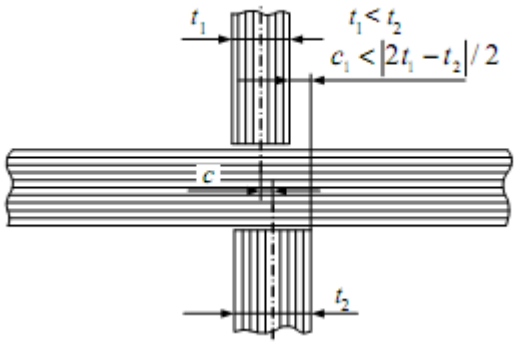

Figure 3.4.9: Shift of the planes of interrupted structural elements and members

If continuity of the members is achieved through their direct welding to the webs or plates of the structure on which they are interrupted, then the weld thickness shall be determined depending on the interrupted member thickness or welding shall be performed with the edge preparation.

4.2.3.8. Double continuous welds shall be used in the area of pillars, at ends of structural members and at the places where supporting members (transverse and longitudinal deck girders, floors, etc.) pass through structural members. The length of double continuous weld sections (see Figures 3.4.10 and 3.4.11) shall not be less than:

- Bracket length;
- Double depth of element
- Where brackets are not applied;
- Member depth on both sides of the intersection of members.

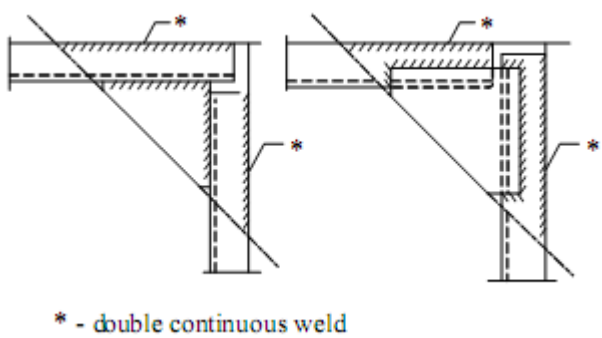

Figure 3.4.10: Minimum range of double continuous welding in way of bracket

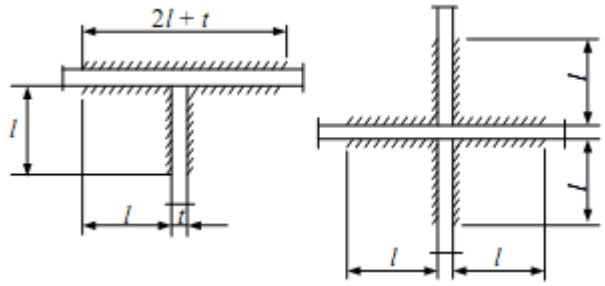

Figure 3.4.11: Minimum range of double continuous welding in way of intersection of members

4.2.3.9. Staggered spot welds, as well as single intermittent welds may be applied for joints in the second and higher tier of superstructures and deckhouses, as well as for elements in enclosed deck areas in the first tier of superstructures.

4.2.3.10. Where the thickness of section (plate) with extruded or corrugated stiffeners is less than 5 mm, spot welds may be used for joints in structures of casings and walls in these areas of hull, where neither variable nor impact loads nor strong corrosive agents occur.

4.2.3.11. Intermittent welds shall not be used:

- in the areas where increased vibration may be expected;
- for welding structural members to the bottom plating
- Within 0.25 L_0 from the fore perpendicular.

4.2.3.12. Single continuous welds shall not be used:

- within 0.20 L_0 from the fore perpendicular for welding side framing and within 0.25 L_0 from the fore perpendicular – for welding side framing to the bottom plating;
- in the areas where increased vibration may be expected;
- in joints subjected to high tensile and bending loads;
- In joints where the angle between the section web and plate differs from the right angle by more than 10°.

4.2.3.13. Scallop welding shall not be used:

- in the fore end of ship within 0.20 L_0 from the fore perpendicular for welding side framing and within 0.25 L_0 from the fore perpendicular – for welding bottom framing;
- for welding side framing and bottom framing members in way of ice belt as well as side framing in ships intended for mooring at sea to other ships or facilities;

- In the areas where increased vibration may be expected.

4.2.3.14. In way of cuts made to provide for air circulation or in way of penetration of sections or weld seams through non-watertight members, fillet welds shall be double welded having at least 50 mm in length in way of the cut edges.

4.2.3.15. For welding aluminium alloy components the following requirements shall be taken into account:

- intermittent welds shall not be used (except for scallop welding) in T-joints specified in Table 3.4.1;
- scallop welds shall not be used in the areas where increased vibration may be expected;
- Fillet weld thickness shall not be less than 2 mm and shall not exceed half the thickness of the thinner element.

4.3. End Connections of Structural Members

4.3.1. End connections of structural members shall be, in general, butt joints. Subject to INTLREG consent in each particular case, lap joints may be applied, except for:

- areas where increased vibration may be expected see Sec 3,[3.4.2.3];
- joints of web frames and girders;
- Areas subjected to great concentrated loads.

4.3.2. Stiffeners of any kind shall be terminated with brackets in accordance with the requirements specified in 13.9.2. In special cases, bracketless connection may be permitted (see 13.9.2.1).

4.3.3. Connections of plating stiffeners with coplanar structural members or brackets (e.g. connections of lower frame ends to bilge keels or single bottom floors) shall be arranged in accordance with one of the patterns shown in Figure 4.3.12. In double-skin structures (e.g. double bottom), bracket connection as shown in Fig. 4.3.13 shall be used.

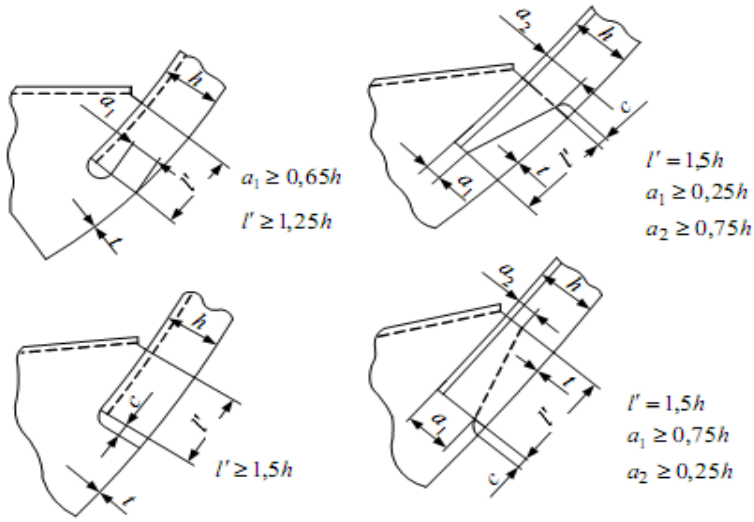

Figure 3.4.12: Connection of plating stiffener termination

Dimension *c* indicated in Figure 3.4.12 shall exceed neither 30 mm nor 5*t* (*t* – plating thickness).

The dimensions indicated in Figure 3.4.13 shall fulfill the following conditions: *c* ≥ =1.5h, however not less than 90 mm

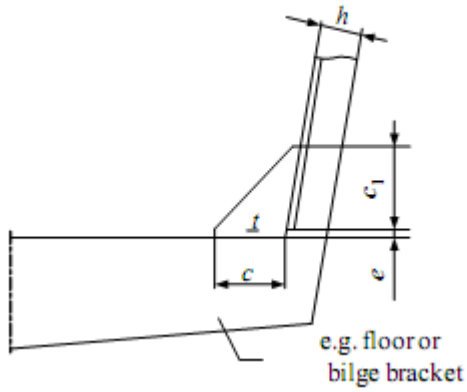

Figure 3.4.13: Connection of lower frame termination in ship with double bottom

4.3.4. Corners of the webs of frames, sections, brackets and divisions in non-watertight structures shall be cut as shown in Figure. 3.4.13

4.3.5. Depending upon the design of the detail, the ends of face plates and/or webs of the structural members shall be snipped at ends over a length equal to 1.5 times the face plate width or 1.5 times the web depth. The blunting at the snipped free end shall be as follows:

- for face plate
- equal to web thickness increased by 20 mm,

- For web – 10 ÷ 15 mm.

4.3.6. Connection of regular stiffeners to girder web plates where stiffeners are supported by girder shall be made with double continuous fillet weld having thickness determined in accordance with 4.2.3.1 for a = 0.35.

Recommended patterns of the above mentioned connections are shown in Figure 3.4.14.

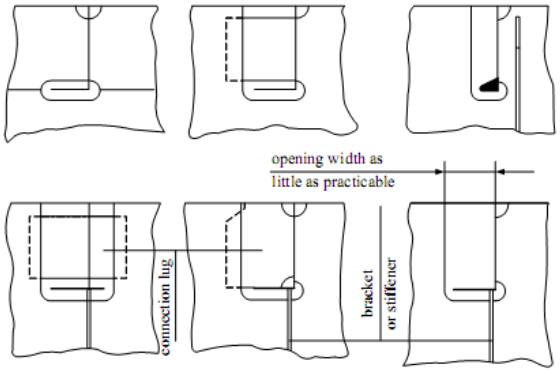

Figure 3.4.14: Connection of stiffener to girder web plate

4.4. Connection of Aluminium Alloy Structure and Steel Structure

4.4.1. Connections of aluminium-alloy structure with steel structure shall be made with a bimetal bar (steel-aluminium fastener) having a width not less than 24 mm, and for a tubular pillar – with a disk, square or rectangle with rounded corners to be mechanically cut from a bimetallic plate of a minimum diameter (width/length) equal to the pillar diameter (width/length) increased by 25 mm.

4.4.2. In the case of typical connection of an aluminium-alloy structure (superstructure, deckhouse, bulwark, windscreen, wave breaker, etc.) with connection lug put on the lower steel structure, an aluminium-alloy structure shall be fixed from outside with two rows of bolts or rivets to the vertical steel plate of 150 ÷ 200 mm in height.

4.4.3. To prevent galvanic corrosion, a non-hygroscopic insulant, non-metallic distance sleeves or stainless steel bolts (made of A4 steel grade, acc. to ISO, of a strength class not less than 70 – AISI type 316L) shall be used between steel and aluminium-alloy structures. The spacing of bolts or rivets shall not exceed their quadruple diameter.

SECTION 5 SHIP ACCELERATIONS

Contents

5.1. Application

5.1.1. The formula specified in this Chapter allow for calculation of the design vertical accelerations of ship hull to determine design loads due to liquid and solid cargoes.

5.2. Determining Coefficients *C*

5.2.1. Wave coefficient, C_w, shall be determined in accordance with the following formula:

$$C_w = 0.0792L_0$$

For service restricted ships, wave coefficient C_w may be reduced as follows:

- For operating area II by 10%
- For operating area III by 30%

5.2.2. Coefficient C_v shall be determined in accordance with the following formula:

$$C_v = 0.02\sqrt{L_0}$$

5.3. Resultant Vertical Acceleration

Resultant vertical acceleration, a_v, shall be determined in accordance with the following formula:

$a_v = \frac{k_v g a_0}{\delta}$, [m/s^2]

Where:

k_v – coefficient taking the following values:

$$k_v = 1.3 \; for \; x \leq 0.5L_0;$$

$$k_v = 0.7 \; for \; 0.3L_0 \leq x \leq 0.2L_0$$

$$k_v = 1.5 \; for \; x \geq 0.5L_0$$

In the intermediate positions of ship hull– $0.5L_0 \leq x \leq -0.3L_0$, and $0.2L_0 \leq x \leq 0.5L_0$, the value of K_v varies linearly(figure 3.5.1)

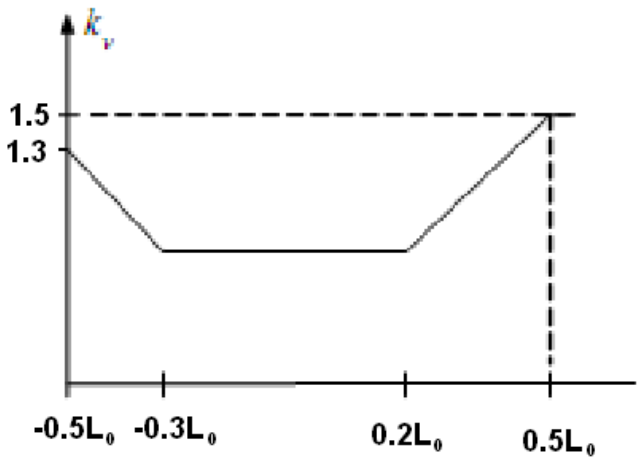

Figure 3.5.1: diagram of coeffecinet k_v

a_0 = general parameter of acceleration,[m/s^2], to be determined in accordance with formula 5.2.1;

C_v – coefficient determined in accordance with formula 5.2.2

SECTION 6 BOTTOM STRUCTURE

Contents

6.1. General

The requirements specified in this chapter apply to the single bottom structures with transverse stiffening. For single bottom with longitudinal stiffening or double bottom, the bottom structure is subject to INTLREG consideration in each particular case.

6.2. Structural Arrangement

6.2.1. Arrangement of Bottom Centre Girder

6.2.1.1. Bottom centre girder shall, in general, extend throughout the ship length. It shall extend fore and aft as far as practicable. It may be continuous or cut at floors.

6.2.1.2. In the machinery space, the bottom centre girder may be waived if the main engine foundation members extend from the fore bulkhead to the after bulkhead of the machinery space and these members are terminated with brackets.

6.2.1.3. Outside the bulkhead to which the bottom centre girder extends, such girder shall be terminated by a bracket having an arm length equal to double depth of this girder, however not less than double frame spacing.

6.2.1.4. The above requirement also applies to the termination of main engine foundation longitudinals.

6.2.2. Arrangement of Bottom Side Girders

6.2.2.1. Intercostal side girders shall be used if the distance between the bottom centre girder and the ship side exceeds 2.2 m.

6.2.2.2. In the forebody within $0.25L_0$ from the forward perpendicular, the spacing between longitudinals shall not exceed 1.1 m. Bottom side girders shall extend as far as practicable forward.

6.2.2.3. In justified cases, INTLREG may waive the requirement for bottom side girders.

6.2.3. Floors

Floors shall be used at each frame. Other design solutions (e.g. longitudinally stiffened bottom) are subject to INTLREG consideration in each particular case.

6.2.4. Manholes, Holes and Cut-outs

6.2.4.1. Maximum depth (diameter) of all holes (including lightening holes) in floors and girders shall not exceed half the depth of these members, and for the bottom centre girder – 0.4 of its depth in the relevant section.

6.2.4.2. Distance between edges of two adjacent holes shall not be less than half the breadth of the greater hole.

6.2.4.3. Dimensions of all the intended holes shall be indicated on the drawings submitted to INTLREG for consideration.

6.2.4.4. Holes shall not be cut in:

- bottom side girders and floors in the immediate vicinity of supports;
- bottom centre girder and in side girders in the immediate vicinity of bulkheads;
- floors in areas adjacent to the side girders and centre girder (the distance between the hole edge and members shall not be less than half the depth of the bottom centre girder, and in the wing
- it shall not be less than twice the depth of frame including the bracket);
- in floors
- in way of toes of transverse brackets supporting seatings of the main machinery.

6.2.4.5. Exceptionally, openings may be cut in the members mentioned in 6.2.2.4 if such members are reinforced by either by a flat bar welded on the whole perimeter or by a stiffener in the immediate vicinity of the hole.

6.2.4.6. Holes cut in floors shall not have a height (diameter) exceeding half the floor depth in the relevant section. The distance between the hole edge and the floor flange plate shall not be less than a quarter of the floor depth in the relevant section. The distance between the edges of adjacent holes shall not be less than the floor depth.

6.2.4.7. Floor plates in which holes are cut shall be reinforced by vertical stiffeners of a thickness not less than 0.8 times the floor thickness and width about 10 times the floor thickness. Other equivalent reinforcements of the structure are permitted.

6.2.4.8. In the floors, holes shall be provided for the carried liquid flow.

6.3. Scantlings of Structural Members

6.3.1. Plating

6.3.1.1. Bottom plating thickness in the midship portion, within $0.5L_0$ (i.e. in the interval: $-0.25L_0<x<0.25L_0$), shall not be less than that determined in accordance with 13.3.2 and 13.5.2, however not less than:

$$t_d = Ka\ (0.7 + 0.1\frac{\sqrt{LT}}{H}$$

Where:

$k = 10.5 + 0.1L_0$

, *a* – spacing of transverse members, [m], (see 13.2.2)

It is assumed that the bottom plating extends to the level located at distance *r* from the base plane (see Figure 3.6.1).

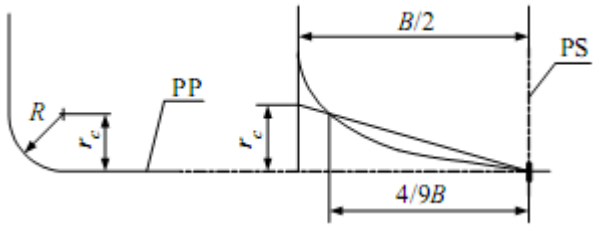

Figure 3.6.1: Determining bilge height Rc

6.3.1.2. Bottom plating thickness in restricted service ships may be reduced by 5% for operating area II and by 10% for operating area III. However, the minimum thicknesses specified in 12.3.2 remain in force.

6.3.1.3. Keel plate thickness within 0.15 L_0 from the after perpendicular may be lesser by 1 mm than that in the midship portion of the ship.

6.3.1.4. Breadth, *b*, of the sand strake (plating panel in the immediate vicinity of the bar keel) shall not be less than:

$$b = 300 + 2.5L_0$$

6.3.1.5. Sand strake thickness within $0.7L_0$ from the forward perpendicular shall be greater by 1 mm than the bottom plating thickness in the midship portion of the ship as determined in accordance with 6.3.1.1.

6.3.1.6. Bilge strake thickness (up to the top boundary of curvature as shown in Figure 3.6.1.) shall be taken equal to the bottom plating thickness.

6.3.1.7. Bottom plating thickness in the forebody and afterbody, within $0.25L_0$ from the forward and after perpendiculars, shall not be less that that determined in accordance with 13.3.2 and 13.5.2.

6.3.2. Bottom Centre Girder

6.3.2.1. Height of centre girder and attached plate floors shall not be less than that required for floors in the centre plane.

6.3.2.2. Thickness of the bottom centre girder plates in the midship portion of the ship, *t*, shall not be taken less than:

$$t = 0.06L_0 + 4.0, \text{ [mm]}$$

At the ship ends, within $0.1L_0$ from the perpendiculars, the bottom centre girder thickness may be less than that determined above by 2 mm.

6.3.2.3. Face plate of the bottom centre girder shall be connected to the face plates of floors where the bottom centre girder and the floors are of the same height (see Figure

3.3.4). Where the bottom centre girder is higher than the floors in the centre plane, proper design solutions shall be applied to ensure structural continuity of the floors' face plates.

6.3.2.4. Cross-sectional area of the bottom centre girder shall be at least twice the cross-sectional area of the floor face plate. The face plate thickness shall exceed the thickness of the bottom centre girder web by at least 2 mm.

6.3.2.5. The bottom centre girder web and its face plate shall be welded to bulkheads and vertical brackets with flange or face plate on their free edge shall be applied at bulkheads. The height of brackets shall not be less than half the bottom centre girder height.

6.3.2.6. If the face plate is not welded to the bulkhead, the bracket height shall not be less than the bottom centre girder height.

6.3.2.7. The bracket length shall not be less than the bottom centre girder height.

6.3.2.8. As an alternative to using brackets, the face plate of at least double width may be used in way of its contact with the bulkhead provided that a member which forms the face plate extension is behind such a bulkhead.

6.3.3. Bottom Side Girders

6.3.3.1. Plate thickness of single bottom side girders, *t*, in the midship portion of the ship shall not be less than:

$t = 0.05L_0 + 4.0$, [mm]

6.3.3.2. Thickness of bottom side girders within $0.1L_0$ from the perpendiculars may be less, by 1 mm, than that required in the midship portion of the ship.

6.3.3.3. Cross-sectional area of the bottom side girders shall not be less than that of the floor face plates.

6.3.3.4. Face plate thickness of the bottom side girders shall exceed the web thickness by 2 mm; however it need not exceed the floor face plate thickness.

6.3.3.5. Bottom side girder face plates shall be welded to the floor face plates.

6.3.3.6. Construction of the bottom side girders in way of their ends shall be the same as the construction of the bottom centre girder end. Holes and cuts shall be provided in the bottom side girders to enable flow of liquid carried in the tank.

6.3.3.7. Outside the portion of $0.25L_0$, from FP, bottom side girders made of T-bars or other sections laid on the floors and welded to the floor face plates are permitted. Cross-sectional area of such side girders, S, shall not be less than that determined in accordance with the following formula:

$= 0.7(B + 10)$, [mm^2]

6.3.3.8. Connections of the bottom side girders to transverse bulkheads shall be in accordance with the requirements specified in paragraph 4.3.2.1.

6.3.3.9. Rolled sections forming bottom side girders (laid on the floors) shall be welded to bulkheads using brackets having an arm length equal not less than depth of such rolled sections.

6.3.4. Floors

6.3.4.1. Floor height in the centre plane, h_d, shall not be less than:

$h_d = 0.055B_1$, [m]

B_1 – breadth of ship in the relevant cross-section at the floor face plate level, [m].

6.3.4.2. In the distance equal to 3/8 of breadth of ship B_1, measured from the centre plane, the floor depth shall be at least 50% of the depth required in the centre plane. In special cases, INTLREG may approve relaxations from this requirement provided that an adequate cross-sectional area is maintained taking account of the shear strength.

Within 0.05*B*, [m], from the ship sides, the floor web cross-sectional area, *A*, shall not be less than:

$A_1 = 0.1B_1(B + 7)$, [cm^2]

6.3.4.3. Where bilge brackets are applied, their cross-sectional area may be taken into account for determining area *A* in accordance with formula 6.3.4.2.

6.3.4.4. Floor thickness, *t*, shall not be less than:

$t = 0.02ah_d + 2$, [mm]

Where:

h_d – floor depth in the centre plane, [mm], (see 6.3.4.1);

a – floor spacing, [m], however it need not exceed the plate thickness.

6.3.4.5. Floor sectional modulus, *W*, shall not be less than:

$W = KaT_1B^2{}_1$, [cm^3]

$K = 7.0 - 0.2B_1$

a – floor spacing, [m]

T_1 – ship draught, however a value not less than 0.65*H* shall be taken for calculations, [m];

B_1 – see 4.3.2.3.

6.3.4.6. Cross-sectional area of the face plate of floor having thickness determined in accordance with formula 6.3.4.2 shall not be less than:

- In cargo spaces : $A = 3.5T$, [cm^2]
- Within machinery space : $A = 5.0\,T$, [cm^2]

6.3.4.7. Floor face plate thickness shall exceed its web thickness by 1 mm. The face plate thickness shall not be less than 50 mm.

In ships with a length L_0 < 10 m the floor face plate width of 40 mm is permitted.

6.3.4.8. Floor sectional modulus under the engine foundations shall be at least twice as great as that required in 6.3.4.5

6.3.4.9. If floors are interrupted on the bottom centre girder, their webs shall be welded to the bottom centre girder web.

6.3.4.10. Floor face plates shall be connected to the bottom centre girder face plate by means of the butt weld and the floor face plate width shall be doubled in way of its connection to the bottom centre girder face plate.

6.3.4.11. Floor face plate may be replaced by the flange provided the floor sectional modulus is increased by 5%; the flange shall be at least ten times as wide as the floor web thickness. Flanged floors shall not be applied in the machinery space and after peak.

6.3.4.12. In the cargo space, frames shall be connected to floors in accordance with the requirements specified in 4.3.3.

6.3.4.13. Scantlings and construction of floors in peaks shall fulfil the requirements specified in 6.4.2 and 6.4.3.

6.3.4.14. Watertight and oil tight floors forming tank boundaries shall have thickness not less than that determined in accordance with 13.5.2, where p and σ shall be taken like for tank bulkheads.

6.3.5. Double Bottom Tanks

6.3.5.1. Double bottom tanks are understood as tanks located on the outer bottom plating whose height is equal to, or slightly exceeds, the bottom centre girder height.

6.3.5.2. Double bottom tanks shall fulfill the following requirements:

- thickness of the tank top plating shall not be less than that determined in accordance with 13.3.5 and 13.5.2 (where p and σ shall be taken like for tank bulkheads), however, it need not exceed the shell plating thickness in the relevant portion of the ship;

- if a floor or bottom girder forms the tank boundary, its thickness shall fulfill the requirements specified in 6.3.4.14;
- On the double bottom tank boundaries having more than 600 mm in height and situated within 0.25L_0 aft of the forward perpendicular vertical stiffeners shall be used and their spacing shall not exceed 0.9 m. The stiffeners shall not have thickness less than 0.8 of the stiffened division thickness and their depth shall be around ten times the stiffener thickness.

6.3.6. Sea Chests

6.3.6.1. Thickness of floors and girders forming boundaries of the sea chest shall be greater, by 2 mm, than that required in 6.3.4.14, and the sea chest top plating thickness shall be greater, by 2 mm, than that required in 6.3.3.2.

6.3.6.2. In any case, the strength of the sea chest boundaries shall not be less than the local strength assumed for the outer plating arranged in the relevant portion of the ship.

6.3.6.3. Thickness of the sea chest boundaries shall also be greater, by 2 mm, than the minimum thickness required in 13.3.2 and 13.3.3 for the bottom or side shell plating.

6.3.7. Bilge Keel

6.3.7.1. Bilge keel shall be attached to the plating by an intermediate member (flat bar or angle bar). Weld connection of the bilge keel to the intermediate member shall have less strength than the member connection to the shell plating. The connection shall, however, be strong enough to maintain the bilge keel in normal service conditions which is particularly important where the bilge keel has been taken into account in the ship stability criterion check.

6.3.7.2. Bilge keel and the intermediate member shall be made of steel or aluminium alloy of the same yield point as the shell plating in way of the keel connection.

6.3.7.3. Bilge keel ends shall be smoothly rounded and shall be in line with inner supports of the hull – see Figure 3.6.2.

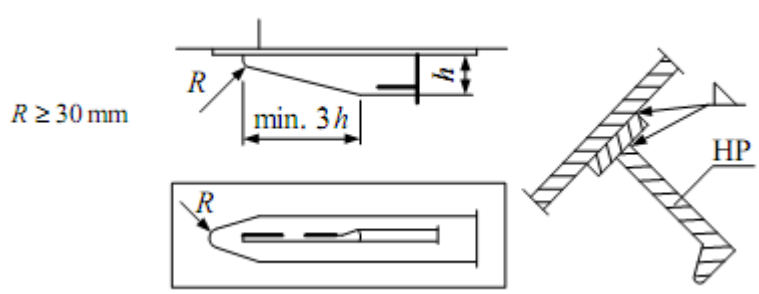

Figure 3.6.2: Bilge keel

6.4. Bottom Strengthening in Forebody and Afterbody

6.4.1. Strengthening Extent

Additional strengthening provisions shall be made in the forebody and afterbody in accordance with the requirements specified in sub-chapters 6.4.2 to 6.4.6.

6.4.2. Bottom Strengthening in Forebody

6.4.2.1. Bottom strengthening shall be provided within 0.25*L* from *FP* in ships with flat bottom. The difference in thickness between the adjacent plating panels shall not exceed 2 mm.

6.4.2.2. Slamming pressure value, p_u, used to determine the bottom thickness (in accordance with 6.4.2.3) as well as the sectional modulus and cross-sectional area of the bottom stiffener webs (in accordance with 6.4.2.4 and 6.4.2.5) shall be calculated in accordance with the following formula:

$$p_u = 3.45L_0, \text{ [kPa]}$$

The above formula applies to the bottom forward portion within $0.25L_0$from *FP* to the level of $z = 0.004L_0$ for the ship draught of $T > 0.025L_0$ at *FP*. For the ship draughtding $0.025L_0$ at *FP*, the value of p_u for the above mentioned portion of the bottom shall be taken in accordance with Table 3.6.1.

Table 3.6.1: Values of p_u for $T \leq 0.025L_0$

T	$\leq 0.015L_0$	$0.0175L_0$	$0.020L_0$	$0.0225L_0$	$0.025L_0$
p_u, [kPa]	$7.5L_0$	$5.90L_0$	$4.90L_0$	$3.90L_0$	$3.45L_0$

For intermediate values of *T*, pressure p_u shall be determined by linear interpolation.

6.4.2.3. Bottom plating thickness in the region defined in 6.4.2.1 and 6.4.2.2 shall not be less than the value determined in accordance with the following formula:

$$t_M = 15.8akk_1\sqrt{\frac{p_u}{\sigma}} + C + t_k, \text{ [mm]}$$

k_1 – plating thickness reduction coefficient considering the plating panel sides' ratio ratio b/a to be determined in accordance with the following formula

$$k_1 = -0.22\left(\frac{b}{a}\right)^2 + 0.87\frac{b}{a} + 0.14$$

k_r – coefficient considering the curvature of plating panels (convex outside; for

concave plating panels k_r = 1 shall be taken

$$k_r = (1 - 0.5\frac{s}{r})$$

r – plating panel curvature radius, [m];

s – Spacing between stiffening measured along the plating, [m];

p_u – slamming pressure, determined in accordance with 5.4.2.2, [kPa];

a – length of the shorter side of bottom plating panel, [m];

b – Length of the longer side of bottom plating panel, [m];

σ = 160k [MPa] – allowable stress;

C = 1.25 [mm] – for $L_0 \leq 15.0$ m,

C = 1.7 [mm] – for 15.0m < $L_0 \leq 24.0$ m

In the ship portion of $x < 0.25L_0$, the thickness of bottom plating panels shall be gradually reduced to the values required in 6.3.1.1 taking account of the limitation specified in 6.4.2.1.

6.4.2.4. Sectional modulus of additional bottom longitudinal members and plate floors which may be applied in the region defined in 6.4.2.1 shall not be less than:

$$W = \frac{1000a_1p_ul^2}{m\sigma}$$

Where:

a_1 – spacing of additional bottom longitudinal members and plate floors, [m];

l – span of additional bottom longitudinal members (spacing of floors or taken in accordance with the requirements specified in 3.2.1.1), [m];

p_u – slamming pressure, determined in accordance with 5.4.2.2, [kPa];

σ = 190*k*, [MPa] – allowable stress;

m = 11.8 – for uninterrupted bottom longitudinal members penetrating floors or longitudinal members interrupted at floors without brackets installed,

m = 22.5 – for longitudinal members interrupted at floors with their ends connected to floors with brackets having an arm length not less than 1.5 their web height,

m = 6.3 – to determine sectional modulus connecting interrupted longitudinal member to the floor.

6.4.2.5. Cross-sectional area of the additional bottom longitudinal member or cross-sectional area of the welds connecting interrupted longitudinal members to the floor shall not be less than:

$= \frac{lp_u a_1 K_A}{\tau}$, [cm^2]

K_A = 6.1 – for uninterrupted bottom longitudinal members penetrating floors or longitudinal members interrupted at floors without brackets installed;

K_A = 4.7 – for uninterrupted bottom longitudinal members penetrating floors or longitudinal members interrupted at floors but in both cases having their ends connected to floors with brackets having an arm length not less than 1.5 time the member section height;

$\tau = 110k$, [Mpa]- allowable shear stress;

a_1, p_u, l – see 6.4.2.4

6.4.2.6. Floor height, h_{dd}, in the fore peak shall not be less than:

$$h_{dd} = 1.5h_d$$

h_d – prescribed floor height in the centre plane amidships, [m].

6.4.2.7. Floor web thickness within 0.25L_0 from *FP* shall not be less than the amidship thickness of floors having the prescribed height, however not less than 4.0 mm.

6.4.2.8. Floor face plate thickness in the hull portion defined in 6.4.2.7 shall not be less than the floor thickness and width – not less than their tenfold thickness, however not less than 50 mm.

6.4.2.9. Flanged floors shall not be applied in the fore peak.

6.4.2.10. In the fore peak, an intercostal girder with face plate shall be applied in the centre plane to form an extension of the bottom centre girder.

6.4.2.11. Height and thickness of the bottom girder web in the centre plane as well as thickness and width of its face plate shall be such as determined in paragraphs 6.4.2.7 to 6.4.2.9 for floors.

6.4.2.12. Where application of the bottom centre girder in the fore peak is impossible, floor face plates shall be connected together in the centre plane with angle bar, or T-bar or another section having a flange of width and thickness not less than the scantlings of floor face plates required in 6.4.2.8.

6.4.3. After Peak

6.4.3.1. Floor spacing in the after peak shall fulfill the requirements specified in paragraphs 13.2.2.3 and 13.2.2.4.

6.4.3.2. Floor height shall fulfill the requirements specified in paragraph 6.4.2.6. In single-screw ships, the top edges of floors shall be at least 0.6 m above the stern tube. Floors shall have face plates in the after peak.

Openings in floors for the penetration by stern tube shall be reinforced by a flat bar welded on the whole circumference. Openings in floors under the stern tube shall be reinforced by a flat bar welded on the whole circumference or the floor shall be reinforced by stiffeners welded on in way of such an opening.

6.4.4. Stern Counter Reinforcements

6.4.4.1. Floors shall have sufficient height determined in accordance with the requirements specified in paragraphs 6.3.2.3., where B_1 represents the breadth of ship in the relevant frame section at the floor face plate level. In the centre plane, an intercostal girder of the height equal to the floor height shall be applied.

6.4.4.2. Thickness of floors and the centre plane girder shall not be less than the floor thickness determined in accordance with the requirements specified in 6.3.2.3.

6.4.5. Afterbody Reinforcements

Plating panels adjacent to the stern tube as well as panels in way of fixing propeller bracket arms shall have a thickness not less than:

$t = 0.1L_0 + 4.0$, [mm]

With the prescribed spacing of structural members in the afterbody in accordance with the requirements specified in paragraphs 13.2.2.1 to 13.2.2.4. Plating inserts having increased thickness in way of the brackets shall extend:

- for at least double bracket thickness, however not less than 200 mm beyond each side of the bracket – transversely;
- For half the bracket length, however not less than 300 mm fore and aft of the bracket – longitudinally.

6.4.6. Bottom Reinforcements in Machinery Spaces

6.4.6.1. Thickness of floors and bottom side girders in machinery spaces shall not be less than the required thickness of the bottom centre girder specified in 6.3.2.1. If a bottom side girder also forms the engine foundation web, then its thickness shall not be less than that required in 12.2.1.3.

6.4.6.2. Floor height shall be increased with respect to the construction of foundations for engines and machinery (see Figure 3.6.3). Floor web height between the foundation longitudinal members shall not be less than 0.65 the height required in the centre plane and the floor sectional modulus shall not be less than that required in 6.3.2.3increased by 10%.

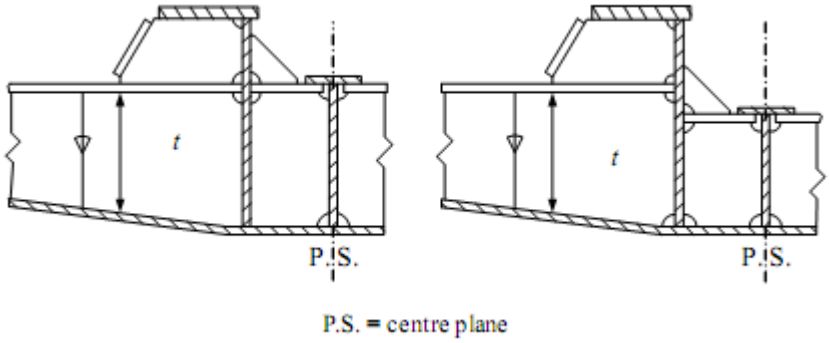

Figure 3.6.3: Floors in way of foundations in machinery space

SECTION 7 SIDE STRUCTURES

Contents

7.1. Openings in Side Shell

7.1.1. Openings in sheer strake shall be avoided in the midship portion of $0.5L_0$ in length (i.e. the interval: $-0.25L_0<x<0.25L_0$).

7.1.2. Where necessary, openings may be arranged in sheer strake for side scuttles or for other purposes. The centre of such an opening shall be situated at a distance (measured from the top edge of the sheer strake or from the centres of other openings) equal to at least double diameter of such an opening and not less than the diameter of the larger diameter out of the adjacent openings. If the diameter of round openings in the sheer strake exceeds 20 times the sheer strake thickness, then such a opening shall be reinforced with horizontal stiffeners above and below it. Cross-sectional area of such stiffeners shall not be less than:

$A = 0.7rt_1$, [cm^2]

Where: r – opening radius, [cm];

t_1 – sheer strake thickness, [cm]

7.1.3. Where the required width of the area for an opening exceeds the frame spacing, such an opening shall also be reinforced by vertical stiffeners having cross-sectional area as required in 7.1.2.

7.1.4. Horizontal reinforcements of the opening shall extend from its centre in both directions for a distance not less than the opening diameter and shall be welded to the closest frames.

7.1.5. Openings located below the sheer strake (e.g. openings for valves) shall have rounded corners and shall possibly not be situated in way of the curvature.

7.1.6. Corners of the openings mentioned in 7.1.5 shall have a radius not less than 50 mm. Construction of such openings is subject to INTLREG consent in each particular case.

7.2. Structural Arrangement

7.2.1. Fixing of Frame Ends and Span of Frames

7.2.1.1. Main frames shall be connected to floors in accordance with the requirements specified in 4.3.3. If lower bracket is applied, its height shall not be less than $0.1l$;

l – Frame span.

7.2.1.2. Main frames shall be connected to deck beams in accordance with the requirements specified in Section 13, [13.9.2.] The frame upper bracket shall have a height not less than $0.07l$; l – frame span.

7.2.1.3. Upper ends of the ‘tween deck frames, poop frames and forecastle frames shall be connected to deck beams with brackets in accordance with the requirements specified in Section 13, [13.9.2].

7.2.1.4. Fixing of frame lower ends in poop and forecastle with anti-sweat flat bars having not less than 80 mm in width welded to the frame flanges and to the deck is permitted.

7.2.1.5. Main frame span and superstructure frame span necessary to calculate the required frame sectional modulus in accordance with Section 13, [13.6.1] shall be determined in accordance with Figure 3.7.1.

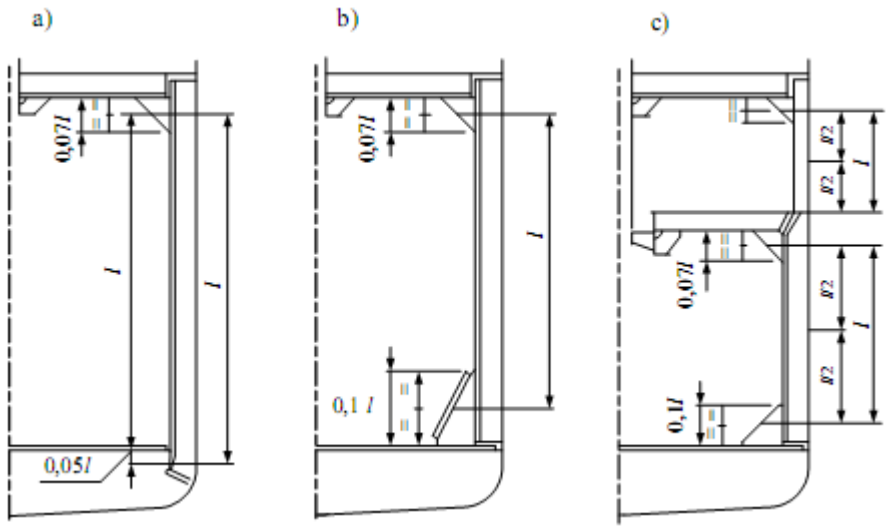

Figure 3.7.1: Frame span determination

7.3. Scantlings of Structural Members

7.3.1. Plating

7.3.1.1. Side plating thickness shall not be less than what is required by:

$$K = 10.0 + 0.08L_0$$

The value of design pressure *p* required in Section 13, [13.5.2] shall be determined for the load application point in accordance with the requirements specified in Chapter 14.

7.3.1.2. Side shell plating thickness in restricted service ships may be reduced:

- By 5% for operating area **II**,
- By 10% for operating area **III**.

7.3.2. Sheer Strake

7.3.2.1. Sheer strake thickness shall not be less than that of side shell plating whereas its breadth shall not be less than 0.1H, however not less than 0.3 m.

7.3.2.2. Rounded gunwale is permitted and the rounding radius shall not be less than 15-fold sheer strake thickness.

7.3.3. Frames

7.3.3.1. Possibilities for application of a different spacing than the ones required by the rules will be considered separately.

7.3.3.2. Sectional modulus of main frames (also in peaks) shall not be less than that determined in accordance with various design pressures and allowable stresses specified as items 1.1, 1.2 and 1.3 in Table 3.13.1.

Bending moment factor m = 10 and the value of l not less than 2.2 m shall be taken.

The value taken for calculations shall not be less than 15 kPa.

The value of design pressure may be reduced:

- By 5% – for operating area II,
- By 10% – for operating area III.

7.3.3.3. The applied main frame sectional modulus shall not be less than that of the ‘tween deck frame situated above the main frame on the main deck.

7.3.3.4. Side frames supporting the hatch end beams or deck cantilevers (for longitudinally framed decks) shall be reinforced.

7.3.3.5. Sectional modulus of side frames in ‘tween deck shall not be less than the value determined in accordance with the prescribed rules for the load patterns and allowable stresses specified as items 1.4 and 1.5 in Table 3.13.1 where m = 10 and l ≥ 2.2 m shall be taken for calculations.

The method for determination of the design stresses and their reduction for restricted service ships is the same as in 7.3.3.2.

7.3.3.6. Sectional modulus of side frames in ‘tween deck below the upper deck in way of the poop and forecastle shall be increased by at least 15% against the value obtained in accordance with the requirements specified in 7.3.3.5.

Sectional modulus of side frames in superstructures (including the poop and forecastle) shall be determined in accordance with the requirements specified in 7.3.3.5, except for the allowable stresses whose values shall be taken in accordance with item 1.6 in Table 3.13.1.

7.3.4. Side Stringers

7.3.4.1. Where the frame span exceeds 2.5 m, it is recommended that side stringer be applied. In that case the strength of side stringer, web frames supporting such stringers and ordinary frames shall be checked by direct calculations in accordance with the requirements specified in Section 13, [13.7.]

7.3.4.2. At the level of fore peak stringers, intercostal side stringers shall be applied as their aftward extension over the stretch of 3 frame spacings. Such stringers shall be made

of the same section as the frames. Flanges of the side stringers shall have cut ends and shall not be welded to the frame flanges.

7.3.5. Stern Counter

In the stern counter, sectional modulus of the frames shall not be less than that of frames in the after peak.

Spacing between ordinary frames or after frames shall, in general, fulfill the requirements specified in the rules. If the spacing is greater than the prescribed spacing in accordance with the rules but it fulfills the requirements specified in the rules, then the side shell plating thickness shall be increased in accordance with the rules.

7.4. After body Reinforcements

In multi-propeller ships, sides shall be reinforced by means of the local increase in the side frames, application of intercostal stringers, brackets etc. in way of stern tube fixing and propeller brackets' fixing.

7.5. Reinforcements in Machinery Space

7.5.1. Within the machinery space at least 2 web frames shall be applied where rated power of the main engine installed exceeds 150 kW. Web frames shall be situated in way of both fore and after ends of the main engine foundation. Subject to INTLREG consent in each particular case, ordinary frames having an increased sectional modulus may be applied instead of web frames.

7.5.2. Web frames shall have thickness, h_{WR}, not less than:

$$h_{WR} = 0.1l$$

And web thickness, t_s, not less than:

$$t_s = 0.01h_{WR} + 2$$

It need not, however, exceed the side shell plating thickness in this region;

l – Frame span in accordance with 7.2.1.5.

7.5.3. Web frame flange thickness shall exceed its web thickness by at least 2 mm. The flange width shall be equal to 10÷15 times the web thickness.

7.5.4. In the web frame plane, deck girders having not less than half the web frame depth shall be provided.

7.5.5. Web frames need not be applied where rated power of the main engine installed is less than 150 kW. In that case, frame sectional modulus within the machinery space shall be increased by 15% against that required in 7.3.3.

7.5.6. Within ballast deep tanks and fuel tanks, the sectional modulus of frames shall be increased by 15% compared to that required in 7.3.3.

SECTION 8 DECK STRUCTURE

Contents

8.1. General

The requirements specified in this chapter apply to transversely stiffened decks. Structural arrangement of longitudinally stiffened decks is subject to INTLREG consideration in each particular case.

8.2. Structural Arrangement

8.2.1. Connection of Deck Stringers to Bulkheads

8.2.1.1. Deck stringer webs shall be welded to transverse bulkheads. Furthermore, deck stringers shall be connected to stiffeners or structural members of bulkheads with brackets fitted with face plate or flanged on the free edge.

8.2.1.2. Bracket thickness shall be equal to that of the deck stringer web. Deck stringer bracket height and its length measured along the stringer shall not be less than the stringer height.

8.2.2. Connection of Deck Beams to Frames and Deck Girders

8.2.2.1. Deck beams shall be connected to frames with brackets in accordance with the requirements specified in the rules.

8.2.2.2. The bracket thickness shall not be less than 0.8 the beam web thickness.

8.2.2.3. If deck beams run through cuts in the deck girder, then the beam webs shall be connected to the edge of the deck girder cut with double weld or on the deck girder web either stiffeners or brackets shall be used to support such girders.

8.2.2.4. If deck beams are cut at the deck girder, then the beams shall be connected to the girder with brackets welded to the girder web. Width of the brackets measured along the deck beam shall be determined in accordance with the requirements specified in 13.9.2.

8.2.2.5. Bracket ends shall be led to the deck girder face plate.

8.2.2.6. If the deck girder height is less than 2.2 the deck beam height, then the beams cut at the girder shall be welded to the girder web, and the brackets – to the girder web and face plate. If the deck girder height is more than 2.2 the deck beam height, then the beams cut at the girder need not be welded to the girder web and the brackets will suffice.

8.2.2.7. Transverse girder web shall be welded to the frame. Furthermore, the transverse girder shall be connected to the frame with bracket. The bracket construction and dimensions shall be in accordance with the requirements specified in sub-chapter 13.9.2.

8.3. Scantlings of Structural Members

8.3.1. Plating

8.3.1.1. Plating shall, in general, be continuous throughout the deck. Deck break, however, is permitted in accordance with the requirements specified in Section 8, [8.4.1] 7.4.1.

8.3.1.2. Thickness of the upper deck plating panels in the midship portion of the ship, *t* , shall not be less than the value obtained in accordance with the following formula:

$t = a(0.2L_0 + 6.0)$, [mm]

Where:

L_0 – design length of ship, [m]; *a* – beam spacing, [m]; however not less than the thickness determined in accordance with Section 13,[13.5.2], where pressure *p* shall be determined in accordance the requirements specified in the rules, and allowable stress *s* shall be taken from the given data. The requirements for stringer plates are specified in Section 8, [8.8].

8.3.1.3. Deck plating thickness shall not be less than the minimum thickness specified in Section 13, [13.3].

8.3.2. Stiffeners

8.3.2.1. Sectional modulus of beams and deck stiffeners, W, shall not be less than the value obtained in accordance with the following formula (see also 13.6.1):

$W = \frac{1000apl^2}{m\sigma} w_k$, [cm^3]

m – bending moment factor taking the following values:

14.2 – single-span of two-span open deck beam, both outer ends fixed with bracket, as well as two- or three-span beam of a superstructure deck fixed with bracket at outer ends and supported on pillars;

12.3 – two-span beam in the superstructure: fixed with bracket at outer ends continuously running on the supports or welded to them;

12.3 – three-span beam in the superstructure: fixed with bracket at outer ends continuously running on the supports or welded to them;

11.2 – short ($l \leq 0.25B_1$) single-span beam in the superstructure fixed with bracket at outer ends;

9.8 – short ($l \leq 0.33B_1$) beam with both ends running on the supports or welded to them;

8.8 – short ($l \leq 0.25B_1$) single-span beam with both ends welded;

7.5 – short stiffener, boosting the deck stiffness locally between beams with neither end fixed (cut);

σ – allowable stress in accordance with the rules;

a – spacing of beams and stiffeners, [m];

p – design load in accordance with the diary, [kPa];

l – span determined in accordance with the requirements specified in 3.2.1, [m];

for transversely framed system, the span taken for calculations shall not be less than 0.25 the breadth of ship in the relevant section, except for short stiffeners boosting the deck stiffness locally between beams;

w_k – corrosion addition factor;

B_1 – breadth of deck in the relevant beam position, [m].

The applied value of the beam sectional modulus shall not be less than 7 cm^3

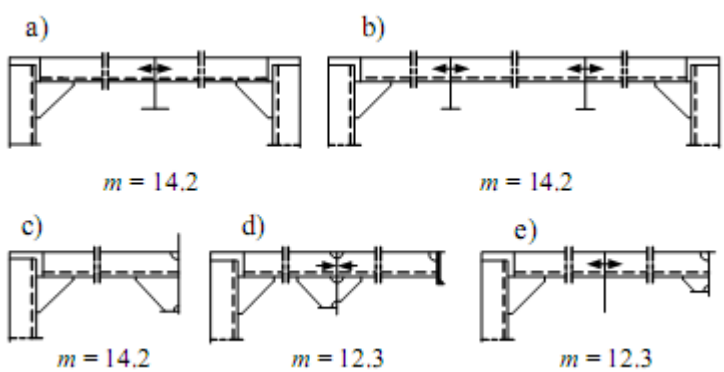

Figure 8.3.1: Beam bending moment factors

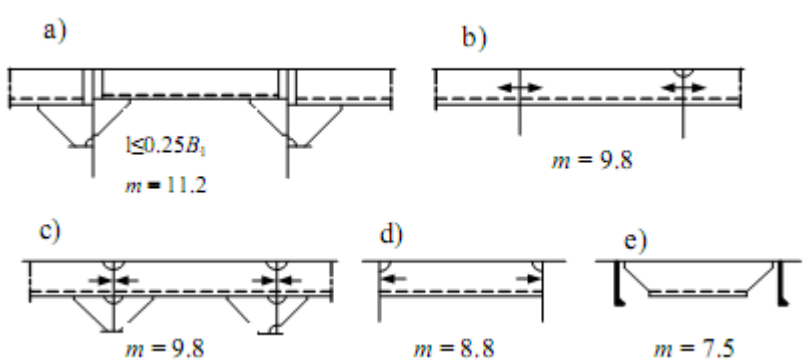

Figure 8.3.1: Beam and stiffener bending moment factors

The requirements regarding stringer plates are specified in Section 8,[8.7.]

8.3.3. Longitudinal Deck Girders

8.3.3.1. Longitudinal deck girder sectional modulus, *W*, shall not be less than the value determined in accordance with the following formula:

$$W = n\,\frac{1000bpl^2}{m\sigma}$$

where:

b – mean breadth of deck portion supported by longitudinal deck girder including hatches in the relevant portion of the ship, [m];

l – longitudinal deck girder span measured between their support points (centres of pillars, bulkheads, hatch-end beams), [m];

p – design load in accordance with the rules, [kPa];

n – factor taking the following values:

n = 1.55 – for open deck (which may be a cargo deck) and forecastle deck longitudinal girders within $0.2L_0$ from *FP*;

n = 1.18 – for open deck longitudinal girders within the portion aft of $0.2L_0$ from *FP*, for pressure *p* determined in accordance with the rules;

n = 1.1 – for longitudinal coaming of ‘tween deck which forms longitudinal deck girder;

n = 1 – for longitudinal girders of open deck being a cargo deck within the portion aft of $0.2L_0$ from *FP*, and for longitudinal girders of other decks, for pressure *p* determined in accordance with the rules;

σ – allowable stress taking the following values:

σ = 140*k*, [MPa] – in the midship portion;

σ = 160*k*, [MPa] – in peaks; for intermediate portions between the midship portion and peaks, the values of σ shall be determined by linear interpolation;

m = 10.5 – bending moment factor;

w_k – corrosion addition factor determined in accordance with the requirements specified in Section 13,[13.6.1.]

If in line of the longitudinal deck girder a pillar is applied (placed on that girder), the design load shall be increased by the following value:

$\Delta p = \frac{8cd}{l^2}\frac{N}{lb}$, [kPa]

where: *N* – girder load induced by the pillar placed on it, [kN];

c – distance between the pillar and the closer support of girder;

d – distance between the pillar and the further support of girder.

8.3.3.2. Longitudinal deck girder web height shall not be less than 0.04 of its span.

8.3.3.3. Longitudinal deck girder web height shall not be less than the value obtained in accordance with the following formula:

$t = 0.01h + 3$, [mm]

However, it need not exceed the deck plating thickness in that region; *h* is the web height, [mm].

8.3.3.4. Longitudinal deck girder face plate height shall not exceed the triple web thickness.

8.3.3.5. Total width of longitudinal deck girder face plate shall not be less than its tenfold thickness. The requirements specified in 13.7.2 shall also be fulfilled.

8.3.4. Hatch End Beams

8.3.4.1. Sectional modulus of a hatch end beam supported by pillar in the centre plane shall not be less than the value obtained in accordance with the following formula:

$W = \frac{1000pl}{m\sigma}(l_1 b_1 + l_2 b_2)w_k$, [cm^3]

m – bending moment factor determined in accordance with the following formula:

$$m = \frac{10.17}{1 - 1.148(\frac{b}{2l} - 0.4)^2}$$

s = 110*k*, [MPa] – allowable stress;

l – hatch end beam span, determined in accordance with 3.2.1, assuming that it

is supported in the centre plane and at the side, [m];

p – design load determined in accordance with the rules, [kPa];

l_1 – half the hatch length, [m];

b_l – breadth of the area supported by the longitudinal deck girder (hatch coaming) in the middle of length l_1, [m];

l_2 – half the distance between the hatch end beam and the next pillar or transverse bulkhead, [m];

b_2 – breadth of the area supported by the longitudinal deck girder (hatch coaming) in the middle of length l_2, [m];

b – hatch breadth, [m];

w_k – corrosion addition factor (see 13.6.1).

8.3.4.2. For other design patterns of the hatch end beam support (i.e. with no support in the centre plane), its strength shall be checked by direct calculations assuming p and s in accordance with 8.3.4.1.

8.3.4.3. Height and breadth of hatch end beam brackets shall not be less than the hatch end beam height at the side.

8.3.5. Deck Cantilevers

8.3.5.1. The requirements specified in this sub-chapter apply to scantling of hatch deck cantilevers together with the associated web frames.

8.3.5.2. For the purpose of this sub-chapter, the following symbols have been used:

a, e – web frame and deck cantilever scantlings at the side, [m];

b_e – face plate effective breadth, determined in accordance with the requirements specified in 8.3.5.4, [cm];

b – half the actual breadth of face plate, [cm];

l – deck cantilever span, [m];

P – concentrated force induced by the cargo on the hatch cover and transversely stiffened deck, applied at the intercrossing of deck cantilever and hatch coaming, [kN];

Q – distributed load induced by the cargo on the longitudinally stiffened deck:

$Q = plb$, [kN];

Q = 0 for transversely stiffened deck;

b_0 – loaded area breadth equal to the spacing of cantilevers, [m];

p – design pressure due to cargo, calculated in accordance with the requirements specified in Chapter 14, [kPa];

u – distance between the relevant cantilever cross-section and its end, [m].

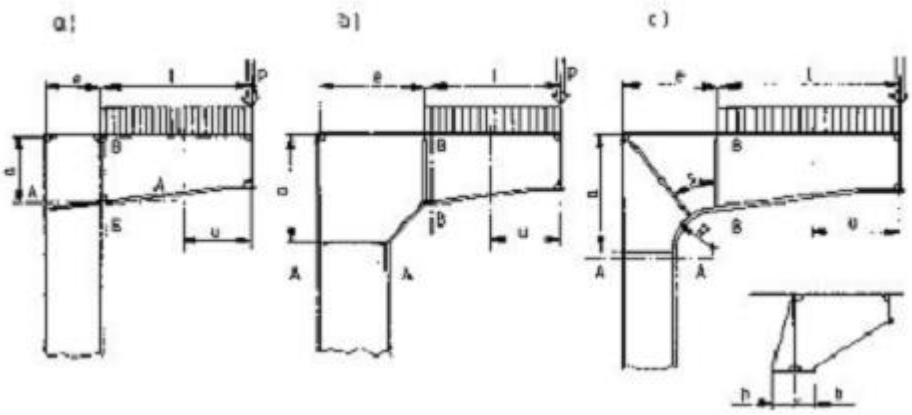

Figure 8.3.2: Deck cantilevers in way of the hatch

8.3.5.3. Sectional moduli of a cantilever and web frame (sections A–A and B–B,) shall not be less than:

$W = \frac{6}{k} l(P + 0.5Q)$, [cm³]

8.3.5.4. Face plate effective width, b_e, shall be determined as follows:

- for not rounded connection of the cantilever to the web frame:

  $b_e = 2b$, [cm]

- for rounded connection of the cantilever to the web frame:

  $b_e = 2Kb$, [cm]

$$K = 1 - k_1(1 - \frac{2}{c+2})$$

k_1 – coefficient taken from Table 8.3.1;

c – coefficient determined in accordance with the following formula:

$$c = \frac{b^2}{Rt_m}$$

R – radius of curvature, [cm];

t_m – face plate thickness; to be taken as : $t_m \geq \frac{u}{10}$, [cm] values of co-efficient k_1

Table 8.3.1

s/b	k_1
$0 < s/b \leq 2$	$0.1s/b$

$2 < s/b \leq 4$	$0.1(\frac{3s}{b} - 4)$
$4 < s/b \leq 8$	$0.05\ (\frac{s}{b} + 12)$

s – spacing of stiffeners according to Figure 8.3.2*c*, measured along the face plate edge, [cm].

8.3.5.5. Width of the effective flange of the deck and shell plating shall be taken as 0.4*l*. The assumed width shall exceed neither the spacing between the cantilevers nor the distance *e* (see Figure 8.3.2).

8.3.5.6. The net sectional area, A_s, of the cantilever web shall not be less than:

$$A_s = \frac{0.12}{k}\ (P + Q\ \frac{u}{L})$$

8.3.5.7. Thickness of the corner web plate in way of sections A–A and B–B in Figure 8.3.2 shall not be less than:

$$t = \frac{0.012}{k}\ (P + 0.5Q)\frac{l}{ae}, \text{ [mm]}$$

The corner web plate made in accordance with Figure 8.3.2 (a) and (b) shall be additionally strengthened if dimensions *a* and *e* exceed 70*t*.

8.4. Additional Requirements

8.4.1. Strengthening at Upper Deck Break

8.4.1.1. Upper deck may be stepped. Where the upper deck is stepped in way of the afterbody, the upper deck stringer plate shall extend aftwards beyond the step bulkhead by at least 2 frame spacings and the deck stringer plate width shall decrease from its full width to that equal to the depth of the frame to which the stringer plate is to be welded.

Similar construction is required for the upper deck step in the forebody.

8.4.1.2. Where the upper deck is stepped in way of the afterbody, the raised upper deck stringer plate shall extend forwards beyond the step by the application of a bracket narrowing gradually towards the ship side over the stretch of at least 3 frame spacings. The raised upper deck stringer plate extending beyond the step shall be strengthened by stiffeners whereas the free edge shall be strengthened by means of flat bar of flange.

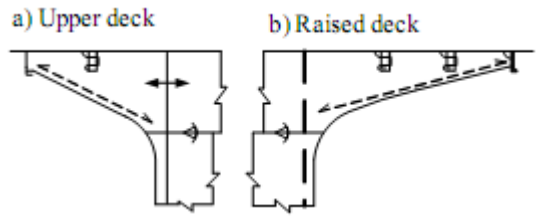

Figure 8.3.3 Decrease of stringer plate width in way of the upper deck step

Similar construction is required for the upper deck step in the forebody.

8.4.1.3. Sheer strake at the raised deck shall extend beyond the step bulkhead forwards by at least 1.5 the step height and evolve into the sheer strake upper edge.

8.4.1.4. Between the decks, vertical brackets of the construction as shown in Figure 8.3.3 shall be used in way of the step from the side to side with the spacing not exceeding 0.6 m or in line with the superstructure boundary above the step.

8.5. Openings in Decks

8.5.1. Width of single hatch openings shall not, in general, exceed 0.7 of the ship breadth. Where the opening width is greater or there are double or triple openings situated transversely, the deck structure is subject to INTLREG consideration in each particular case.

8.5.2. Corners of large openings (more than 2.5 m in length or 1.2 m in width) in the strength deck, other decks and superstructure decks shall be rounded with a radius not less than 150 mm.

8.5.3. The longer side of the opening shall be oriented along this ship. Otherwise, the construction of opening corners is subject to INTLREG consideration in each particular case.

8.5.4. To hatch openings, machinery casings and other large openings, the requirements specified in paragraph 7.5.2 apply.

8.5.5. If the casing length is greater than the ship breadth, then it is recommended that a continuous deck transverse girder be applied in the casing midspan. Unless such a girder is applied, the construction of casing and deck strengthening in way of the casing is subject to INTLREG consideration in each particular case.

8.5.6. If the width of hatch opening, machinery casing, etc. exceeds $0.6B_1$ is the least breadth of ship throughout the machinery casing), then the strength deck thickness shall be increased respectively to make up for the reduction of the deck cross-section. Amidships, the required cross-sectional area of deck shall be ensured in accordance with the requirements specified in Section 13, [13.4.]

8.5.7. Corners of all minor rectangular openings in each deck shall be rounded in accordance with the requirements specified in Section 3, [3.5.2.4.]

8.6. Coamings

8.6.1. Hatchway Coaming Structure

8.6.1.1. Coamings whose height above the deck is 0.6 m or more, shall be rein forced by a flat bar of the width not less than 120 mm welded on the whole perimeter within 0.25 m from the coaming upper edge. Lower edges of the coaming face plates under the deck shall be rounded inside the opening.

8.6.1.2. The structure of coamings which are not in line with deck stringers or hatch end beams shall extend, below the deck, to the nearest deck girders after which a bracket connected to the nearest beam or intercostal stiffener shall be applied.

8.6.2. Scantlings of Hatchway Coamings

8.6.2.1. Thickness of hatchway coaming vertical plates on the open deck shall not be less than:

$t = 0.2L0 + 3$, [mm]

and shall be greater than the deck plating thickness by at least 1 mm.

8.6.3. Ventilator Coamings

8.6.3.1. Thickness of ventilator coamings situated on the upper deck, raised quarterdeck and forecastle deck shall not be less than that determined in accordance with the following formula:

$t = 0.01d + C$, [mm]

where: C = 4 mm within $0.25L_0$ from *FP*;
C = 3 mm elsewhere;
d – inside diameter or length of the longer side of the ventilator coaming cross section, [mm]. Thickness t shall not be less than 4 mm.

8.6.3.2. Thickness of ventilator coamings on the superstructure deck situated outside the region $0.25L_0$ from *FP* need not exceed the deck plating thickness in way of the coaming.

If a ventilator coaming is higher than 900 mm, brackets shall be used to fix such a coaming to the deck.

8.6.3.3. Ventilator coaming shall be determined in accordance with the requirements specified in *Part 4.*

8.6.4. Coamings of Companion-hatches and Skylights

8.6.4.1. The structure of the coamings of companion-hatches and skylights shall have strength equivalent to that of the superstructure.

8.6.4.2. Coaming thickness shall not be less than 4 mm. It need not, however, exceed the deck plating thickness in way of the coaming.

8.7. Stringer Plate

8.7.1. If the deck plating thickness is less than the shell plating thickness, a stringer plate shall be applied.

8.7.2. Stringer plate thickness shall not be less than 400 mm. In the case of rounded deck corner, this dimension shall be measured from the deck transition into curvature.

8.7.3. Stringer plate width in the forebody and afterbody shall not be less than 0.65 the stringer plate thickness in the midship portion of the ship.

8.7.4. Stringer plate thickness in the midship portion of the ship shall not be less than the shell plating thickness.

8.7.5. Stringer plates may have holes only for penetration of drain pipes, sounding pipes and vent pipes.

8.8. Decking

8.8.1. Types of Decking

8.8.1.1. Steel plating of open decks shall be provided with one of the following types of decking:

- Inorganic decking (e.g. Cement decking);
- Paint coating or plastic coating;
- Planking

8.8.2. Requirements for Planking

8.8.2.1. Where planking is provided, it is recommended that:

- planking thickness be at least 40 mm;
- each plank/ woodstave be fixed to the deck plating on every other beam with welded stud bolts of 8 mm in diameter and nuts locked in the holes;
- welded flat bars of scuppers shall have not less than 5 mm in thickness, and their height shall be such that the height of plating above such flat bar be not more than 10 mm.

SECTION 9 BULKHEADS

Contents

9.1. General

9.1.1. Application

9.1.1.1. The requirements specified in this Chapter apply to the structure and arrangement of bulkheads as defined in 1.2.5.

9.1.1.2. Application of corrugated bulkheads or bulkheads made of plates having extruded stiffeners is permitted.

9.1.1.3. The requirements regarding the number of bulkheads and their arrangement are specified in Section 9, [9.2].

9.1.2. Definitions and Symbols

$L_F = L$ – length of ship, as defined in 1.2.2, [m];

T_F – ship draught, to be taken as 0.85H, [m];

H_F – minimum moulded depth measured from the freeboard deck, [m];

δ_F – moulded block coefficient corresponding to draught T_F

$$\delta_F = \frac{V_F}{L_F B T_F}$$

F_P – forward perpendicular, determined for the waterline on which length L_F is measured;

V_F - volume of the submerged part of the ship, determined on the outer edges of frames for draught T_F, *[m].*

9.2. Subdivision

9.2.1. General

9.2.2.1. The requirements regarding the hull subdivision into watertight compartments specified in Chapter 2.

9.2.2.2. Each ship shall have the following transverse watertight bulkheads extending to the bulkhead deck:

- Forepeak bulkhead (collision bulkhead),
- After peak bulkhead,
- Bulkheads bounding the machinery space (after peak bulkhead may form the after bulkhead of machinery space).

9.2.2. Position of Collision Bulkhead

9.2.2.1. Distance l_c from perpendicular FP to the collision bulkhead shall be within the following limits:

$0.05L_F - l_c \leq l_c \leq 0.08L_F - L$, [m]

Where:

$L_F = L$ – length of ship, as defined in 1.2.2;

l_r – parameter taking the following values:

- for ships with ordinary bow shape:

$$l_r = 0$$

- for ships having any part of the underwater body extending forward of FP_F :

$l_r = 0.5l_b$, [m]

$l_r = 0.015L_F$, [m]

$l_r = 3.0$, [m]

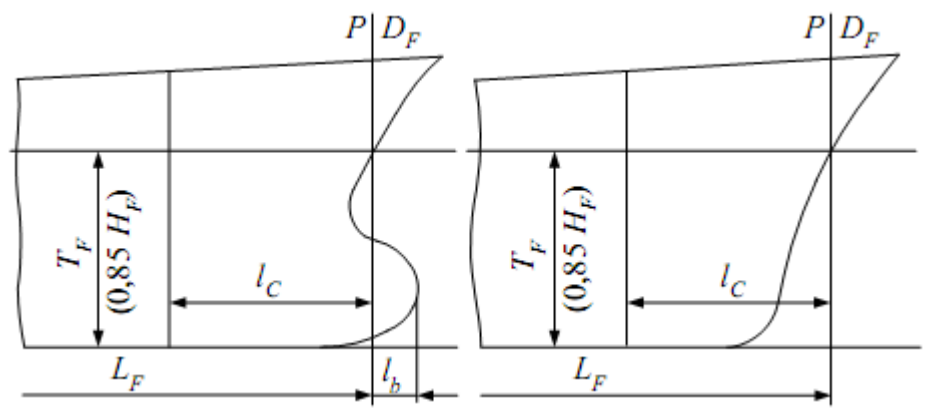

Figure 3.9.1: Determining collision bulkhead position

9.2.2.2. In special cases, the distance between the collision bulkhead and F_P may – subject to INTLREG consent in each particular case – exceed 0.08 L_F if the damage waterline remains below the freeboard deck after the forepeak has been flooded.

9.2.3. Vertical Extent of Watertight Bulkheads

9.2.3.1. Collision bulkhead shall extend to the bulkhead deck. If the forecastle extends beyond the collision bulkhead aftwards, then the collision bulkhead shall extend to that forecastle deck.

9.2.3.2. Afterpeak bulkhead shall extend to the bulkhead deck. In special cases, the collision bulkhead may extend to the ‘tween deck situated above the waterline (watertight structure between such a bulkhead and the after end of ship).

9.2.4. Cofferdams

9.2.4.1. Width of vertical cofferdams shall not be less than one frame spacing and the height of the horizontal cofferdams shall not be less than 0.6 m, unless otherwise specified elsewhere in the Rules. This height may – subject to INTLREG consent in each particular case – be reduced; however access shall be provided for ship repair and inspection.

9.2.4.2. Cofferdams are required between:

- Fuel oil and accommodation and service spaces as well as fresh water tanks and lubrication oil tanks;
- Lubrication oil tanks and accommodation and service spaces as well as lubrication oil tanks and fresh water tanks;
- Fresh water tanks and fuel oil and lubrication oil tanks.

9.2.5. Minimum Bow Height

9.2.5.1. Required bow height H_b, as defined in the *International Convention on Load Lines, 1966*, as vertical distance measured at forward perpendicular *FP* from the summer load waterline to the exposed deck upper edge at the side shall be determined in accordance with the following formula:

$H_b = 56L_1 \left(1 - \frac{L_1}{500}\right) \frac{1.36}{\delta_F + 0.68}$, [mm]

$L_1 = L_F$;

δ_F – moulded block coefficient, the value taken for calculations shall not be less than 0.68.

9.2.5.2. If the minimum bow height has been achieved by an increase of the upper deck sheer, then the deck sheer shall extend throughout the distance not less than $0.15L_F$ aftawards from the fore end of length L_F

9.2.6. Extent of Forecastle

Forecastle shall extend throughout the distance not less than $0.07L_F$ aftwards from the fore end of length L_F.

9.3. Structural Arrangement

9.3.1. General Requirements

9.3.1.1. Collision bulkhead may have steps or protrusions, the requirements specified in 9.2.2 shall be fulfilled.

9.3.1.2. If watertight bulkheads, including the collision bulkhead and the after peak bulkhead as well as their steps form boundaries of tanks, the construction of such bulkheads shall fulfill the requirements specified in 9.5.2.

9.3.1.3. Distance between the after peak bulkhead and after perpendicular shall be determined with respect to the construction of afterbody and stern tube.

9.3.1.4. Openings are permitted in watertight bulkheads, provided that such openings and their closing appliances fulfill the requirements specified in Part III – Hull Equipment.

9.3.1.5. In ships with machinery space situated amidships and with restricted service – mark II or III in the symbol of class – a watertight shaft tunnel need not be applied provided the shafting is otherwise effectively protected. Bearings and stuffing boxes shall be accessible.

9.3.1.6. If it is necessary to cut stiffeners or increase their spacing to arrange a watertight door or for another reason, the bulkhead shall be so reinforced there that such a bulkhead is to be equivalent to an intact bulkhead in respect of stiffness and strength.

9.3.2. Corrugated Bulkheads

9.3.2.1. Where longitudinal bulkheads are arranged as corrugated bulkheads, they shall have plane portions for a distance not less than 0.13H measured from the bottom and deck, respectively.

Transverse corrugated bulkheads with vertical corrugations shall be plane fora distance not less than 0.08B measured from the ship sides.

9.3.2.2. Design spacings of stiffenings in corrugated bulkheads to be used for plate thickness calculation in accordance with 9.4.1.1 shall be assumed as follows:

- for corrugated bulkhead member of trapezoidal cross-section, where $s_2 \neq s_3$, the greater of the following two vales shall be taken:

$$a = 1.05 s_2$$
$$a = 1.05 s_3$$

- for corrugated bulkhead member of trapezoidal cross-section, where $s_2 = s_3$, the greater of the following two vales shall be taken:

$$a = s_2 = s_3$$

- where the web plates are perpendicular to the attached plating, the greater of the following two vales shall be taken:

$$a = s_2$$
$$\mathrm{a} = s_3$$

For calculation of the required sectional modulus of corrugated bulkhead member of trapezoidal cross-section:

$$a = s_1$$

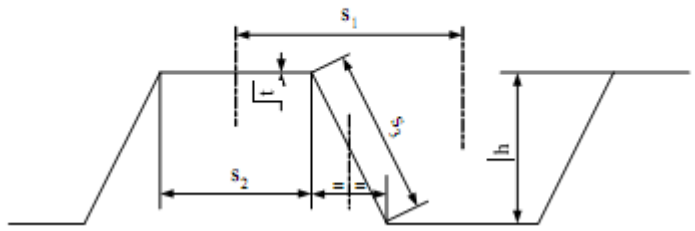

Figure 3.9.2 Corrugated bulkhead

9.4. Scantling of Structural Members of Watertight Bulkheads and Fixing of Stiffener Ends

9.4.1. Plating

9.4.1.1. Plane bulkhead plating thickness shall not be less than the value obtained in accordance with the following formula:

$$t = 15.8na\sqrt{\frac{p}{\sigma}} + C + t_k, \text{ [mm]}$$

a – spacing of vertical or horizontal stiffeners, [m]; for corrugated bulkhead of trapezoidal cross-section determined in accordance with 9.3.2.2; and for corrugated bulkhead of undulated cross-section $a = s$;

p – design pressure, determined in accordance with the rules;

s = 190*k* – allowable stress, [MPa];

C = 0.8 – for lower strake of bulkhead plating,

C = 0.0 – for other strakes of bulkhead plating;

n – coefficient taking the following values:

n = 1.25 for collision bulkhead, *n* = 1.00 for watertight bulkheads;

t_k – corrosion addition, determined in accordance with Section 2,[2.5 or 2.6.] For tank bulkheads, the plating thickness shall be determined in accordance with 9.5.2.

9.4.1.2. Width of the lower strake of plane bulkhead plating measured from the outer bottom shall not be less than:

0.4 m – in ships of a length L_0 = 20 m,

0.6 m – in ships of a length L_0 > 20 m.

In way of penetration of the stern tube and shaft stuffing, the bulkhead plating thickness shall be at least doubled against that required in 9.4.1.1.

9.4.1.3. Plating thickness of corrugated bulkhead with trapezoidal cross-section shall not be less than the value obtained in accordance with the following formulae:

$t = \frac{s_2}{0.05}$, [mm], for $\frac{s_2}{s_3} = 0.5$

$t = \frac{s_2}{0.07}$, [mm] for $\frac{s_2}{s_3} \geq 1.0$

s_1 s_2 s_3 – see Figs.8.3.3.1, [m]

For intermediate values of ratio s_2/s_3, required minimum thickness t shall be determined by linear interpolation.

Where the sectional modulus of the corrugated bulkhead member exceeds the required value, the bulkhead plating thickness may be reduced by multiplying it by the following factor:

$$\sqrt{\frac{W\ required}{W\ actual}}$$

For corrugated bulkhead of undulating cross-section, the following condition shall be fulfilled (see Fig. 3.2.4 *b*):

$$\frac{r}{t} \leq \frac{17}{R_e}$$

r – undulation radius in the neutral axis of the plating thickness, [m],

t – plating thickness, [mm].

9.4.1.4. Plating thickness of corrugated watertight bulkhead of undulated cross-section shall not be less than the value obtained in accordance with the following formula:

$t = 16.5\beta r\sqrt{\frac{p}{\sigma}} + C + t_k$, [mm]

β, *r* – see Fig. 3.2.4 *b*) (β [rad], *r* [m]);

p – design pressure, [kPa], determined in accordance with the rules;

s – allowable stress; to be taken as s = 160*k*, [MPa];

C = 1.25 – for lower strake of bulkhead plating,

C = 0.25 – for other strakes of bulkhead plating.

9.4.2. Stiffeners

9.4.2.1. Plane bulkheads shall be reinforced with vertical or horizontal stiffeners.

Spacing of vertical or horizontal stiffeners shall not exceed 0.5 m for the collision bulkhead and 0.6 m – for other bulkheads.

9.4.2.2. Scantlings of vertical and horizontal stiffeners as well as elements of corrugated bulkheads shall be determined in accordance with the requirements specified in 9.4.2.4 and 9.4.2.6.

9.4.2.3. Collision bulkhead stiffeners shall have the sectional modulus greater than that required for other bulkheads by at least 15%, with the same all other conditions.

9.4.2.4. Vertical stiffeners of watertight bulkheads shall have sectional modulus not less than that determined in accordance with Section 13,[13.6.1], where *p* shall be taken in accordance with the rules and σ – in accordance with the prescribed damaged condition.

Span *l* taken for calculations shall not be less than 2.0 m.

The values of *m* are as follows:

16.0 – where both ends are fixed with brackets;

12.0 – where upper end is fixed by welding to the deck plating or where the stiffener runs continuously to the compartment located above and the lower end is fixed with bracket;

9.5 – where both ends are fixed by welding to the deck plating or bottom plating or where the stiffener runs continuously to the compartments located above or below;

7.5 – where both ends of the stiffeners are not fixed (are bevelled). When determining the sectional modulus of tank bulkhead stiffeners, the requirements specified in 9.5.2 shall be taken into account.

9.4.2.5. Sectional modulus of stiffeners of bulkhead supporting deck stringers shall be greater than that determined in accordance with 9.4.2.4 by at least 25%. These stiffeners shall also fulfill the requirements for pillars specified in the concerning sections.

9.4.2.6. Horizontal stiffeners of watertight bulkheads shall have sectional modulus not less than that determined in accordance with the rules, where *p* shall be taken in accordance with the prescribed rules.

The following values of *m* shall be taken:

16.0 – where both ends are fixed with brackets;

12.0 – where one end is fixed by welding or the stiffener runs continuously through the pillar and the other is fixed with bracket;

8.0 – where both ends are fixed by welding or the stiffener runs continuously through pillars at both ends.

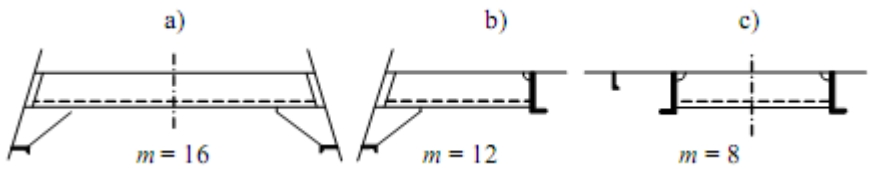

Figure 8.4.2.6: Factors for bulkhead horizontal stiffeners

When determining sectional modulus of tank bulkheads, the requirements specified in 9.5.2 shall be taken into account.

9.4.3. Fixing of Stiffener Ends

9.4.3.1. Bracket scantlings shall be determined in accordance with the requirements specified in the rules. Brackets fixing stiffeners to the deck plating or to the outer bottom plating shall be welded to the beam, floor or frame situated nearest the bulkhead.

9.4.3.2. Height of lower brackets shall not be less than 1/12 of the bulkhead stiffener span.

9.4.3.3. Bracket thickness shall not be less than that of the bulkhead stiffener web.

9.4.3.4. Brackets having a shorter arm not exceeding 250 mm need not have a flange or face plate.

9.4.3.5. Stiffener ends may be bevelled – instead of being fixed with brackets or being welded – only in ships with moulded depth not exceeding 3 m. In that case, bulkhead plating thickness shall not be less than that required in the rules.

9.4.3.6. Collision bulkhead stiffener ends may be welded without bracket only in that part of bulkhead above the upper deck.

9.4.3.7. Horizontal stiffener ends shall be fixed to the ship sides with brackets extending to the nearest frame which will be welded to that frame. The bracket width measured along the stiffener shall not be less than 1.5 times the stiffener height.

9.5. Additional Requirements

9.5.1. Watertight Steps of Bulkheads

Bulkhead step plains shall have plating and stiffeners ensuring strength equivalent to that of plane bulkheads.

9.5.2. Bulkheads, Sides and Decks Forming Deep Tank Boundaries

9.5.2.1. Deep tanks are all tanks other than double bottom tanks defined in 5.3.3.1.

9.5.2.2. Plating of Deep Tank Bulkheads Thickness of deep tank bulkhead plating shall not be less than the value obtained in accordance with the following formula:

$$t = 15.8\, a\sqrt{\frac{p}{\sigma}} + C + t_k, \text{ [mm]}$$

σ – allowable stress of the values taken in accordance with the rules;

C = 1.25 – for lower strake of bulkhead plating and tank top plating (platform or deck forming the tank boundary);

C = 0.25 – for other strakes of bulkhead plating;

p – design pressure, determined in accordance with the rules. The width of lower strake of deep tank bulkhead plating shall fulfill the requirement specified in 9.4.1.2.

9.5.2.3. Deep Tank Bulkhead Stiffeners

Sectional modulus of deep tank bulkhead vertical stiffeners shall not be less than the value obtained in accordance with the rules, where p has been taken in accordance with the rules and σ – in accordance with the rules. The following values of factor m shall be taken:

14.0 – tanks without horizontal framework, both stiffener ends fixed with bracket; 9.5 – tanks with one horizontal framework, both stiffener outer ends fixed with bracket.

9.5.2.4. Frames

Sectional modulus of frames within deep tanks shall fulfil the requirements specified in Section 6, [6.3.3] and 9.5.2.3.

9.5.2.5. Beams

Sectional modulus of beams of platforms or decks forming the tank boundary shall not be less that required, where *p* has been taken in accordance with the rules and the following values:

s = 140k [MPa] and *m* = 9.5 shall be taken for calculations. Beam scantlings shall not be less than those required in 9.3.2. It is recommended that the deep tank top be located below the open deck.

SECTION 10 SUPER STRUCTURES AND BULWARKS

Contents

10.1. Application

The requirements specified in this Chapter apply to superstructures (forecastles, midship superstructures, and poops), deckhouses and trunks as well as to bulwarks, coamings, companion-hatches, skylights etc.

10.2. Structural Arrangement

10.2.1. Openings

10.2.2. Corners of rectangular openings in the outer side boundaries and decks of deckhouses, superstructures, companionways, etc. shall be rounded with a radius not less than 30 mm and reinforced by a flat bar welded on the whole perimeter.

10.2.3. Additional Requirements

10.2.3.1. Adequate strengthening of side boundaries of and decks in deckhouses shall be provided in those places where life boats, boat davits, masts, hoisting winches are situated, as well as in other places where excessive local loads are likely to occur.

10.3. Scantlings of Structural Members

10.3.1. Plating of Walls and Decks

10.3.1.1. Thickness of plating of side boundaries of forecastle, midship superstructure, poop, etc. shall not be less than that required in 12.5.2, where σ = 160*k*, [MPa] shall be taken, and pressure *p* for the plating of poop, midship superstructure and forecastle shall be determined in accordance with the rules, like for double-deck ship taking $H_0 = H$, where *H* – moulded depth measured to the upper deck. Thickness of plating of end bulkheads of the forecastle, midship superstructure, poop as well as deckhouse walls shall not be less than the value obtained in accordance with the following formula:

10.3.1.2. Thickness of plating of end bulkheads of the forecastle, midship superstructure, poop as well as deckhouse walls shall not be less than the value obtained in accordance with the following formula:

$$t = 15.8a\sqrt{\frac{p}{\sigma}} + C, \text{ [mm]}$$

Where:

a – spacing of stiffeners, [m] (for walls made of corrugated plates with trapezoidal cross-section, *a* shall be taken in accordance with 8.4.1.1);

σ – allowable stress of the following values:

σ = 140*k*, [MPa] – for exposed fore end of poop and midship superstructure,

σ = 160*k*, [MPa] – for other walls;

p – design pressure determined in accordance with the following formulae:

- for the fore end:
  $p = 17 + 0.07L_0$, [kPa]
- for other walls
  $p = 8.5 + 0.007L_0$, [kPa]

(for the walls situated above the first tier, the design pressure may be reduced by 15%);

C = 1.0 – for the lower strake of the lower tier,

C = 0.25 – for the other strakes of the lower tier,

C = 0.0 – for the other strakes of other tiers. Plate width of the lower strake of plating 0.5 m.

10.3.1.3. Plating thickness of superstructure (forecastle, midship superstructure, poop) decks shall not be less than:

- for poop deck and midship superstructure deck:
  $t = a(0.15L_0 + 5.2)$, [mm]

- for forecastle deck:
  $t = a\ (0.2L_0 + 5.2)$, [mm]

  However, it shall not be less than:

  $t = 15.8\ a\sqrt{\frac{p}{\sigma_k}}$, [mm]

  Where:

  L_0 – design length of ship, [m];

  a – spacing of beams, [m];

  p – design pressure determined in accordance with the rules, [kPa];

  σ = 160*k*, [MPa].

10.3.2. Wall Stiffeners

10.3.2.1. Sectional modulus of end bulkheads shall not be less than that required in 13.6.1 and the following values shall be taken to calculations:

l – stiffener span, defined as the distance between the decks, however not less than 2 m;

σ – allowable stress taking the following values:

σ = 140*k*, [MPa] – for exposed fore end bulkhead of poop and midship superstructure,

σ = 160*k*, [MPa] – for other walls;

p – design pressure determined in accordance with the rules, [kPa];

m – coefficient taking the following values:

14.3 – where the upper end is fixed to the beam with bracket, and the lower end is welded,

12.5 – where the upper end is fixed with bracket, and the lower end is

welded or fixed with flat bar,

9.5 – where the upper end is welded and is continued above and the lower end is fixed with flat bar,

8.0 – where the upper end is fixed to the transverse deck stiffener with bracket, and the lower end is bevelled (this may be applied only on the aft walls of single-tier superstructure, on steps, in trunks and small deckhouses),

7.5 – where both ends are bevelled (this may be applied only in trunks or small deckhouses from which no access inside the ship is provided);

for *m* = 7.5, allowable stress σ =140*k*, [MPa] shall be taken).

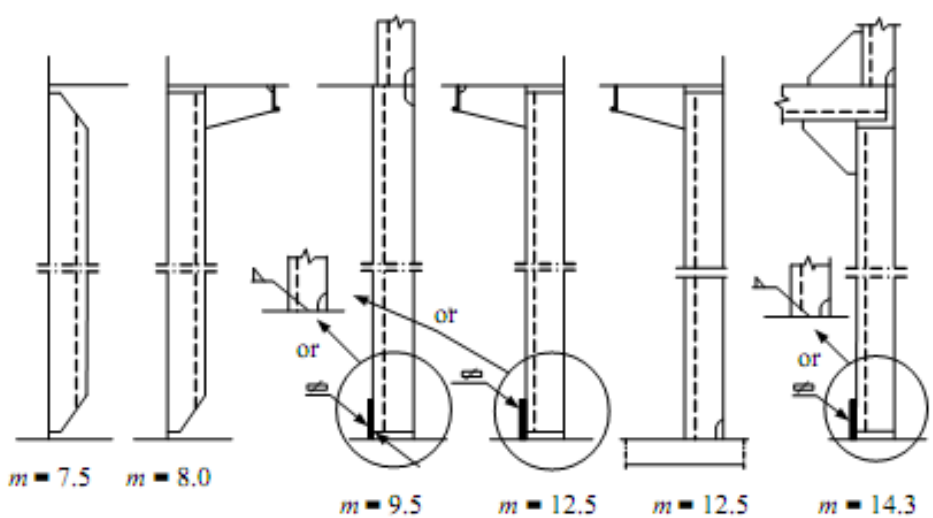

Figure 9.3.2.1: Bending moment factor *m* for superstructure stiffeners

10.3.2.2. Sectional modulus of the side frames in the forecastle, midship superstructure and poop shall fulfill the requirements specified in Section 7, [7.3.3.6.]

10.3.3. Casings

10.3.3.1. Openings in decks and platforms above the machinery spaces shall be arranged inside casings. Casings may be waived only when a compartment situated on the deck forms a part of the machinery space. Openings in deck for the machinery casing shall be arranged in accordance with the requirements specified in 7.5.2.

10.3.3.2. Plating thickness of protected machinery casings below the bulkhead deck shall not be less than the value obtained in accordance with the following formulae:

- in way of cargo spaces:

  $t = 8.5a$, however t ≥ 5mm

- in way of accommodation spaces:

  $t = 6.5a$, However t ≥ 4, [mm]

Where:

a_0 – spacing of stiffeners, [m];

$a \leq a_0$ shall be taken for calculations;

a_0 – prescribed spacing of structural members, [m], in accordance with 12.2.2.1

10.3.3.3. Sectional modulus of the casing wall stiffeners shall not be less than:

$W = 3l^2a$, [cm³]

Where:

l – stiffener span, to be taken as *l* = 2.5 m,
a – spacing of stiffeners, [m]

The applied value of *W* shall be greater than 70% of the sectional modulus required for the watertight bulkhead stiffeners of the same span situated at the same height.

Stiffener lower ends shall be welded to the casing coaming webs below the deck level. The minimum thickness of such coaming shall not be less than 6 mm.

10.3.3.4. Casings inside the superstructure or deckhouse may have plating of a thickness less by 0.5 mm than that required for the casing plating on the ‘tween deck, however not less than 4.5 mm, and the coaming thickness shall not be less than 5.5 mm.

Sectional modulus of the stiffeners of such casings and coamings shall not be less than 55% of that required for the watertight bulkhead stiffeners of the same span situated below the bulkhead deck.

10.3.3.5. If the casing portion situated below the bulkhead deck forms a part of the watertight bulkhead taking into account in the ship subdivision calculations, then its strength shall not be less than that of transverse bulkhead situated at the same height.

10.3.3.6. Machinery casing plating thickness on the exposed upper deck shall be greater by 15%, and its sectional modulus – by 50% than those required for the deckhouse in the same location. Thickness of the lower strake (at least 500 mm in width) of casing plating within the lower tier shall be additionally increased by 1 mm.

10.3.3.7. Machinery casing plating thickness at the height of the second and higher tiers shall be greater by at least 10%, and the stiffener sectional modulus shall be greater by at least 20% than those required for the deckhouse of such a tier.

10.4. Bulwarks

10.4.1. General Requirements

10.4.1.1. Robust bulwarks or rails shall be arranged on all exposed parts of the deckhouse deck and other decks if they are working decks. The height of bulwark, bulwark with railing on the upper edge and barriers shall be determined in accordance with the requirements specified in Part III – Hull Equipment. The minimum height measured from the top surface of the deck plating or deck planking is 1.0 m.

10.4.1.2. Where, in some place, the bulwark is welded to the sheer strake, the smooth transition with a radius of at least 100 mm between the bulwark plating and the sheer strake shall be maintained.

10.4.2. Bulwark Thickness

10.4.2.1. Bulwark plate thickness shall not be less than the value determined in accordance with the following formula:

$t = 0.065L_0 + C$, [mm]

However not less than 3 mm, but it need not to be more than the thickness required for the superstructure side walls.

The following values of *C* shall be taken:

C = 2.25 for bulwark plates on open deck and forecastle deck within 0.25L_0 from *FP*,

C = 2.00 for bulwark plates on the open deck and the first tier deck located from 0.25 L_0 from *FP* aftwards,

C = 1.75 for bulwark plates on the second tier deck and higher tiers.

10.4.2.2. Where the height of bulwark is 1.8 m and more, the thickness of bulwark plates shall fulfill the requirements for the superstructure side walls. For intermediate height of bulwark, the bulwark plate thickness may be determined by linear interpolation.

10.4.3. Stiffening and Bulwark Rails

10.4.3.1. Bulwark upper edge shall be finished with rail made of sufficiently firm section (angle bar, bulb bar or oval tube) having a thickness greater than that of the bulwark plating by at least 1 mm. The bulwark rail shall not have less than 75 mm in width.

10.4.3.2. Where the bulwark is not connected to the deck, the bulwark lower edge shall be reinforced with horizontal stiffener.

10.4.4. Arrangement of Stays

10.4.4.1. Bulwark shall be supported by stays spaced not more than 1.5 m. In the fore part of the ship – within 0.07 L_0 from FP – the spacing of stays shall not exceed double frame spacing. In ships having ratio T/H > 0.95 and where the flare is large, INTLREG may require application of stays at each frame.

10.4.5. Scantlings and Construction of Stays

10.4.5.1. Stay thickness shall be greater than the bulwark plating thickness by at least 1 mm.

10.4.5.2. The width of lower end of the stay of bulwark having 1 m in height shall not be less than that determined in accordance with the following formula:

$b = (0.65L_0 + 150)\sqrt{s}$, [mm]

s – Spacing of stays, [m].

In the fore part of ship within 0.07 *L* from *FP*, *s* = 1.5 m shall be taken for the calculation of *b*.

Outside the fore part of ship, the value of *b* may be reduced by 20% if the bulwark has been welded to the sheer strake.

10.4.5.3. Where the bulwark height exceeds 1 m, width *b* shall be increased in proportion to the bulwark height.

10.4.5.4. The width of upper end of the bulwark stay shall be equal to that of the bulwark rail. Stays shall have either flanges or face plates. The width of flange (face plate) shall not be less than 60 mm. The lower end of flange (face plate) shall be bevelled and shall not be fixed to the deck plating.

10.4.5.5. If bulwark is interrupted to arrange gangways etc., the stays located at the segment ends shall have thickness greater than that of bulwark by at least 25%.

10.4.5.6. Additional strengthening of bulwark may be required in way of mooring pipes, fairleads and eyeplates for cargo gear.

10.4.5.7. Stays shall be fixed in the same planes as beams (terminating not further from the ship side than 30 mm), upper ends of frames welded to the deck and brackets, and the stays shall be welded to rail, bulwark and deck.

10.4.5.8. Width of the lightening holes in stays shall not exceed half the stay width in the relevant cross-section. In the lower part of stays, in way of the bulwark plating, adequate cuts shall be made for the deck water drainage.

10.5. Freeing Ports

10.5.1. Freeing ports in bulwarks shall be so arranged along the bulwark as to allow for quick and effective drainage of water from the entire deck. Lower edges of freeing ports shall be arranged as low as practicable. If the sheer strake extends above the deck, the construction of freeing ports shall not disturb the sheer strake, and the outline of the opening for the freeing port or drainage shall have lower corners in the shape of ellipse quarter with its edge situated at least 10 mm above the deck stringer plate.

10.5.2. Where bulwarks form sheltered areas on the exposed parts of deck, the minimum area of the freeing port – at each side of the ship in way of each of such sheltered areas – shall be determined taking account of the sheltered area length and bulwark height.

10.5.3. For a bulwark of mean height not exceeding 1.2 m, the area of freeing ports on each of the ships sides shall not be less than the value obtained in accordance with the following formula:

- for l ≤ 20 m: $A = 0.7 + 0.035l$, [m^2]
- for l > 20 m: $A = 0.035l$, [m^2]

l_0– bulwark length of the restricted space, however not more than 70% L_0, [m].

10.5.4. Where the mean height of bulwark is more than 1.2 m, the required area of freeing ports shall be increased by 0.004 m^2 per each metre of the restricted space length and per each 100 mm of slope height.

10.5.5. Subject to INTLREG assessment that the deck sheer is insufficient to ensure effective deck water drainage, it may be required to increase the area of freeing ports.

10.5.6. Freeing ports of a height exceeding 300 mm shall be provided with bars arranged with spacing not more than 230 mm and not less than 150 mm or other equivalent protection means shall be provided. If freeing port flaps are applied, their construction is subject to INTLREG approval in each particular case.

10.5.7. In ships intended to operate in the areas where icing occurs, freeing port flaps and other protective means shall be provided. The construction of such flaps or protective means shall

allow for their easy dismantlement to reduce the ice accumulation. Dimensions of openings and the arrangements for their dismantlement are subject to INTLREG consent in each particular case.

10.5.8. Cockpits and recesses whose bottom is above the maximum draught waterline where water may accumulate shall be provided with effective means to discharge the water overboard.

SECTION 11 STEM, STERNFRAME, PROPELLER SHAFT BRACKETS AND KEEL

Contents

11.1. General

11.1.1. The requirements mostly specified in this Chapter will apply to the subjects including construction, shape and scantlings of stem, stern frame, fixed nozzle, and propeller shaft brackets.

11.1.2. The fabrication by fusion welding can be done to plates like Keel, stem and Stern frame or as steel casting, steel forging or made of rolled steel.

11.1.3. Welded structure or steel casting of the stem or stern frame will be strengthened by transverse brackets (cast webs).

11.1.4. Butt welding is required as an essential assembly method for the particular components of stem, stern frame and propeller shaft brackets.

11.1.5. Plate (casting edge) thickness in way of the connection to the hull structure shall be reduced to the thickness of those components to which the stem or stern frame will be welded (smooth transition of the bevel not exceeding 1:3 is required).

11.2. Stem

11.2.1. Structure

11.2.1.1. Strengthening of the steel plates at stem part shall be done by transverse brackets fitted not greater than 0.6 m apart below the summer load waterline and not greater than 0.8 m apart above the summer load waterline. Vertical arrangement of the brackets shall correspond to that of the framing system structural members, as far as practicable. Shell plating brackets are to be equal to that of the thickness brackets they are connected to. The brackets are meant to extend beyond the connection of the stem with the plating of shell to the nearest frames to which they shall also be connected.

11.2.1.2. If the bow having bend radius or blunt form of stem plates at the level of summer load waterline is more than 15 cm or 150 mm, then application of the stem web strengthened with face plate shall be provided at the center plane from the keel to level 0.15T above the waterline. The face and web plate are not to have thickness less than thickness t_p of shell plating connected to the stem.

11.2.1.3. Another construction approval shall also be provided by INTLREG for longitudinal reinforcement of plates at stem part.

l – Length of bar stem section required in 11.2.2.1

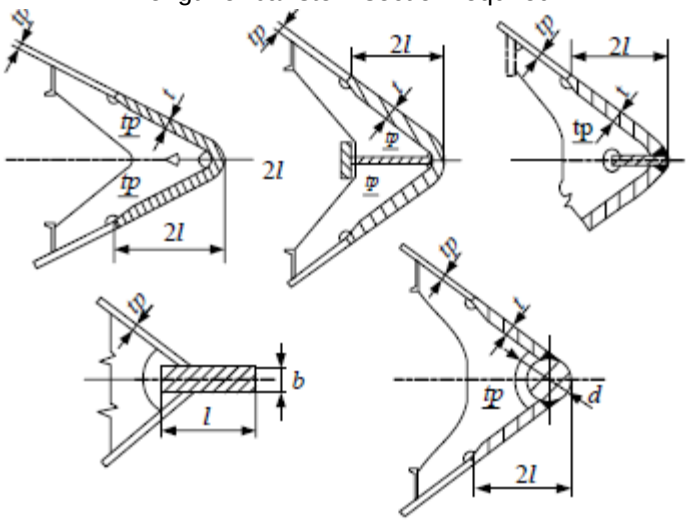

Figure 3.11.1: Fabricated stems and bar stems

11.2.1.4. Connection of the stem shall be done to the bar keel or flat keel and, if practicable, to the bottom center girder as well.

11.2.2. Scantlings

11.2.2.1. Dimensions of the stem bar with solid rectangular cross-section (see Figure 3.11.2) from the keel to the summer load waterline cannot be less than those determined according to the following formulae:

– length: $l = 1.2\ L_0 + 80$, [mm]

– breadth: $b = 0.4\ L_0 + 12$, [mm]

The cross-section area of the stem above the summer load waterline may be gradually tapered to 70% of the area acquired from the scantlings given above.

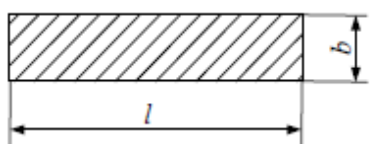

Figure 3.11.2

11.2.2.2. Steel plates are prescribed as the material for fabricated stems, the thickness of which shall not be less than the value obtained according to the following formula:

$$t = 0.1L_0 + 4, \text{ [mm]}$$

In no case shall the adopted thickness of plates be less than that of the bottom plating in way of their connection to the stem foot.

The plate thickness may be gradually tapered to the thickness of the shell plating at the ship ends, above the summer load waterline.

It is recommended that the length of the cross-section of the fabricated stem be not less than twice that of the bar stem required in 11.2.2.1.

11.3. Single-screw Ship Stern frame

11.3.1. Structure

11.3.1.1 Stern frame shall be of simple structure and shall have rounding radii as large as practicable and it shall be strengthened with brackets. Extension of the lower part of the stern frame shall be done from the propeller post forwards by at least one frame spacing beyond the fore edge of the stern tube. Connection of ribs of the stern frame lower part to at least one floor shall be done. Extension of the rudder post shall be done into the stern counter for the distance sufficient for its strong connection to the transom plate, though this distance shall not be less than triple length of the propeller post.

11.3.1.2 Extension of the transom plates mentioned in 11.3.1.1 shall generally be done to the nearest deck.

11.3.1.3 Stern frame without rudder post or with detachable rudder axle shall have the propeller post of the cross-section required in 11.3.2.1.

11.3.2. Scantlings

11.3.2.1. Propeller post with solid rectangular cross-section between the keel and stern counter shall not have dimensions less than the values obtained according to the following formulae:

- Length: $l = 1.30L_0 + 95$, [mm]
- Breadth: $b = 1.60L_0 + 20$, [mm]

Length of the rudder post cross-section may be less than that of the propeller post by 10%. The stern frame cross-section may be gradually reduced to 40% of the propeller post cross-section, above the stern counter.

11.3.2.2. The sole piece with the solid rectangular cross-section shall have the following dimensions, if the propeller post and rudder post form a single unit:

- Height greater than the propeller post length by at least 10%;
- Breadth greater than that of the propeller post cross-section by at least 40%.

Sole piece unsupported length between the propeller post and rudder post shall be as little as practicable. Construction of the stern frame lower part shall be done with smooth rise above the base plane.

11.3.2.3. Stern tube wall thickness after machining shall not be less than the greater of the following values:

- 60% of the propeller post cross-section breadth,
- 30% of the propeller shaft diameter.

11.3.2.4. Thickness of the transom plate and the additional transom plate shall be greater than that required for after peak floors by at least 2 mm.

11.3.2.5. Any section modulus of the sole piece related to the vertical axis, W_z, shall not be less than the value obtained according to the following formula:

$$W_Z = \frac{R_2 l_x}{100k}, \text{ [cm}^3\text{]}$$

Where:

l_x – distance between the relevant cross-section and the rudder axle, [m]; the value of l_x taken for calculations shall fulfill the condition: $0.5l_1 \leq l_x \leq l_1$; for l_1 – see Figure 3.1.2.3;

R_2 – assumed reaction force acting in the rudder lower bearing or in the bearing positioned in the sole piece of stern frame, determined according to the requirements specified in Part III – Hull Equipment, for the ship speed not less than that specified for ships without ice strengthening, [N]; in general, $R_2 = 0.7$ F, [N] may be taken,

F – assumed force acting on the rudder blade, [N], determined according to the requirements specified in Part III – Hull Equipment.

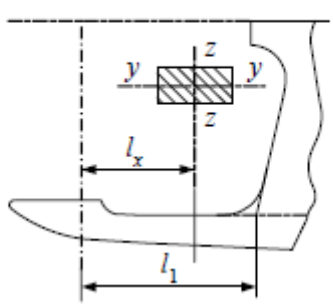

Figure 3.12.3: Stern frame sole piece

11.3.2.6. The stern frame sole piece sectional modulus, W_y, calculated for the horizontal neutral axis, in no cross-section, shall be less than that determined according to the following formula:

W_y=0.5 W_z , [cm^3]

Where: W_z – determined according to formula 11.3.2.5.

11.3.2.7. Any cross-section A of the sole piece shall be not less than either that determined according to the requirements specified in 11.3.2.2 or that determined according to the following formula:

$A_s = \frac{R_2}{4800k}$, [cm^2] (11.3.2.7)

R_2 – see paragraph 11.3.2.5.

11.3.2.8. In no cross-section of the sole piece, shall the equivalent stress, σ_{zr}, exceed 115k, [MPa].

The stresses shall be determined according to the following formulae:

$\sigma_{zr} = \sqrt{\sigma^2 + 3\tau^2}$, [MPa]

$\sigma = \frac{R_2 I_x}{W_z}$, [MPa]

$\tau = \frac{R_2}{100\ A_s}$, [MPa]

σ_{zr} – equivalent stress, [MPa];

σ – normal stress, [MPa];

τ – shear stress, [MPa];

R_2, I_x, W_z – see paragraph 11.3.2.5;

A_s – see paragraph 11.3.2.7.

11.3.2.9. Dimensions of the cross-section of propeller post of the stern frame fitted with both upper and lower bearings shall be determined according to Figure 3.12.4 (for welded stern frame) or Figure 3.12.4 (for steel cast stern frame) and with the formulae as below:

– For welded stern frame:

$t = 0.16L_0 + 6.4$, [mm] (11.3.2.9)

$l \geq 2.5L_0 + 160$, [mm], $b \geq 0.8\,l$ (11.3.2.9)

$t_w \geq 1.2\,t_p$, [mm] (11.3.2.9)

t_p – thickness of plating in way of stern frame;

– For steel cast stern frame:

$t_1 = 0.15L_0 + 6.6$, [mm] (11.3.2.9)

$t_2 = 0.25L_0 + 11.0$, [mm] (11.3.2.9)

$t_3 = 0.35L_0 + 15.4$, [mm] (11.3.2.9)

$l \geq 1.9\,L_0 + 135$, [mm], $b \geq 0.8\,l$ (11.3.2.9)

$t_w \geq 1.2\,t_p$, [mm]. (11.3.2.9)

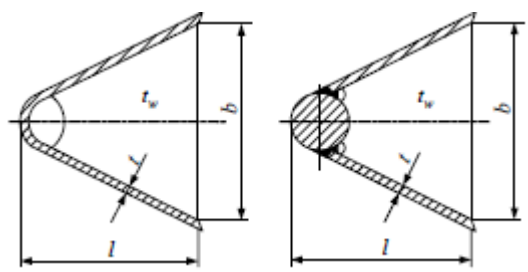

Figure 3.12.4: Welded stern frame

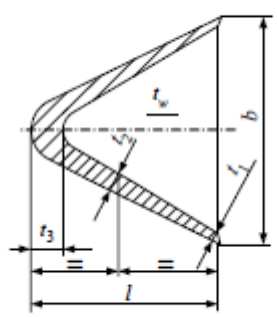

Figure 3.12.5: Steel cast stern frame

11.3.2.10. Arrangement of strengthening brackets shall correspond to that of the framing system structural members. Application of the brackets shall be done with the spacing exceeding neither 0.6 m nor the frame spacing. Thickness of brackets shall surpass that of the plating in way of the stern frame by at least 20%.

11.3.2.11. The requirements specified for welded stern frame shall be fulfilled by stern frame cross-section at the stern counter.

11.4. Twin-screw Ship Stern frame

11.4.1. Structure

11.4.1.1. The requirements specified in Section 11, [11.3] shall be fulfilled by stern frame structure and its connection to the ship hull, to the extent corresponding to the specific considerations of the stern frame being dealt with in this sub-chapter.

11.4.1.2. Extension of the lower part of the stern frame shall be done forwards and connection of its stiffener shall be done to at least two floors.

11.4.1.3. Welding of the skeg side plating shall be done to the flat bar – of a thickness not less than 1.5 times the plating thickness – situated in the center plane (see Figure 3.12.6), where two rudders situated aft of the screws and skeg situated in the center plane are applied.

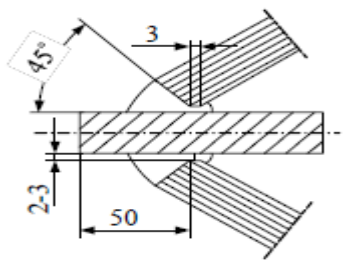

Figure: 3.12.6

Termination of skeg in the center plane of twin-screw ship with two rudders

11.4.2. Scantlings

11.4.2.1. Rectangular stern frame cross-section shall not have dimensions less than the values obtained in accordance with the following formulae:

– Length: $l = 1.00L_0 + 95$, [mm] (11.4.2.1)

– Breadth: $b = 0.70L_0 + 9.0$, [mm] (11.4.2.1)

Stern frame cross-section in the stern counter may be gradually tapered to 50% of the above dimensions whereas the welded stern frame cross-section may be tapered to the dimensions required for the welded stern frame of single-screw ship.

11.4.2.2. Thickness of the transom plate shall be greater than that required for after peak floors by 2 mm.

11.4.2.3. Thicknesses of welded stern frame components shall not be less than the values determined according to the following formulae:

$$t = 0.13L_0 + 5.5 \text{ , [mm]}$$

$t_1 \geq 1.15t$, [mm] (10.4.2.3-2) Thickness *t* may be less by 15% than that required for the similar sternframe of single-screw ship with the spacing of transverse ribs not exceeding 0.75 m.

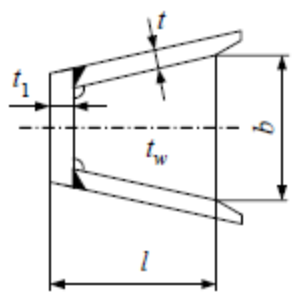

Figure 3.12.7 Welded sternframe of twin-screw ship

11.4.2.4. Thicknesses of the components of steel cast stern frame in twin-screw ships may be less by 15% than that required for the similar stern frame of single-screw ship (see Figure 3.12.4). The spacing of transverse ribs shall not exceed 1.0 m.

11.5. Propeller Shaft Brackets

11.5.1. Orientation of the arms of two-armed shaft brackets is to be done at an angle around 90° to each other. Intersection by the axes of their arms shall be done on the propeller shaft axis.

11.5.2. Cross-section area of each arm of the shaft bracket shall not be less than 60% that of the propeller shaft in the bracket plane, the arm thickness – not less than 0.45 the shaft diameter, arm length – not less than 2.3 the shaft diameter, and the boss thickness – not less than 0.35 the shaft diameter. According to the requirements specified in Part VI – Machinery and Piping Systems, the boss length shall be taken.

11.5.3. Cross-sectional area of a weld or rivets fixing each arm of the bracket shall not be less than 25% of the propeller shaft diameter. The flange thickness shall not be less than 25% of the propeller shaft diameter, where bracket arms are fixed by flanges.

11.5.4. As stated in paragraphs 11.5.2 and 11.5.3, dimensions of fabricated shaft brackets and the arrangements fixing them to the hull shall not be less than those. Thickness of bracket plates, t_w, shall not be less than that determined in accordance with the following formula:

$$t_w = 0.15L_0 + 6 \quad \text{, [mm] (11.5.4)}$$

Construction of shaft brackets with their arms oriented an angle less than 80° or more than 100° and additional hull reinforcements in way of such brackets is subject to INTLREG consent in each particular case.

11.6. Keel

11.6.1. The values obtained according to the following formulae (see Figure 3.12.8), dimensions of the bar keel cross-section shall not be less than those:

height: $h = 1.30\,L_0 + 95,$ [mm]

breadth: $b = 0.70L_0 + 7,$ [mm]

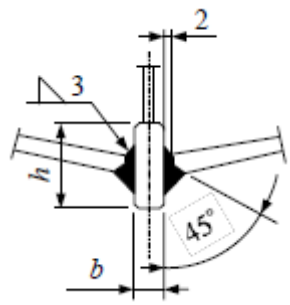

Figure 3.12.8 Bar keel

Welds required for the connection of bottom plating to keel are shown in Figure 3.12.8.

11.6.2. According to the following formula, flat keel breadth shall not be less than the values obtained:

$b = 600 + 5.0L_0,$, [mm] (11.6.2)

Flat keel thickness shall exceed – by at least 1 mm – the bottom plating thick-ness in the mid ship hull portion.

11.6.3. Permission for the box keel (see Figure. 11.6.3) is provided unless its vertical wall thickness is less than 0.8 the bar keel breadth, *b*, determined according to the formula and the lower plate thickness – less than bar keel breadth *b*. Application of a membrane having thickness equal to that of floor shall be provided, at every other frame space in the box keel.

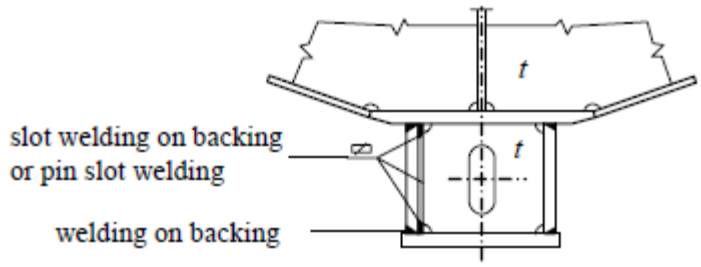

Figure 3.11.9: Box keel

11.7. Distance between Screw and Hull

11.7.1. It is recommended, in single-screw ships, that the distance from the screw blades and rudder to the hull is to be not less than those specified in Table 3.11.1 (see Figure 3.12.10). Values a, b, c and e specified in Table 3.11.1 can also be applied to ships with the under hung rudder.

Table 3.11.1 Minimum distance between the screw and single-screw ship hull

Dimension symbol	Distance between the screw blade and hull
a	0.10d
b	0.21d
c	0.18d
d	0.04d
e	200 ÷ 250 mm

D – screw diameter

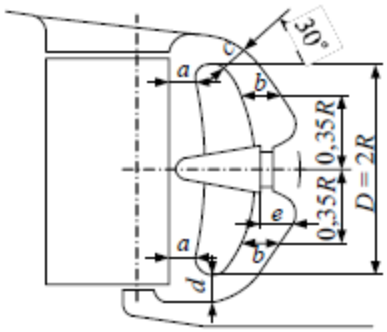

Figure 3.12.10 Minimum distance from the screw blades and rudder to single-screw ship hull

11.7.2. It is recommended, in twin-screw ships, that the distance shall be as long as practicable, from the propeller blade end to the hull and shaft bracket (see Figure 3.12.10). It is recommended that dimensions f and g (see Figure 3.1.2.10) be not less than:

f = 0.20D (10.7.2-1)

g = 0.20 (10.7.2-2)

D – screw propeller diameter

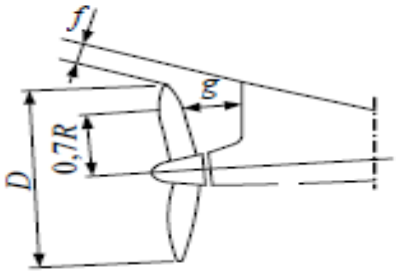

Figure 3.12.11: Minimum distance between the screw and twin-screw ship hull

SECTION 12 SEATINGS

Contents

12.1. General

12.1.1. For the construction of seating's for the main engines, boilers, and other heavy equipment located in the engine room as well as for deck, processing, cargo handling, auxiliary and other machinery, the requirements specified in this Chapter can be applied.

12.1.2. To ensure the transmission of longitudinal and transverse – both static and dynamic – loads from such machinery to the hull structure, seating's of the main engine, gears and power generating sets shall have a robust and rigid structure attached to the structural members of the bottom, sides and decks.

12.2. Structure and Scantlings of Structural Members

12.2.1. Seating's of Main Engines, Gears and Power Generating Sets

12.2.1.1. In general, seating shall consist of two longitudinal girders and horizontal bed plates for direct fixing of the engine, gear or generating set. Provision of access to the seating structural members shall be done for inspection purpose and to prevent water from accumulation under the seating.

12.2.1.2. The thickness of single bottom side girder shall not be less than that required for the seating web or for the bottom center girder, where it is also considered as the seating web. Specification is provided in Section 5, [5.4.6] for reinforcements of the bottom floors that are required in way of a seating.

12.2.1.3. Thickness of the seating structural members shall not be less than the value determined according to the following formulae:

– For low-speed engine, boiler or machinery component (specified in Table 3.12.1):

$$t = c_1 \sqrt[3]{M} + t_m, \text{ [mm]}$$

M – Mass of engine, boiler or machinery component in operating condition, [t];

c_1 – factor to be determined in accordance with Table 3.12.1;

t_m = 4.0 mm – thickness allowance.

Table 3.12.1: Values of factor c_1

Machinery component	Foundation structure components		
	Horizontal plates (bed plates)	Web plates of longitudinal girders	Brackets, including console brackets 1)

Main internal combustion engine Electric main propulsion, generating set, electric propulsion motor	4.65	3.00	2.50
Electric main propulsion, generating set, electric propulsion motor	4.15	2.70	2.70
Boiler and other equipment of considerable mass	3.65	2.40	2.40

[1)] Console brackets – trapezoid brackets, three edges of which are attached to the seating structure members.

– For medium-speed engine:

$t = c_2 \sqrt[3]{N}$, [mm]

c_2 = 2.3 for horizontal plate (bed plate);

c_2 = 1.6 for web plates of seating inner girders;

c_2 = 1.3 for web plates of girders, consoles and brackets;

N – engine rated power, [kW].

12.2.2. Deck Machinery Foundations

12.2.2.1. Positioning of the foundation longitudinal girders welded to the deck or rounded sheer strake shall be done just over longitudinal deck girders. For their smooth and continuous transition into the deck girders, construction of the foundation longitudinal girders shall provide.

12.2.2.2. The method of connecting the foundation to the deck stringer upper surface is subject to INTLREG consent in each particular case.

12.2.2.3. The deck plating shall be readily accessible for inspection, under the foundation. Subject to INTLREG consent in each particular case, foundation watertight construction having the enclosed space filled with an inert material of appropriate anti-corrosion features may be applied.

SECTION 13 LOCAL STRENGTH AND BUCKLING CONTROL

Contents

13.1. General

13.1.1. The requirements specified in this Chapter shall be applied to the scantlings of plates, stiffeners, simple girders, pillars, supporting members, as well as to stiffener and girder brackets. These requirements, except those concerning the minimum scantlings, result from the local design loads on members in question.

13.1.2. Design load point – point at which the design pressure shall be determined. The load point location shall be determined as follows:

– For horizontally stiffened plates: in the midpoint of non-stiffened field;

– For vertically stiffened plates: at the lower edge of the plate for unsupported edges (e.g. when the thickness is changed within the plate area), or in the distance equal to half of the stiffener spacing above the lower edge for supported edges;

– For stiffeners: in span midpoint; where the pressure distribution along the stiffener span is not linear, the design pressure shall be determined in the middle of the span and as the arithmetic mean of pressures at the stiffener ends, whichever is the greater;

– For girders: in the midpoint of the plating area supported by a girder.

13.2. Framing System

13.2.1. General

13.2.1.1. These provisions regard the transverse framing system of the bottom, sides and decks.

13.2.1.2. Longitudinal or combined framing system is subject to INTLREG consideration in each particular case.

13.2.2. Prescribed Spacing of Structural Members

13.2.2.1. Prescribed spacing of structural members, a_0, in the hull portion between the fore and after peaks is:

$a_0 = 0.36 + 0.004L_0$, [m] (13.2.2.1)

13.2.2.2. In the portion from the after peak to the section at $0.25L_0$ from FP (for-wards), application of other spacing of structural members than prescribed spacing a_0 may be done, the deviation, however shall not exceed 25%. Greater deviations are subject to INTLREG consideration in each particular case. The spacing of structural members shall, generally, not exceed the prescribed value determined in 13.2.2.1, in the portion from the fore peak to the section at $0.25L_0$ from FP (aft) to the collision bulkhead. In each particular case, application of greater spacing is subject to INTLREG consideration.

13.2.2.3. Prescribed spacing of structural members in the fore and after peaks, a_{0s}, is as follows:

a_{0s} = 0.30 m for L_0 < 15 m;

a_{0s} = 0.33 m for 15 m ≤ L_0 < 20 m;

a_{0s} = 0.36 m for 20 m L≤$_0$ < 24 m.

13.2.2.4. Other spacing of structural members than prescribed in 13.2.2.3, the deviation, however shall not exceed 10%, in the fore and after peaks. Greater deviations are subject to INTLREG consideration in each particular case.

13.3. Minimum Thicknesses

13.3.1. General

13.3.1.1. Minimum thicknesses determined shall be applied to steel structural members and they take into account corrosion additions required in Section 2, [2.5] for region B. Thicknesses of higher strength steel structural members are subject to INTLREG consideration in each particular case. To determine minimum thicknesses of structural members within region A, the minimum thicknesses determined according to the requirements specified in Section 2, [2.3] shall be increased by the difference in the corrosion addition required in Section 2, [2.5] for regions A and B. The minimum thicknesses of structural members determined according to the requirements specified may be reduced by the corrosion addition value required in 2.5 for region B, if a ship is intended to be assigned additional mark **PAC** in the symbol of class.

13.3.1.2. Minimum thicknesses of the hull structural members contributing to the longitudinal strength, i.e. structural members of the bottom, decks and sides within 0.1H from the bottom and deck in the mid ship portion of the hull, shall not be less than the values determined according to the following formulae:

– for steel: t = 10.0 a [mm]
– For aluminium alloys: t = 12.0 a [mm] not less, however, than 3 mm unless otherwise specified elsewhere in Part II a – stiffener spacing, [m].

The minimum thickness of structural members shall be increased (or reduced) respectively by the value of Δt determined in accordance with the following formulae, if the stiffener spacing does not appear in the formulae for the minimum thick-ness specified in Sec-13.3 and the applied stiffener spacing is different from that prescribed, a_0 or a_{0s}:

– Between the fore and after peaks:

$\Delta t = 5(a - a_0)$, [mm]

Where:

a – stiffener spacing, [m];

a_0 – prescribed spacing determined in accordance with formula 13.2.2.1;

– in the fore and after peaks:

$\Delta t = 5(a - a_{0s})$, [mm] (13.3.1.2-4)

Where:

a_{0s} – prescribed spacing determined in accordance with the formulae specified in 13.2.3.

If $a < a_0$ and/or $a < a_{0s}$, the fore body plating thickness shall not be reduced within $0.2L_0$ from FP and (or) in way of the after peak.

13.3.1.3. Minimum thicknesses of aluminium alloy structural members shall be determined based on the minimum thicknesses of steel structural members obtained in accordance with the requirements specified in sub-chapters from 13.3.2 to 13.3.6 in accordance with the following formula:

$$t_{al} = \frac{t - t_k}{\sqrt{k_{al}}}$$, [mm] (12.3.1.3)

Where:

t − minimum thickness of a structural member of normal strength structural steel NS, [mm],

t_{al} − required minimum thickness of aluminium alloy structural member, [mm],

k_{al} − material factor for aluminium alloy determined in accordance with formula Sec 2,[2.3.1.3],

t_k − corrosion addition, as required in Section 2,[2.5] for region B, [mm].

13.3.2. Bottom Plating

Minimum thickness of the bottom plating:

– In the forebody, within $0.25L_0$ from FP:

$t = 0.13L_0 + 2.5$, [mm] (13.3.2-1)

– Elsewhere:

$t = 0.10L_0 + 2.3$, [mm] (13.3.2-2)

13.3.3. Side shell Plating

Minimum thickness of the side shell plating:

$t = 0.12L_0 + 2.3$, [mm] (13.3.3)

13.3.4. Deck Plating

Minimum thickness of the strength deck plating:

– Between the ship side and the line of large openings and in the forebody:

$t = 0.065L_0 + 3.2$, [mm]

– in the line of large openings and in the after body:

$t = 0.065L_0 + 2.7$, [mm]

Minimum thicknesses of the second tier deck and platforms:

$t = 0.05L_0 + 2.8$, [mm]

13.3.5. Bulkhead Plating

Minimum thicknesses of:

– – Water tight bulkheads and lubrication oil tank bulkheads:

$t = 0.05L_0 + 5a + 1.25$, [mm]

Not less, however, than:

t = 3.0 mm, for $L_0 < 20.0$ m,

t = 4.0 mm, for 20.0 m ≤ $L_0 < 24.0$ m,

– Bulkheads of tanks other than lubrication oil tanks:

$t = 0.05L_0 + 6.7a + 1.5$, [mm]

not less, however, than 4.5 mm;

– non- watertight bulkheads:

$t = 6.7a$, [mm],

not less, however, than 3.0 mm;

a – stiffener spacing, [m]; a ≤ a_0 to be taken for calculations;

a_0 – prescribed spacing of structural members, determined in accordance with formula 13.2.2.1.

13.3.6. Plating of Decks and Superstructure Walls

Minimum plating thicknesses of the side walls, end walls and decks of super-structures for:

– lower tier:

– forward walls: $t = 0.02L_0 + 3.8$, [mm]

– other walls: $t = 0.02L_0 + 3.0$, [mm]

– higher tiers:

$t = 0.015L_0 + 2.6$, [mm]

– poop open deck, bridge open deck, forecastle open deck:

$t = 0.04L_0 + 3.0$, [mm]

– other decks:

$t = 0.03L_0 + 2.8$, [mm]

Subject to INTLREG consent, the minimum plating thickness of superstructure decks and wall may be reduced by:

Up to 4 mm – for 20.0 m < L_0 □≤ 24 m,

Up to 3 mm□ – for L_0 □≤ 20 m,

Which does not apply to the fore walls of the lower tier and exposed poop deck in ships of L_0 ≥ 20.0 m

13.3.7. Plating Adjoining Structural Members

Thickness of structural members adjoining the plating in way of the structures mentioned in sub-chapters from 13.3.2 to 13.3.6 shall not be less than the minimum plating thickness required in those regions, however not less than 4.0 mm.

13.4. Buckling Control of Structural Elements

13.4.1. Application

The specified requirements in Sec 13, [13.4] shall be applied to the structural elements subjected to axial compressive stress.

13.4.2. Buckling Stress Criteria

Compressive stress shall not exceed critical stress, σ_c, determined according to the following formulae:

$\sigma_c = \sigma_E$, [M Pa], for $\sigma_e \leq \frac{R_e}{2}$ (12.4.2-1)

$\sigma_c = R_e(1 - \frac{R_e}{4\sigma_E})$, [M Pa], for $\sigma_e > \frac{R_e}{2}$ (12.4.2-2)

Where

σ_E – Ideal elastic compressive buckling stress, determined according to the following formula:

$\sigma_E = n\ 0.001\ E\ \frac{I_\alpha}{Al^2}$, [MPa] (12.4.2-3)

n = 1 – where both ends are simply supported,

n = 2 – where one end is simply supported and the other one is fixed,

n = 4 – where both ends are fixed;

l – span of support, cross-tie or panting beam, [m];

I_α – moment of inertia of the compressed pillar, without the corrosion addition, about the axis perpendicular to the expected direction of buckling; for a sup-port being a bulkhead component this is a moment of inertia about the axis parallel with such a bulkhead; for pillars not being connected to any plating this is the minimum moment of inertia of the pillar section (i.e. the principal central moment of inertia), [cm^4];

R_e – pillar material yield point, [M Pa];

A – stiffener cross-sectional area, [cm].

13.5. Hull Plating

13.5.1 Application

The requirements specified in sub-chapter 12.5 shall be applied to determine scantlings of the plating panels subjected to pressure, unless other requirements are specified in chapters from 5 to 9.

13.5.2 Plating Thickness

Thickness of the plating subjected to lateral pressure shall be determined according to the following formula:

$$t = 15.8a\sqrt{\frac{p}{\sigma}} + t_k\ , \qquad \text{[mm]}$$

Where:

a – stiffener spacing, [m];

p – Design pressure acting on the plate in question, [k Pa], to be determined according to the recommendations specified in Chapter 14, [k Pa];

σ – Allowable stress, determined according to the recommendations specified in 12.5.3, [M Pa];

t_k – corrosion addition, determined according to the recommendations specified in 2.5, [mm].

13.5.3 Allowable Stress

13.5.3.1. Allowable stress used in formula 13.5.2 shall be taken according to Table 3.13.1 The values of σ in that table apply to the transverse framing system. For longitudinal framing system, the values of σ are subject to INTLREG agreement in each particular case.

Table 3.13.1: Allowable stress for plating panels

Item	Plating in way of:	σ , [MPa]
1	outer bottom [3]: – in the mid ship portion – in the fore and after peaks	110k 160k
2	side shell [1), 2), 3)]: – in the mid ship portion – in the fore and after peaks	130k 160k
3 3.1 3.2	transverse watertight bulkheads [4] collision bulkhead plating plating of other bulkheads	 160k 190k
4	longitudinal watertight bulkheads [1), 2)]	140k
5	tank bulkheads	
5.1	ballast tank bulkhead plating	140k
5.2	plating of other than ballast tanks	140k
6	strength deck plating [3]: – in the midship portion – in the fore and after peaks	100 k 160k
7	superstructure decks, ‘tween deck and platforms	140k

[1] Values of σ in way of the neutral axis of the hull cross-section are given. Above and below the neutral axis, the σ shall be linearly reduced (if the material factor is constant) to the values for the deck and bottom plating assuming the same stiffening direction and the material factor as for the plating in question.

[2] If a bulkhead or side forms the boundary of tank for which design pressure *p* has been deter-mined according to the rules as p_2, than the allowable stress may be increased to σ = 160 *k*, [M Pa].

[3] The values of allowable stress for the regions between the mid ship portion and peaks shall be determined by linear interpolation.

[4] Design pressures shall be determined according to the rules.

13.6. Stiffeners

13.6.1 Sectional Modulus

Unless otherwise provided in chapters from 5 to 9, sectional modulus of the stiffeners of the plating of decks and bulkheads, together with the effective strake of plating determined in accordance with the requirements specified in sub-chapter 3.2.2 shall not be less than that determined in accordance with the following formula:

$$W = \frac{1000\, a\, p\, l^2}{m\sigma} . w_k \text{ , [cm}^3\text{]}$$

However not less than 5 cm^3;

a – stiffener spacing, [m];

p – Design pressure determined in accordance with the requirements specified in Chapter 14 (see also 13.1.2), [k Pa];

l – Stiffener span determined in accordance with the requirements specified in sub-chapter 3.2.1, [m];

m – bending moment factor, each time determined in the chapters regarding construction of the relevant regions of the ship hull;

σ – Allowable stress of the values taken in accordance with Table 3.1.3.1;

w_k – corrosion addition factor.

The value of factor w_k for rolled section stiffeners shall be taken as follows:

– for angle bars, T-bars, I-bars and channel bars:

$w_k = 1 + 0.1 t_k$.

– for bulb bars:

$$w_k = 1 + 0.06\, t_k$$

t_k – corrosion addition, see Section 2, [2.5 or 2.6.]

Where flat bars or fabricated sections are used as stiffeners, the required value of sectional modulus shall be determined in accordance with formula 12.6.1-1 for w_k = 1, and then the stiffener wall thickness shall be increased by corrosion addition required in sub-chapter 2.5. Where corrosion addition is not required, w_k = 1.

13.6.2 Allowable Stress

13.6.2.1. Allowable stress of stiffeners shall be taken in accordance with Table 3.13.1 – for stiffeners of hulls with transverse system of stiffeners. For longitudinal system of stiffeners, the values of σ are subject to INTLREG agreement in each particular case.

Table 3.13.1 Allowable stress for stiffeners

Item	Region of stiffeners and load type	σ , [M Pa]
1	2	3
1.	Frames	
1.1	Main frames – load induced by outside pressure	185 k
1.2	Main frames – load induced by stores and ballast	140 k
1.3	Main frames – load induced by hydrostatic pressure at $T = T_{max}$	120 k
1.4	Frames on ‘tween deck – load induced by outside pressure	185 k
1	2	3
1.5	Frames on ‘tween deck – load induced by stores and ballast	140 k
1.6	Frames in superstructures	160 k
2	Transverse watertight bulkheads – load induced by ballast, liquid cargo or in damaged condition	
2.1	Collision bulkhead stiffeners – load induced by ballast or liquid cargo	160 k
2.2	Collision bulkhead stiffeners – in damaged condition	160 k
2.3	Stiffeners of other bulkheads – load induced by ballast or liquid cargo	160 k
2.4	Stiffeners of other bulkheads – in damaged condition [1)]	190 k
3.	Stiffeners of longitudinal bulkheads stiffened transversely – load induced by ballast, liquid cargo or in damaged condition [1)]	140 k
4.	Deep tank bulkheads	

4.1	Vertical stiffeners	140 k
4.2	Tank top horizontal stiffeners	140 k
5.	Strength deck beams and 'tween deck beams [2]:	
5.1	– in the midship portion	140 k
5.2	– in the fore and after peaks	160k
6.	Superstructure deck beams	160k

[1] Design pressures shall be determined in accordance with the requirements specified in the rules.

[2] Allowable stress values between the mid ship portion and peaks shall be determined by linear interpolation.

13.6.2.2. Stiffeners and plating shall generally be of steel with the same yield stress. Application of the value of σ corresponding to the plate material shall be done, if the stiffener is of a greater value of yield stress than that of the plating. The value of σ for the stiffener may be multiplied by a factor determined according to the following formula, if the calculated stress in the plating is less than the applicable limit:

$$f_k = \frac{k_u}{k_p} \quad (12.6.2.2)$$

Where:

k_u – stiffener material factor;

k_p – plating material factor.

13.6.3 Buckling Strength of Stiffeners

Proportions of the scantlings of stiffener webs and flanges shall fulfill the following conditions to make their buckling strength acceptable:

– For steel:

Webs: $\frac{h_s}{t_s} \leq \frac{60}{\sqrt{k}}$

flanges: $\frac{b_m}{t_m} \leq \frac{15}{\sqrt{k}}$

– For aluminium alloys:

Webs: $\frac{h_s}{t_s} \leq \frac{50}{\sqrt{k_{al}}}$

flanges: $\frac{b_m}{t_m} \leq \frac{12}{\sqrt{k_{al}}}$

Where:

h_s, t_s – web net height and thickness, [mm];

t_m – net thickness of flange, flat bar, angle bar flange etc., [mm];

b_m – part of flange width (angle bar flange etc.) extending beyond the web on the one side (for asymmetrical web this is the greater dimension of the ex-tending parts), [mm].

For flat bars used as stiffeners, the criteria for stiffener webs apply.

13.7. Girders

13.7.1. Strength of Girders

13.7.1.1. Specification of the requirements regarding the strength and construction of simple girders (e.g. web frames, deck stringers, hatch end beams, etc.) are provided in chapters in the various chapters.

13.7.1.2. Allowable stress values for service loads as specified in the concerned sections for net scantlings of girders and effective strakes of plating (i.e. exclusive of the corrosion additions required in Section 2,[2.5] determined by direct calculations are as follows:

– bending stress: σ = 160 k, [M Pa];

– Mean shear stress in web (for the effective cross-sectional area determined in accordance with 3.2.3): τ = 90 k, [M Pa];

– Equivalent stress: σ_{zr} = 180 k, [M Pa].

Equivalent stress shall be determined in accordance with the following formula:

$$\sigma_{zr} = \sqrt{\sigma^2 + 3\tau^2}$$

Where:

σ – normal stress, [MPa];

τ – mean shear stress in web, [MPa].

13.7.1.3. For longitudinal girders, INTLREG may require reduction of allowable stress values σ specified in 13.7.1.2 to take the stress due to hull girder bending into account.

13.7.1.4. Net thicknesses of girder webs and girder flanges shall be increased by corrosion additions in accordance with the requirements specified in 2.5.

13.7.2. Buckling Strength of Girders

Proportions of the scantlings of girder webs and flanges shall fulfill the following conditions to make their buckling strength acceptable:

– For steel:

webs: $\frac{h_s}{t_s} \leq \frac{60}{\sqrt{k}}$

flanges: $\frac{b_m}{t_m} \leq \frac{15}{\sqrt{k}}$

– For aluminium alloys:

webs: $\frac{h_s}{t_s} \leq \frac{50}{\sqrt{k_{al}}}$

flanges: $\frac{b_m}{t_m} \leq \frac{12}{\sqrt{k_{al}}}$

Where:

h_s, t_s, – web net height and thickness, [mm];

t_m – flange net thickness, [mm];

b_m – part of flange width extending beyond the web on the one side (for asymmetrical web this is the greater dimension of the extending parts), [mm].

13.8. Pillars and Supporting Members

13.8.1 Application

The requirements specified in 13.8 shall be applied to members subjected to compressive axial stresses: deck pillars, vertical stiffeners and bulkhead girders supporting deck structures, panting beams in peaks and cross-ties in tanks.

13.8.2 General Requirements

13.8.2.1. Strengthening of the Deck stringers and web frames shall be done with brackets in way of their connection to pillars.

13.8.2.2. Pillars shall be arranged on bottom floors, bottom girders or on their inter crossings.

13.8.2.3. In addition to pillars supporting deck girders, additional pillars may be required under deckhouses, windlasses, etc.

13.8.3 Pillars and Supporting Stiffeners

13.8.3.1. Compressive stress σ in pillars, cross-ties and supporting stiffeners to be determined in accordance with the following formula:

$\sigma = \frac{10\,p}{Ak_1}$, [M pa]

shall not exceed the critical buckling stress σ_c determined in accordance with the requirements specified in 13.4.2, where:

A – pillar cross-sectional area, [cm^2];

$k_1 = \frac{k_2}{1+\frac{l}{i}}$, however not less than 0.3;

k_2 = 0.5 – for supporting members of weather deck within x ≥ 0.4 L_0, as well as for cross-ties and panting beams in side tanks and peaks,

k_2 = 0.6 – for supporting members of weather deck when sea loads are applied,

k_2 = 0.7 – in other cases;

$i = \sqrt{\frac{I_\alpha}{A}}$ radius of gyration of the supporting member net cross-section, [cm];

I_α – moment of inertia, without corrosion allowance, about the axis perpendicular to the expected direction of buckling, i.e. perpendicular to the plating, [cm^4];

l – span of a pillar, cross-tie or panting beam, [m];

P – design axial force in pillar determined in accordance with the following formula:

$P = b\,l_1\,p + \Sigma_i\,(b\,l_1\,p)_i$, [kN]

p – design pressure on decks determined in accordance with the rules, [k Pa];

$\Sigma_i\,(b\,l_1\,p)_i$ – the sum of loads induced by the pillars located above which may transmit the load on the pillar in question;

l_1 – distance measured on deck stringers between their mid-span points, [m];

b – Average breadth of deck portion supported by the pillars, taking account of the cargo hatches in the relevant hull portion, [m].

13.8.3.2. Wall thickness of tubular pillars shall not be less than that determined in accordance with the following formula:

$T = \frac{D}{50} + 3,0$, [mm]

D – pillar outside diameter, [mm].

13.8.3.3. Web thickness of pillars made of sections (box sections, channel sections, I-sections, etc.) shall not be less than that determined according to the following formula:

$$T = \frac{b}{50}, \qquad [\text{mm}]$$

b – Pillar web height, [mm].

13.8.3.4. In general, pillar wall thickness shall not be less than 4.5 mm; however, maintenance of the required cross-sectional area of the pillar shall be done.

13.8.4 Bulkhead Pillars

Stiffeners of bulkheads supporting decks shall be considered as pillars which are subject to the requirements specified in 13.8.3.1 and the radius of gyration of the stiffener cross-section shall be determined taking into account the effective strake of plating having 20t in width on each side of the stiffener, where t represents the bulkhead plating thickness, [mm]. The requirements shall also be fulfilled, those are specified in 13.8.3.3.

13.8.5 Pillars in Tanks

13.8.5.1. If hydrostatic load may induce tensile stress in the pillar, cross-sectional area, A_p, of such a pillar shall not be less than the value determined in accordance with the following formula:

$A_p = 0.07 F_p p_p$, [cm^2]

F_p – pillar-supported area, [m^2];

p_p – design pressure inducing tensile stress in pillar, [kPa]

13.8.5.2. Construction of pillars in tanks shall be done by bars, plates or open sections.

13.8.5.3. Fixing of pillars shall be done with brackets at their both lower and upper ends.

13.9. Brackets

13.9.1 Application

The requirements specified in 13.9 shall be applied to brackets connecting stiffener and girder ends to other structures.

13.9.2 End Connections of Stiffeners

13.9.2.1. In general, connection of all types of stiffeners shall be done at their ends with brackets In special cases, permission for bracket less connections may be provided, e.g.:

– Stiffener end joint is welded with full penetration or an increased fillet weld is made;
– Fixing of stiffener lower end is done with continuous flat bar welded to the stiffener face plates and to the plate on which the stiffener terminates;
– Stiffener ends are snipped.

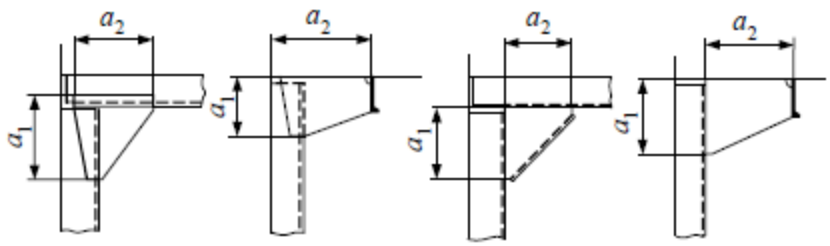

Figure 3.13.1: End connections of stiffeners

13.9.2.2. Stiffeners with snipped ends may be used in the areas where low dynamic loads may be expected and where vibration is insignificant. The condition is that the supported plating thickness be not less than that determined in accordance with the following formula:

$$t = 1.25\sqrt{\frac{(l-0.5a)ap}{k}} + t_k \text{ ,[mm]}$$

Where:

l – Stiffener span, [m];
a – stiffener spacing, [m];
p – Design pressure acting on the plating supported by the relevant stiffener, [k Pa].

13.9.2.3. Sectional modulus of the stiffener defined in 13.9.2.2 shall be determined according to the formula in 13.6.1-1 taking m =7.5 and σ = 140k, [M Pa].

13.9.2.4. Utilization of bracket less connections may be done for stiffeners which are continuous through structural members (web frames, deck girders, bulkheads) provided that adequate welded joints are applied.

13.9.2.5. It is recommended that manufacturing of brackets shall be done of a material having the same yield point as the material of the attached structural members.

13.9.2.6. Bracket thickness, t_w, shall not be less than that determined according to the following formula:

$$t_w = \frac{3+k_1\sqrt{W}}{\sqrt{\frac{k_w}{k_u}}} + t_k \text{ , [mm]}$$

Where:

W – Prescribed sectional modulus of the smaller stiffener, [cm^3];

k_1 = 0.2 for brackets with flange or face plate on the free edge,

k_1 = 0.3 for brackets without flanges or face plates;

k_w – bracket material factor (see 2.2 and 2.3);

k_u – stiffener material factor (as above);

t_k – corrosion addition, determined in accordance with Section 2, 2.5 or 2.6.

The bracket thickness that is applied, t_w, shall not be less than that of the connected stiffeners' webs, however not less than 5 mm unless provided otherwise elsewhere in the Rules.

13.9.2.7. Characteristic bracket arm length a_w determining the required values of a_1 and a_2 as shown in Figure 3.13.1 shall not be less than that calculated according to the following formula:

$$a_w = c\sqrt{\frac{W}{t_w}}, \text{[mm]}$$

Where: W, t_w – see 13.9.2.6;

c = 70, for brackets with flange or face plate on the free edge,

c = 75, for brackets without flanges or face plates.

Arm length, a_w, of the brackets connecting structural members shall not be less than 1.5 times the depth of the stiffener web connected. The sum of bracket arms shall not be less than $2a_w$ and the length of the shorter arm shall not be less than $0.75a_w$, if the bracket arms have different lengths a_1 and a_2.

Height of the bracket triangle shall not be less than $0.75a_w$ or increasing of the length of its one or both arms shall be done. The bracket arms may be reduced by 25%, if structural members are interconnected by welded joints and brackets have face plates or flanges (see patterns b) and c) in Figure. 3.13.2). In areas where increased vibration of stiffener connection – e.g. of the shell plating and deck plating – may be expected, arrangement of such connections shall be done according to the patterns

a), b) or c) shown in Figure. 3.13.2. In pattern as shown in Figure. 3.1.3.2 c) where one stiffener's end is welded to the plating and to the other stiffener, face plates of stiffeners having a form of an angle bar or T-bar shall have snipped ends in way of the connection.

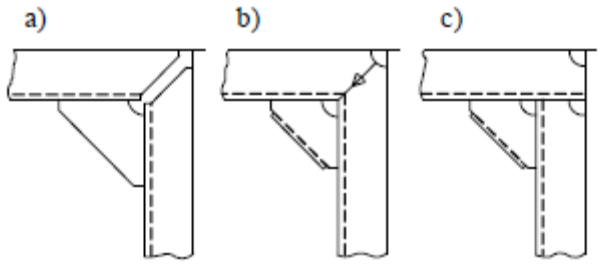

Figure 3.13.2: Recommended patterns of stiffener connections in areas where increased vibration may be expected

13.9.2.8. Where the bracket free edge length is more than $50t_w$ (t_w – bracket thickness), such an edge shall have a flange or face plate of the width not less than that determined according to the following formula:

$b = 40(1 + \frac{W}{1000})$, [mm] not less, however, than 50 mm; for W – see 13.9.2.6.

13.9.2.9. Free ends of bracket asymmetrical face plates or flanges shall be snipped to the width not greater than 15 mm. The length of the snipped part shall be approximately the same as the width of face plate. Free ends of bracket symmetrical face plates shall be snipped on both sides at the angle of 30°, and the snipped part height shall not exceed $3t_w$.

13.9.3 End Connections of Girders

13.9.3.1 Provision of brackets shall be done at the ends of girders or connections between girders forming frame systems. Application of bracket less connection may be done provided arrangement of adequate support of adjoining face plates is done.

13.9.3.2 Thickness of the girder brackets shall not be less than that of the girder web plate.

13.9.3.3 Girder brackets shall have along their free edges the face plates with cross-sectional area not less than:

$A_{mw} = 10\, l_w\, t_w$, [cm^2] Where:

l_w – bracket free edge length, [m];

t_w – bracket thickness, [mm].

13.9.3.4 Bracket arm length, increased by the girder depth, shall be determined according to the formula 13.9.2.7, taking into account the following:

W – required section modulus of the girder connected with bracket, [cm^3];

t_w – bracket thickness, [mm];

c = 63 for bracket of bottom and deck girders,

c = 88 in other cases.

CHAPTER 4 EQUIPMENT, ARRANGEMENTS AND OUTFIT

CONTENTS

SECTION 1 GENERAL

Contents

1.1. Application

1.1.1. The requirements of the present part of the Rules apply to craft equipment, arrangements and outfit used on small pleasure craft.

1.1.2. Scope of application is defined more exactly in the relevant paragraphs of the present part.

1.1.3. The cargo handling gear specified in 1.3.1.6 shall comply with the requirements of the Rules for the Cargo Handling Gear of Sea-Going Ships.

1.2. Definitions and explanations

1.2.1. The following definitions and explanations are used in the present part of the Rules:

Bitt is the steel or iron bollard placed on craft deck to fix the towing rope or anchor cable.

Windlass is the anchor mechanism with the horizontal axis of rotation of the driving shaft intended for anchoring and weighing as well as for hauling in anchor cables.

Oar is a device for rowing which has a blade to create thrust. There may be a single-blade or double blade oars and single-bank oars.

Auxiliary steering gear is the equipment other than any part of the main steering gear necessary to steer the craft in the event of failure of the main steering gear, but not including the tiller, quadrant or components serving the same purpose.

Retractable steering propeller (RSP) is the azimuthing thruster which design enables to lift propeller inside the craft hull in non-operating condition.

Main steering gear is the machinery, rudder actuators, steering gear power units, if any, ancillary equipment and the means of applying torque to the rudder stock (e.g. tiller or quadrant) necessary for effecting movement of the rudder for the purpose of steering the craft under normal service conditions.

Main steering gear may be power-operated or hand operated one.

Cargo handling gear is an arrangement necessary for moving various cargoes by craft means.

Propulsion steering system (PSS) is the propulsion and steering element of a craft. Oars, sail, rudder, azimuthing thrusters, vane propellers, thrusters and outboard motors.

Hull fittings are auxiliary items of rigging which serve for fixing and passage of rigging: bitts; blocks, bollards, deck organizers, eyebolts, rollers for passage of rigging under deck, mooring cleats, lever stoppers, rigging shackles etc.

Closing arrangement is an arrangement intended for closing openings in hull or in craft superstructure: shell doors, cargo hatch covers, doors, companion hatches and skylights, windows etc.

Fairlead is the steel or iron casting of special form put on the bulwark gunwale and intended for directing the mooring cable to the bollard or capstan drum. It may have either simple design or be fitted with rollers to reduce wear of mooring cables.

Bollard is the steel or iron (cast or welded) bollard for fixing lines onboard. The bollard may be single head, double head and cross bollard.

Vertical-axis propeller is the propeller with the vertical axis of rotation consisting of the vertical blades fixed on the rotating drum located flush with the craft bottom.

Guard Rails is a barrier on open deck consisting of posts and ropes or tubes extended between them.

Pulpit is a rigid frame railing. Sailing Rig is a set of arrangements assisting a craft to keep a course to steer using the wind energy.

Azimuth thruster (AZIPOD type) is an open or ducted propeller fitted on a arrangement rotating 360 degrees around the vertical axis. Azimuth thrusters of great power may be used as the main propulsion and steering unit.

Thruster is a transverse tube in a craft hull with a propeller inside.

Railing is a tube rail. Rudder and steering gear is an arrangement intended for craft steering and keeping it on its course. Rudder is one or several bearing surfaces (wings or plates) which angle in respect to the craft centerline plane (deflection angle) may be changed by craft master.

Balanced rudder is the rudder part of which is located on the leading edge of the rudder to reduce the spindle torque.

Unbalanced rudder is the rudder which rudder stock axis coincides with the leading edge of rudder or passes in close vicinity to it.

Streamlined rudder is the rudder with the symmetrical aviation profile in the transverse section.

Plate rudder is the rudder of the easiest design which transverse section is the fl at plate.

Suspended rudder is the rudder which is fixed to the rudder stock only in the upper part.

Semi-spade rudder is the rudder which upper part is fixed to the rudder stock, in the middle part it has one or several attachments to horn/rudder post or stern tube and it has no support in the lower part (rudder heel).

Simple rudder is the rudder which is fixed to the rudder stock in the upper part and it is supported in the lower part (rudder heel) and it may have one or several attachments to horn/rudder post or stern tube in the middle part if placed after them.

Power actuating system is the hydraulic or mechanical equipment provided for supplying power to turn the rudder stock or steering nozzle comprising a steering gear power unit or units, together with associated pipes and fittings, and rudder deflection servo or steering nozzle. The power actuating systems may share common mechanical nodes, i.e. tiller, quadrant and rudder stock or nodes serving the same purpose.

Steering gear power unit: in the case of electrical steering gear it is an electrical motor and its associated electrical equipment; in the case of electro hydraulical steering gear it is an electrical motor and its associated electrical equipment and connected pump; in the case of hand-operated hydraulic steering gear it is a hand-operated gear and connected pump.

Steering gear control system is the power driven device used together with the main steering gear to transmit commands from the navigating bridge to steering gear power units. The steering gear control systems comprise detectors, receivers, hydraulic control pumps and their associated motors, motor controllers, piping and cables.

Active means of craft's steering (AMSS) are the special propulsion and steering units and any combination of them or with main propulsion devices capable to create thrust or traction force both at a fixed angle to the centre line plane of the craft and at the variable angle either under all running conditions or part thereof including slow speed and zero speed. The active means of craft's steering comprise fixed and retractable steerable propellers, water jets, thrusters, outboard electric motors and other devices of similar purpose.

Stoppers are the special devices to hold an anchor in the deck organizer in-stow and holding of the chain cables during anchorage.

Safety harness (lifebelt) is a set of belts connected against each other which man puts on together with safety line with snap shackles on both ends, one of them is attached to the safety belt and the other –to the element rigidly fixed on a craft (on deck, deckhouse, superstructure etc) and intended for assuring safety during crew work on deck under the hard storm conditions.

A craft arrangement is a set of the craft equipment and service mechanisms intended to assure the required operating and navigational properties of craft.

Transom rudder is a plate rudder located on craft transom.

Lanyard is a rope strainer used on crafts instead of the stretching screw to assure rail rope or lashing tension.

Mooring cleat is a steel, iron or non-ferrous metal casting of the special form intended for fastening of the steel mooring ropes at least 8mm diameter and fibre and synthetic ropes of at least 60 mm circumference.

Mooring and towing arrangement is the arrangement intended to provide safe moorage of a craft by berth or any other floating structure (craft, moorings, floating landing stage) as well towing assistance to any other similar craft or her own towing by another craft.

Mooring pipe is the steel or iron casting with the oval whole fitted in the craft bulwark or on deck and it is intended for directing the mooring rope to the bollard.

Centre board, bilge board is a wing casted outboard of small crafts to reduce their drift.

Steering bilge board is an attachable part of rudder intended to enlarge the rudder body when sailing conditions demand.

Mooring windlass is a mooring mechanism with the vertical axis of rotation of the driving shaft intended for hauling in a rope to draw a craft nearer to berth.

Vertical shaft windlass is an anchor mechanism with the vertical axis of rotation of the driving shaft intended for anchoring and weighing as well as for hauling in anchor cables.

Anchor gear – is an arrangement serving for the safe anchorage of a craft at sea, on road stead and other places far from shore by means of securing to the ground by an anchor and anchor cable (cable or rope).

Cable pipes are the special castings fitted on deck and onboard to direct the anchor cable.

1.3. Scope of survey

1.3.1. During manufacture the register is liable to do the survey of the following parts of craft arrangements:

1.3.1.1. Steering gear:

a) Rudder stocks;

b) Rudder blade;

c) Rudder axles;

d) Pintles of rudders and steering nozzles;

e) Bushes of pintles;

f) Fastening of the rudder stocks, rudder stock with rudder blade steering nozzles and also of rudder axle with stern frame (muff couplings, keys, bolts, nuts etc.);

g) Parts of the system of rudder stops;

h) Rudder stock bearings;

i) Rudder trunk.

j) Details hand-operated rope steering gear;

k) Details and nodes of hand-operated shaft steering gear;

l) Details and nodes of hand-operated remote steering gear.

1.3.1.2. Anchor arrangement:

a) anchors;

b) Chain cables or ropes;

c) Anchor stoppers;

d) Devices for securing and releasing the inboard end of chain or rope;

e) Anchor deck organizers.

1.3.1.3. Mooring arrangement.

a) Mooring ropes;

b) Mooring bollards, belaying cleats, fairleads, deck organizers, rollers and stoppers.

1.3.1.4. Towing arrangement:

a) Tow lines;

b) Towing bollards, bitts, fairleads, deck organizers and stoppers;

1.3.1.5. Spars and rigging:

a) Standing and running spars;

b) Standing and running rigging;

c) Sails;

d) Cable plates, parrals, bollards, belaying cleats, fair-leads, rollers and stoppers;

e) Signal masts.

1.3.1.6. Cargo-handling gear within scope set forth in the Rules for the Cargo Handling Gear of Sea-Going Ships including the following:

a) Craft cargo derricks, cranes and hoists with the carrying capacity of 1t and more;

b) Craft electric traction elevators which are intended for lifting and lowering of people and/or cargoes in a cage moved by the ropes at a speed of not more than 1.0 m/s;

c) Craft elevating platforms which are lifted and lowered at a speed of not more than 0.1 m/s.

1.3.1.7. Closing appliances:

a) All closing appliances located on the craft outer hull surfaces, superstructures and deckhouses;

b) All closing appliances located inside craft in the watertight structures.

1.3.1.8. Equipment of craft spaces:

a) Stairways and vertical ladders;

b) Guard rails, bulwark and gangways.

1.3.2. Survey of products listed in 1.3.1.1.e, 1.3.1.1.h, 1.3.1.1.i, 1.3.1.1.j, 1.3.1.3.e, 1.3.1.3.b, 1.3.1.4.b, 1.3.1.5.c, 1.3.1.5.d and 1.3.1.9 by the Register is limited to review of the technical documentation.

1.3.3. As per the specification in 1.3.1 For items, the following documents shall be submitted to the Register:

a) Assembly drawing;

b) Gears and arrangements calculations;

c) Drawings of nodes and details if they are manufactured according to standards or technical conditions which are not agreed with the register.

1.3.4. During manufacture, materials used for items specified in 1.3.1.1.a– 1.3.1.1.d, 1.3.1.3.a, 1.3.1.3.b, 1.3.1.3.a, 1.3.1.4.a, 1.3.1.6, 1.3.1.7, are needed to be surveyed by INTLREG.

1.3.5. When the craft is under construction, the following arrangements, equipment and outfit are needed to be surveyed by the Register :

a) Rudder and steering gear;

b) Anchor arrangement;

c) Mooring arrangement;

d) Towing arrangement;

e) Rigging;

f) Cargo-handling gear;

g) Signal masts;

h) Closing appliances;

i) Emergency outfit.

1.4. Materials and welding

1.4.1. In compliance with the requirements listed in the documentation of the design approved by the Register, materials for manufacture of the arrangements, equipment and outfit if not clearly specified in the Rules are required to be confirmed.

1.4.2. In accordance with the requirements of part XIV “Welding”, Rules for the Classification and Construction of Sea-Going Ships, welding of structural elements of craft’s arrangements, equipment and outfit is to be carried out.

1.5. Inertial loads

During Craft movement inertia loads arising at seaways shall be taken into consideration in calculation of craft’s arrangements.

The value of inertia loads is derived by an acceleration arising at craft’s motions in waves.

Chapter 3 describes method to calculate to inertia. The requirement for evaluation of acceleration at motions in waves is a subject of the special consideration by the Register in case by case.

1.6. Special strong structures

1.6.1. It is essential that Anchor, mooring and towing arrangements shall have strong design to sustain forces acting in ropes and cables. In the meantime, utilization of the structures of strong design of anchor and mooring arrangements may be done in the towing arrangement.
In these arrangements tensile strength of ropes/cables usage shall not exceed 80 per cent ultimate load of the corresponding strong design structure.

In accordance with ISO 15084:2003 there shall be at least the following number of the strong design structures:

a) At all craft one strong design structure in the fore end for anchor and towing arrangements;
b) On craft which length is l_h > 6 m at least one strong design structure for mooring arrangement in the aft;

c) On craft which length is l_h > 12 m at least one additional structure in addition to those specified in 1.6.1.1 or 1.6.1.2, strong design structure for the mooring arrangement in the fore end and in the aft;

d) On craft which length is l_h > 18 m at least one additional structure in addition to those specified in 1.6.1.3, strong design structure for the portside and starboard mooring arrangement.

1.6.2. In respect of assignment of dimensions, strengthenings, corrosion resistance and marking Requirements of ISO 15084:2003 are required to be taken into consideration in the design of strong structures.

1.7. Guidelines for the craft owner

1.7.1. In compliance with the ISO 15084:2003, the following information shall be given in the Guidelines for the craft owner needed to be confirmed in respect of the anchor and mooring/towing arrangement:

a) Information on the ultimate (breaking) load of strong (carrying) structures of the anchor and mooring/ towing arrangements;

b) Information on assignment of strong design structure if marked by the ship yard in cases when its purpose is not evident (for instance: strong design structure is intended for anchoring and/or towing);

c) Recommendations on necessity of towing of another craft or towing of its own craft at slow speed and warning on observing the speed limit during towage of the water displacing craft;

d) Recommendations on the method of securing the towing rope to be able to pay it off under load;

e) Information about responsibility for the supply of a craft with the relevant mooring and towing ropes, anchor cable, anchor ropes and anchor. It is essential that tensile strength of the mooring and towing ropes, anchor ropes and cables shall not exceed 80 per cent breaking force of the relevant strong design structure.

It is upon the Craft owners' consideration that what actions will be needed to fix a towing rope onboard;

f) Information on used non-metal strong design structures. It is required to take into account of the limited service life of the non-metal strong design structures. As soon as any signs of deterioration, visible surface cracks or residual deformation appear they are required to be replaced.

Note: Dark products are less exposed to fracture caused by the UV rays than the light products.

SECTION 2 STEERING GEAR

Contents

2.1. General

2.1.1. In accordance with the Register's approval each craft shall have a reliable steering gear, enabling its maneuverability and course-keeping qualities under design operating conditions. Such arrangements will be steering gear, vane propeller, azimuth thruster (AZIPOD type), outboard motor (motors) and other arrangements.

Birth connected craft may not have the steering gear.

According to the register's discreet, considering the area of navigation and operating conditions installation of the non-self-propelled craft may not be fixed with the steering gear or only stabilizer may be installed. Design category, area of navigation and operating conditions of the non-self-propelled craft which allow absence of the steering gear or installation of stabilizers only is a subject of the special consideration by the Register in case by case.

2.1.2. Position of helmsman is to provide proper vision around the craft. If proper view is not possible from the emergency control station then there shall be a voice contact with a member of the crew who has such view.

2.1.3. By deflection of the rudder blade (blades), steering oar, rotation of the water-jet nozzle, change of the thrust vector of outboard motor and stern drive or by other methods the craft is driven. Rudder blade may be rotated by tiller or by steering gear. Provision of the steering tiller or other mechanical arrangement shall be made for the emergency operation (except for craft of design categories **R0**, $\mathbf{C_1}$, $\mathbf{C_2}$, $\mathbf{C_3}$ and **D**).

2.1.4. The helmsman personally or by means of the indicator shall view the deflection angle of rudder blade (or direction of thrust vector).

2.1.5. Design of the steering gear shall be done in such manner so that it has easy access for control and maintenance of some elements. There should be no equipment and outfit positioned close to the steering gear that may obstruct operation of this arrangement. Design of the steering gear shall be made in such way so that the rudder blade doesn't intrude the hull plating preventing damage to any element of the steering gear.

2.1.6. The present section covers the requirements that deal with the steering gear that has rudders listed on fig. 4.2.1. Recommendations have been done to deal with the requirements set forth in 2.2, Chapter 4, "Equipment, Arrangements and Outfit", Rules for the Classification and Construction of Sea-Going Ships to nozzled steering gears and rudders which design differ from those given on fig. 4.2.1.

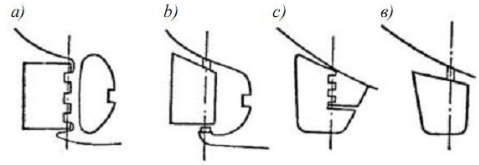

Fig. 4.2.1 Types of rudders:

a – Ordinary unbalanced multi pintle rudder;

b – Ordinary balanced rudder;

c – Semi-spade balanced rudder;

d – Suspended balanced rudder.

Unusual steering gears: Rudders with rotor, flap-type rudder, multi-blade rudders like Enkel rudders etc., as well as the azimuth thruster (AZIPOD type), vane propellers etc., in each case are a matter of the special consideration by the Register.

It may be permitted upon approval by the Register that the regulated steerability of a craft at slow speed is provided by simultaneous action of the means as listed in 2.1.1 and active means of craft's steering (AMSS) considering the purpose, special features of a craft and intended regimes of its operation.

2.1.7. In any case the rudder shall have at least two supports, meanwhile, depending on type of the steering gear, the rudder heel pintle may be one of the supports (lower). Permission is not given to use the power system as a support (steering gear actuator) unless it is not envisioned for the said purpose.

The register shall not regulate the number of rudder pintles which serve as a support for its blade.

2.1.8. It is essential to check the specific pressure which shall not exceed values given in the Table 4.2.1 and the specific pressure of rudder pintles and rudder stock bearings.

Table 4.2.1

Frictional couple's material	**Specific pressure *p*, M Pa, if lubricated by**	
	water	oil
Stainless steel or bronze against lignum vitae	2.4	–

Stainless steel or bronze against textolite or synthetic materials	Upon special agreement with the Register	–
Stainless steel against bronze or vice versa	6.9	–
Steel against the white metal	–	4.4

2.2. Initial Design Data

2.2.1. In this chapter the specified initial design data are valid only for the choice of scantlings of ordinary rudders and nozzle rudders with rigidly fixed stabilizers and cannot be used for determination of steering gear output characteristics. The register does not regulate methods of determination of these characteristics and the appropriate calculations need not to be approved by the Register. The Register checks the steering gear during sea trials of the ship in order to make sure that the steering gear output characteristics fulfill the requirements of 2.9.2, 2.9.3 and 2.9.8.

2.2.2. Rudder force and rudder torque

2.2.2.1. The rudder blade force *F*, H, acting on the rudder blade at headway movement is to be derived by formula:

$$F = K_1 K_2 V_0^2 \mathrm{A}_0 , \qquad (2.2.2.1)$$

where K_1 is the coefficient calculated according to table 4.2.2;

λ is the relative elongation of the rudder blade, $\lambda = b^2/\mathrm{A}_o$;

b = is the mean height of the submerged part of the rudder blade, m;

A_o = is the effective square of rudder together with horn (skeg), m^2;

A_o = A for structures shown on Fig. 4.2.5 and 4.2.8;

$\mathrm{A}_o = \mathrm{A} + \mathrm{A}_{st}$ for structures shown on fig. 4.2.6, 4.2.7 and 4.2.9;

A = square of rudder blade, m^2, (for transom rudder only square of the submerged part of it);

A_{st} = square horn (skeg) of rudder, m^2;

K_2 = coefficient taken according to table 4.2.3, where Δ – is the water displacement in tons at draught to the design waterline;

V_o = is the design craft velocity (knots) depending on the type of craft according to 2.2.2.2.

Table 4.2.2 K_1 coefficients for rudders of different elongation

λ	0.5	1.0	1.5	2.0	2.5	3.0	3.5	4.0
K_1	61	93	113	126	135	140	141	141

Table 4.2.3 K_2 coefficient for craft of various types

Type of craft	K_2
Motor craft	1.2
Non-self-propelled crafts	1.1
Sailing craft, sailing-motor craft and motor-sailing craft: $L_{wl}/3\sqrt{\Delta} \le 6$ $L_{wl}/3\sqrt{\Delta} > 6$	1.6 0.11+ 0.25L_wl /3√Δ

2.2.2.2. Design craft speed, V_o (knots) whichever is greater:

$$V_0 = 2.7\sqrt{Lwl} \text{ or } V_0 = V_{max},$$

where V_{max} = is the actual maximum speed of craft (knots).

2.2.3. Bending moments acting upon the rudder blade.

2.2.2.3. Balanced three pintle rudder.

The below mentioned formula calculates the maximum value of the bending moment M_1 (N m) acting upon the rudder blade:

$$M_1 = 0.125F \cdot b.$$

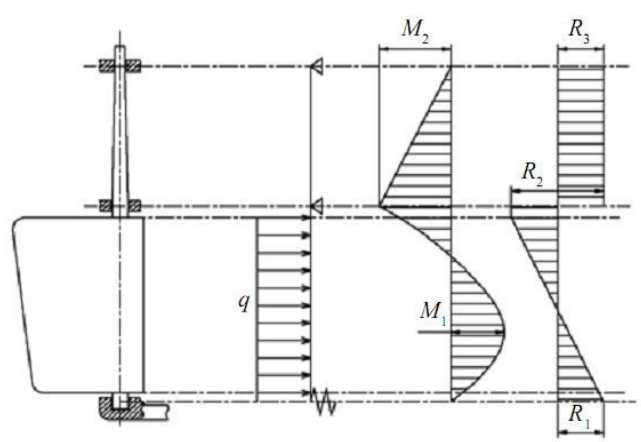

Figure 4.2.2

Load, bending moments and transverse forces in the balanced rudder with rudder heel

The maximum value of the bending moment of the rudder stock (N m) on the centre pintle is to be calculated by formula:

$$M_2 = 0.14F \cdot b,$$

where F = is the design hydrodynamic load (H) according to 2.2.2.1;

b is the mean height of the submerged part of the rudder, m.

2.2.3.1. Balanced suspended rudder.

The value of the bending moment M_1 (N m) in the arbitrary horizontal section of the rudder blade is to be derived by formula:

$$M_1 = \frac{FA_b \cdot h_1}{A},$$

where F = is the design hydrodynamic load (H) according to 2.2.2.1;

A_b = square, m^2, of the part of rudder blade below the section in question;

h_1 = is the vertical distance (m) from the centre of gravity of the cut area A_b to the section in question;

A = square of the rudder blade (m^2) according to 2.2.2.1.

The value of the bending moment in the rudder stock, M_2 (Nm) in the area of the lower bearing is to be calculated by formula:

$$M_2 = F \cdot h_2,$$

Where F = is the design hydrodynamic load (H) according to 2.2.2.1;

h_2 = is the vertical distance (м) from the centre of gravity of the square of rudder blade to the centre of the lower bearing.

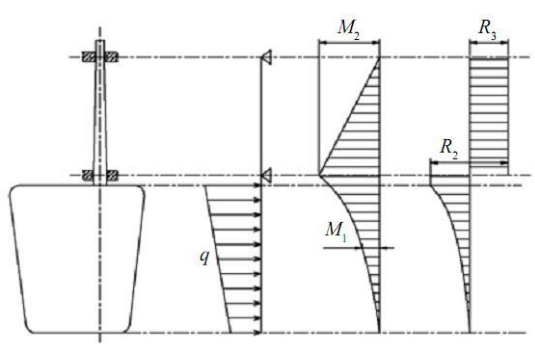

Figure 4.2.3

Load, bending moments and shear forces of the balanced suspended rudder

2.2.3.2. Balanced semi-spade rudder. The maximum value of the bending moment on the rudder blade M_1, (Nm) is to be calculated by formula:

$$M_1 = \frac{FA_b \cdot h_2}{A},$$

where F = the design hydrodynamic load, H, according to 2.2.2.1;

A_b = is the square (м^2) of the part of rudder blade below the section in question;

h_2 = is the vertical distance (м) from the centre of gravity square A_b to the section in question;

A = is the square (м^2) of the rudder blade according to 2.2.2.1.

The value of the bending moment in rudder stock M_2 (Nm), in the area of lower bearing:

$$M_2 = \frac{Fh}{17}, \qquad (2.2.3.3\text{-}2)$$

Where F = the design hydrodynamic load, H, according to 2.2.2.1;

h = is the mean height of the submerged part of the rudder (м).

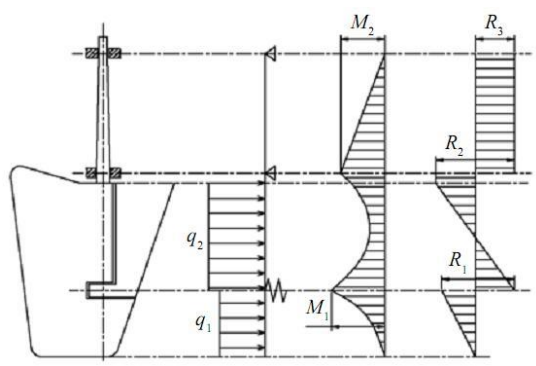

Figure 4.2.4

Load, bending moments and shear forces of the balanced semi-spade rudder

2.2.3.3. Simple unbalanced multipintle rudder

The height of the rudder stock up to the upper rudder bearing is exposed to twisting only in the simple rudders supported by pintles. Above the upper bearing the rudder stock is exposed to the bending moment (in excess of the spindle torque) caused by the force applied to the tiller or quadrant to turn rudder.

This bending moment is calculated by formula:

$$M_b = F\frac{rh_k}{L_r}, \qquad (2.2.3.4)$$

where F = the design hydrodynamic load, H, according to 2.2.2.1;

$r = x_c + f$ – see 2.2.4;

h_k = is the distance from the upper support bearing to the axis of tiller or quadrant, m;

L_r = is the radius of the quadrant or length of tiller arm, m.

2.2.4. Torque

Torque caused by the hydrodynamic load on the rudder blade M_c, (Nm) is calculated by formula $M_C = F * r$, (2.2.4)

where F = the design hydrodynamic load, H, according to 2.2.2.1;

r =is the radius of the action force, m;

$= x_c - f$, if a rotation axis is on the rudder blade;

$r = x_c + f$, if a rotation axis is before the rudder blade;

$r = x_c$ – for rudders with the rudder heel and horn (skeg) of large

square ($A_1/A_{st} < 2$);

x_c = is the horizontal distance between the point where the resultant hydrodynamic force is applied and the leading edge of the blade (or stabilizer) in accordance with the value shown on fi g. 4.2.5 to 4.2.9.

f = is the horizontal distance between the rotation axis and the leading edge of the blade (or horn), measured at the height of point where the resultant hydrodynamic force is applied according to fi g 4.2.5 to 4.2.9

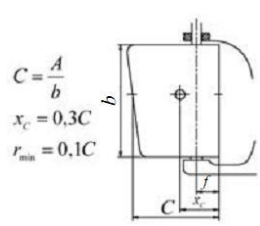

Figure 4.2.5: Rudder with heel without skeg

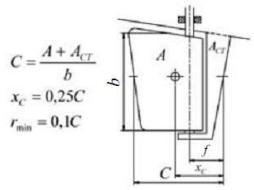

Figure 4.2.6 Rudder with heel and narrow skeg

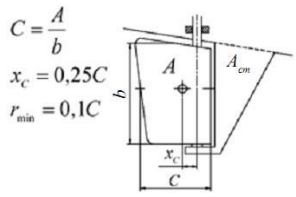

Figure 4.2.7 Rudder with heel and large skeg

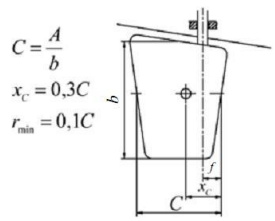

Figure 4.2.8 Balanced suspended rudder

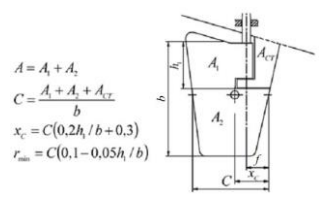

Figure 4.2.9 Balanced semi-spade rudder

2.3. Rudder blade design

2.3.1. Metal, laminate, solid wood or plywood is used in order to make Rudder blade.

As per the specifications made in Chapter 3 Hull, the blade plating thickness is to be at least equal to the minimum thickness of hull plating. It is required to check that the distance between the stiffeners of such rudder shall not exceed frame spacing of craft which is calculated on the basis of the load to the bottom in the area of the aft end and approved thickness of rudder blade plating.

2.3.2. In an arbitrary section of the rudder blade the combined stresses caused by bending and twisting σ_{com}, MPa, calculated by formula 2.3.2, shall not exceed 0,3 times the upper yield stress of the rudder blade material:

$\sigma_{com} = \sqrt{\sigma^2 + 3\tau^2}$, **(**2.3.2)

where σ is the normal bending stresses, MPa;

τ tangential stress caused by twisting, MPa.

The condition for the reduced stress is to be examined for each of them if the rudder blade is made of several different materials.

2.3.3. Welding of the metal plating of the rudder blade is to done to stiffeners by the fillet weld, it is allowed to apply plug welds.

2.3.4. Rudder blade is to be made of the solid laminate manufactured in two enantiomorphism forms and glued provided:

- The blade is glued following the technology which is approved by the Register;
- Manufactured blade is checked for bending by the load equal to $1.5M_1$, where M_1 – is the bending moment according to 2.2.3.
- If these conditions are not complied with then it is necessary to fix the halves of blade by laminate strip on the lower, leading and upper edges.

2.3.5. Proper packing shall be done to the inner cavity of the volumetric rudder blade.

It is suggested to fill the blade cavity with the material which doesn't imbibe water. The volumetric blade made of the metal or laminate which is not filled in shall be subjected to density tests by 2.5 m of water head. This requirements doesn't apply to rudder blades made of stainless steels.

2.4. Rudder stock

2.4.1. In order to prevent penetration of outer water inside craft hull, rudder stock is to pass through hull by means of the strong pipe and appropriate sealing glands are to be used. It is allowed to use pipes made of synthetic materials on condition that the following situations are complied with:

Rudder stock bearings are immovably fixed on hull;

The pipe reaches minimum 0.75 height of freeboard in the aft end; guaranteed water tightness of all equipment under any operating conditions.

2.4.2. The rudder stock and other main parts of the steering gear are to made of steels with the yield strength at least 235 MPa except special cases. It is essential that the rudder stock is to be rigidly connected to the rudder blade. There should be no points with a weak strength in the connection of the blade and rudder stock.

2.4.3. Diameters of the solid metal rudder stock d_{ti} (see fig. 4.2.10), mm, shall not be less than those calculated by the following formula:

$$d_{t1} = 33\sqrt[3]{\frac{M_S}{R_m+R_e}}, \qquad (2.4.3\text{-}1)$$

$$d_{t2} = 33\sqrt[3]{\frac{\sqrt{0.75M_2^2+M_S^2}}{R_m+R_e}}, \qquad (2.4.3\text{-}2)$$

for supported and semi-spade rudders:

$$d_{t3} = (d_{t1} + d_{t2})/2, \qquad (2.4.3\text{-}3)$$

for suspended rudders:

$$d_{t3} = 1.15(d_{t1} + d_{t2})/2, \qquad (2.4.3\text{-}4)$$

for supported and semi-spade rudders:

$$d_{t4} = 0.6d_{t2}, \qquad (2.4.3\text{-}5)$$

for rudder stocks passing through the whole height of rudder blade:

$$d_{t5} = d_{t3}, \qquad (2.4.3\text{-}6)$$

where: M_s = spindle torque according to 2.2.4, Nm;

M_2 = bending moment according to 2.3.2, Nm;

R_m = ultimate tensile strength of the used material, MPa;

R_e =yield strength of the used material, MPa.

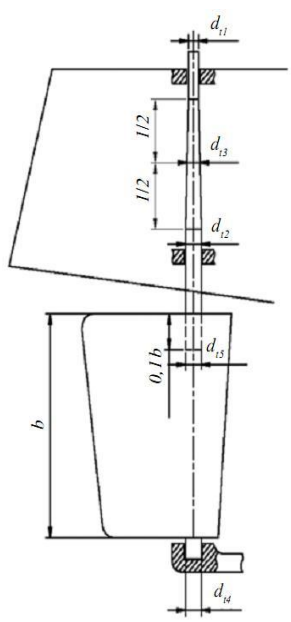

Figure 4.2.10: Rudder stock

2.4.4. It is allowed to make rudder stocks of pipes.

Diameter of such pipe and thickness of its walls should be so that their strength at twisting or simultaneous exposure to twisting and bending of the hollow rudder stock is the same as for the solid rudder stock.

The diameter of the hollow rudder stock (pipe) is to be taken so that to observe the following dependence, if material of the same strength is used:

$$d_c \leq \sqrt[3]{\frac{d_{out}^4 - d_{in}^4}{d_{out}}}, \qquad (2.4.4)$$

where d_c = diameter of the solid rudder stock, mm;

d_{out} = outer rudder stock diameter made of pipe, mm;

d_{in} = inner rudder stock diameter made of pipe, mm.

It is not suggested to use pipes with wall thickness less than $0{,}1d_{out}$.

2.4.5. In order to prevent rudder stock loosing (displacement) from bearings measures shall be taken.

2.5. Transom Rudders

2.5.1. In compliance with the requirements 2.3.1-□2.3.5, design of the permanent (stationary) transom rudder shall be done.

2.5.2. It is necessary to take measures of the rudder blade if it is detachable in order to prevent its spontaneous lifting during motion. Meanwhile, the design of the both blade and the yoke shall act in accordance with the requirements 2.3.1□-2.3.5.

2.5.3. Diameters of steel pintles d_{s1}, d_{s2} and d_{s3}, mm, used to hang up the transom rudder are shown in Fig. 4.2.11 and they shall not be less than:

$$d_{s1} = 0.2\sqrt{F(t/a)}\ ; \qquad (2.5.3\text{-}1)$$

$$d_{s2} = 0.2\sqrt{F(1 - t/a)}\ ; \qquad (2.5.3\text{-}2)$$

$$d_{s3} = 0.2\sqrt{F(1 + t/a)}\ , \qquad (2.5.3\text{-}3)$$

where d_{s1} = diameter of upper pintle;

d_{s2}=diameter of lower pintle, if F force is applied between pintles;

d_{s3} = diameter of lower pintle if F force is applied below this pintle;

F =the design hydrodynamic load according to 2.2.1, H;

t = the vertical distance between the lower pintle and the point where the F force is applied, mm;

a =the vertical distance between the pintles, mm. However, pintle diameters shall not be less than d_s:

d_s = 14 mm □for structural steel;

d_s = 12 mm □ for stainless steel.

2.5.4. The rudder hanging on the pintles is to be fitted with arrangements preventing its spontaneous lifting and falling out.

2.5.5. Design of ironworks for hanging rudder on the aft end is to correspond with the loads acting in the places of fixing the ironworks.

Thickness of flat ironworks which are used for holding rudder pintles shall be at least 0,2 diameter of the said pintles.

2.6. Couplings of Rudder Stock With Rudder Blade

2.6.1. As per the specifications made in 2.2.2 and 2.2.3, some structural elements of the rudder stock connection with the rudder blade are to be made accordingly with loads.

2.6.2. If flange connections are used the diameter of bolts d_s, mm, connecting flanges should be at least those calculated by formula:

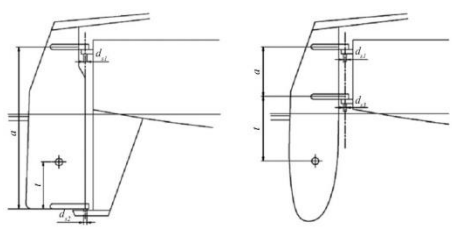

Figure 4.2.11: Transom rudders

$$d_s = 0.62\sqrt[3]{\frac{d_t^3}{n.r_s}}.\frac{R_{et}}{R_{es}}, \qquad (2.6.2)$$

where d_t=diameter of rudder stock calculated according to 2.4.3, mm;

n is the number of bolts which shall not be less than:

n = 4 □ for craft which length is less than 12 m;

n = 6 □ for craft which length is 12□24 m;

r is the mean distance from the bolt axis to the middle of pintles, mm;

R_{et} = yield strength of the rudder stock material, M Pa;

R_{es} = yield strength of the bolt material, M Pa.

2.6.3. Except cases when keys are fitted all bolts shall be stud bolts, then only two stud bolts are enough. Nuts of normal size to be used. A firm fixation of bolts and nuts are to be done. In front of the rotation axis of the rudder stock at least two bolts are to be placed.

2.6.4. The distance between the bolt axis and flange edge is to be at least the diameter of bolt.

2.6.5. Yield strength of steel the bolt is made of shall not be less than 235 M Pa.

2.6.6. Flange connection shall be made of the same casting as the rudder stock. It is allowed to weld flange to the rudder stock, which end is set to diameter by 10 per cent exceeding the design one (at least d_t + 10 mm), the height of setting shall not be less than the flange thickness. On craft which length is less than 12m if stainless steel is used and the rudder stock diameter is by 10 per cent more than the design one it is allowed to weld the flange without setting of the rudder stock end. Method of connection is to be agreed with the Register.

2.6.7. Flange thickness shall not be less than the design diameter of the bolt specified for n = 6.

2.6.8. Flange connections shall be fitted with the key only in cases where bolt diameter is lesser than 10 per cent.

2.6.9. The conical part of the rudder stock is to comply with the dependence, if cone connections are used:

$$1/12 \leq (d_1 - d_2)/l \leq 1/8; \qquad (2.6.9\text{-}1)$$

$$l \leq 1.5\, d_1, \qquad (2.6.9\text{-}2)$$

where d_1 is the rudder stock diameter in the largest cone section, mm;

d_2 is the rudder stock diameter in the least cone section, mm;

l is the length of cone, mm.

2.6.10. With relevant key, the conical connection is to be fitted.

2.6.11. The size of nut shall not be less than the following ones:

Inner thread diameter $d_3 \geq 0.65 d_1$,

Height of nut $h_n \geq 0.60 d_3$;

Outer thread diameter $d_n \geq 1.20 d_2$ or $d_n \geq 1.50 d_3$ – whatever is greater.

In order to prevent unscrewing the nut is to be firmly fixed.

2.6.12. Types of rudder stock couplings are the matter of the special consideration by the Register.

2.7. Rudder bearings

2.7.1. In respect of bearings of rudder stock and pintles accepting transverse load the requirement 2.1.8 shall be complied with.

Rudder bearing square A_n, mm^2, (is a height multiplied by diameter) shall not be less than:

$$A_n = R/P_a \ , \qquad (2.7.1)$$

where R – is the design value of the reaction force (H) caused by load calculated according to 2.2.1;

P_a – is the permissible pressure, M Pa, depending on the material of bearing:

P_a = 2,5 □ is the soft synthetic material (teflon);

P_a = 5 □ is the solid synthetic material (polyamides);

P_a = 7 □ for steel and bronze.

2.7.2. The limits for the height of bearings shall :

— It shall not be less than the rudder stock diameter in the place of installation of bearing

— It shall be not more than 1.2 diameter of rudder stock for bearing made of metal or two diameters for the bearing made of synthetic material.

2.7.3. In case if a bearing bushing is made of steel then stainless steel shall be used to manufacturing it. It is necessary to provide measures against grinding in case if a stainless steel is used for the rudder stock bearing also made of stainless steel.

2.7.4. In order to avoid accidental displacement, bearing linings (bushings) of bearings shall be firmly fixed in the bearing box.

In order to accept the weight of rudder and stock one of the bearings shall be a thrust bearing able to carry axial load equal at least the weight of rudder and rudder stock.

By the value more than that allowed by the steering gear design, measures shall be taken against the upward axial displacement of the rudder stock. Checking of the rigidity of hull structures carrying bearings of rudder stock and pintles (support) is to be done for action of forces that are listed in 2.2.3 in respect of the specific case. Single-sided clearance of bearing shall not be exceeded by elastic displacement of support under this load.

2.8. Rudder Skeg and Heel

2.8.1. Design of the rudder support in the form of skeg or rudder heel shall be rigid and strong.

Due to design transverse reaction in the bearing of rudder heel, Stresses that are originating in any section shall not exceed 0.25R_m (ultimate tensile strength).

If the support doesn't comply with this condition then the design of rudder and its rudder stock shall be in compliance with the requirements for rudders without lower support.

2.9. Rudder Tiller and Quadrant

2.9.1. In relation to the design spindle torque and used material, dimensions of tiller or rudder quadrant arm (arms) shall be determined.

Modulus of resistance W_1, mm^3, tiller or rudder quadrant arm (arms) in the place of connection with the boss shall not be less than:

$$W_1 = 1000M_s/kR_m. \qquad (2.9.1\text{-}1)$$

Modulus of resistance, mm^3, in the end of tiller shall not be less than:

$$W_2 = 180M_s/kR_m, \qquad (2.9.1\text{-}2)$$

Where M_s = is the design spindle torque (Nm), according to 2.2.4;

R_m is the rupture strength of the applied material, MPa;

k = is the coefficient depending on the material:

k = 0.40 □ for metals;

k = 0.15 □ for laminated wood;

k = 0.09 □ for solid wood.

2.9.2. If the lifting tiller is used, it's fastening to rudder stock (or transom rudder) is to be able to withstand the design load at tiller lifted at 20° angle.

2.9.3. Calculation of the dimensions of the emergency tiller are to be done for the moment equal to 0.7 design one.

2.9.4. The emergency tiller length is to be so that to ensure safe steering by rudder by not more than two men personally or by means of tackles.

2.9.5. For fixing the emergency tiller if there is tetrahedral lobe on the rudder stock, then the side of the square shall be at least 0.7d_{t1}, and its height at least 0.8 d_{t1}, where according to 2.4.3, d_{t1} – diameter of the rudder stock head.

2.9.6. The outer diameter of the quadrant or tiller boss shall not be less than 1.8 diameter of rudder stock in the point of its forcing on, and its height □shall be not less than that diameter. By at least four bolts, two on each side of the rudder stock, bosses consisting of several parts are to be connected.

Total square of the section of these bolts, mm^2 shall not be less than:

$$A = 12M_s/f, \qquad (2.9.6)$$

Where M_s = is the design torque (Nm);

f is the distance from the bolt axis to the axis of the rudder stock, mm.

2.9.7. Design of the steering gear quadrant with the mechanical drive are to be in compliance with the requirements 2.9.1

2.10. Steering Gear

2.10.1. Unless expressly provided otherwise, each craft shall have two steering gears – main and auxiliary.

Mechanical steering gear shall be capable of:

Putting the rudder from one board to the other at least $\pm 35^0$ In case of the outboard motor, this angle shall be at least $\pm 30^0$;

Limit maximum deviations of the rudder by means of stoppers;

Safe perception of loads caused by the design spindle torque due to action of the pressure force by all elements of the gear;

Tangential force on the steering-wheel ring not more than 200 H;

By means of the relevant indicator on the wheelman's position, information on the rudder blade position relative to the centre line plane;

Use of the emergency tiller or other emergency steering gear complying with requirements 2.9.3

2.10.2. It shall be the capability of the main steering gear to put the fully submerged rudder at a maximum operational ahead speed of the craft and under the same conditions from 35^0 on one side to 30^0 on the other side within 30 s.

2.10.3. The auxiliary steering gear shall be independent from the main steering gear and shall be capable of putting the rudder from 20^0 on one side to 20^0 on the other side in not more than 60 s at half of the maximum operational ahead speed at least:

For craft of design categories **R**, **R100**, **R200**, **B**, **R0** and $\mathbf{C_1}$ – 5 knots;

For craft of design categories $\mathbf{C_2}$, $\mathbf{C_3}$ and **D** –half full speed

It is permitted that the main and auxiliary gears shall have some common parts (for instance, tiller, quadrant, gear box, cylinder block etc.) provided that the respective scantlings of these parts are increased in accordance with 6.2.8.2, Part IX «Machinery» of the Rules for the Classification and Construction of Sea-Going Ships.

2.10.4. The main steering gear may be hand-operated provided that the requirements of 2.10.2 at steering force not more than 120 H and the number of steering wheels of not more than 25 per one deflection of the rudder are met by it. The main steering gear shall be power-operated, if the said condition is not complied with.

Tiller may be used as a main steering gear if the requirement 2.10.2 is complied with at a tiller steering force not more than 160 H per each working man; meanwhile, there is no need to install the auxiliary steering gear.

2.10.5. There is no need to install the auxiliary steering gear where the main steering gear consists of two equal power units.

2.10.6. The auxiliary steering gear can be operated by hand, if the requirement 2.10.3 is complied with at a tiller steering force not more than 160 H per each working man and the number of turns of the wheel is not more than 25 per one full helm deflection.

If the requirement 2.9.3 is complied with at the force in the runner of steering tackle or tiller not more than 160 N per each working man then steering tackles or tiller can be used as the auxiliary steering gear.

In all other cases the auxiliary steering gear is to be power driven.

2.10.7. For the rudder rotation, steering gear shall have the stopper which permit its turn either board to the β^0 angle:

$$(\alpha° + 1°) \leq \beta° \leq (\alpha + 1.5°), \qquad (2.10.7\text{-}1)$$

Where α^0 is the maximum angle of putting the rudder to which the end switches of the steering gear are adjusted is usually taken as $\alpha^0 \leq 35^0$

Designing of all details of the stopper including those that are simultaneously used as the details of the steering gear shall be done in order to withstand forces that corresponds to the ultimate reverse torque on the rudder stock M_{ult}, кN·cm, that is calculated by formulae

$$M_{ult} = 2.7d^3, \qquad (2.10.7\text{-}2)$$

Meanwhile in these details, stress shall not exceed 0.95 yield strength of their material.

2.10.8. Hand-operated shaft steering gear in respect of design, scope of bench tests and documentation shall be in compliance with the requirements of standard ISO 13929:2001.

2.10.9. In respect of design, scope of bench tests and documentation Hand-operated rope, steering gear shall be in compliance with the requirements of standard ISO 8847:1987.

2.10.10. On craft with outboard motor the remote hand steering gear in general case in respect of design, scope of bench tests and documentation shall be in compliance with the requirements

of the standard EN 28848:1993 or EN 29775:1993 at power of the outboard motor from 15 to 40 KW.

2.10.11. Hand-operated rope steering gear the tensile strength of rope steering rods (N) is to be not less than that calculated by formula:

$$R = 9.5M_s/r_s \ , \qquad (2.10.11)$$

Where M_s = design spindle torque (N m), according to 2.2.4;

r_s = quadrant radius, m.

Ropes of steering rods are to be made of stainless steel.

Corresponding to the strength of rods, lanyards and connection elements are to be chosen. Diameter of leading blocks shall not be less than sixteen diameters of rope.

2.10.12. The motor shall be fitted with the appropriate lever on tiller for connection with the steering gear on craft with the outboard motor. Both engines are to be connected between each other if there are two engines.

In the meantime, the requirements of 2.10.1 are to be complied with in respect of the angles of deflection the helm and presence of stoppers (mechanical stops).

2.10.13. As an emergency means of movement and steering on craft with the outboard motor, one pair of boat oars with rowlocks at $L_{wl} \leq 6$ m is to be provided. At $L_{wl} > 6$ m a craft shall be fitted with two engines.

2.10.14. In all other respects the steering gears are to be in compliance with the applicable requirements of Chapter 5 “Machinery Installations. Machinery. Systems and Piping” and Chapter 6 “Electrical Equipment”.

2.11. Rudder trunk

2.11.1. The rudder trunk design shall assure strength which would ensure resistance to forces emerging in the steering gear. Strengthening of the rudder trunk shall be done in the longitudinal and transverse directions and shall be connected to the longitudinal and transverse framing.

With the help of the following formula, the minimal wall thickness of the trunk made of metal materials is to be calculated:

$$S = 0.9\sqrt{L_{wl}}\sqrt{k}, \qquad (2.11.1\text{-}1)$$

Where L_{wl} – is the craft length by design waterline, m;

k – is the coefficient considering type of material:

for usual carbon steel k = 1.0;

for steels with other characteristics □

$k = 635/R_{eh} + R_m,$ (2.11.1-2)

Where R_{eH} – yield strength of steel, N/mm^2;

R_m – steel ultimate tensile strength, N/mm^2;

For sea water resistant aluminium alloys □

$k = 635/R_{p0.2} + R_m,$ (2.11.1-3)

Where $R_{p\,0.2}$ 0.2 % yield strength of aluminium alloy, N/mm^2;

R_m – aluminium alloy ultimate tensile strength, N/mm^2.

2.11.2. Strength of the rudder trunk on craft made of glass fiber plastic shall be equal to the strength of the bottom plating.

The rudder trunk shall pass through the craft hull till the crossing with the deck or be fitted with the seal higher than the actual waterline.

At height of 200 mm from the actual waterline hoses or sleeves like hoses made of material that are agreed with the Register, may be used for extension of the rudder pipe.

2.11.3. The seal is to be fitted in the upper end of the rudder trunk in order to prevent penetration of the outer water inside craft hull through the rudder trunk on craft of design categories **R, R100**, **R200**, **B** and **R0**, which upper end of the rudder trunk is not connected with the cockpit bottom or main deck and located in the inner under deck space. Special consideration by the Register shall be provided for specific types of designs of these seals, depending on the purpose of craft, dimensions etc However, manufacturing of these seals are to be done in such manner that they are accessible for inspection and maintenance by the crew at any time without regard of the designs.

SECTION 3 ANCHOR ARRANGEMENT

Contents

3.1. General

3.1.1. Except of design category **D,** each craft shall be provided with the anchor arrangement confirming capability of the long mooring of a craft far from shore unprotected to current and at maximum wind and waves. It is required to allow this craft for sailing as well as fast and safe release and hoisting of the anchors at all possible situations. Craft of design category **D** may have no anchor arrangements.

3.1.2. The following elements are to be a part of the anchor arrangement:

Anchor (one or several);

Anchor cables and/or ropes;

Anchor release and hoisting mechanisms (if necessary);

Arrangements for stowage of anchors onboard (if necessary);

Arrangements for stowage and release of inboard end of chain cables and/or ropes (if necessary).

3.2. Characteristics of Anchor Outfit

3.2.1. In compliance with the tables 4.3.1 and 4.3.2, supply of anchors, cables and are to be confirmed on the basis of outfit characteristics.

Outfit characteristics, N_c , m^3, is calculated by formula:

$N_c = 0.6LBD_1 + A$, (3.2.1)

where L = is the design craft length equal to half sum of craft length L_H and length at design waterline;

B = is the maximum craft breadth (m) measured by the outer edges of framing from one side to another without regard of the outwhales;

Table 4.3.1: Anchors, chain cables/cables and towing ropes of sail boats, motor sailers

Outfit characteristic *Nc* (м³)	Water displacement Δ (т)	Weight of anchors, kg		Chain cable or cable			Towing rope	
		1st anchor[1]	2nd anchor	Length of chain, m [2]	Diameter, mm		Length, m	Diameter[4], mm
					Chain[3]	Cable[4]		
≤ 10	≤ 0.15	2.5	-	-	-	8	5 L_H	12
≤ 10	0.20	3.0	-	-	-	8		12
≤ 10	0.30	3.5	-	-	-	8		12
≤ 10	0.40	4.5	-	-	-	8		12
≤ 10	0.50	5.0	-	-	-	10		12
≤ 10	0.60	5.5	-	-	-	10		14
≤10	0.75	6.5	-	-	-	10		14
≤ 10	1.00	7.5	-	-	-	10		14
≤ 10	1.50	8.7	-	-	-	10		14
≤ 10	2.00	10.5	9.0	22.5	6.0	12		16
15	3.00	12.0	10.0	24.0	6.0	12		18
20	4.00	13.0	10.5	25.0	6.0	12		18
25	5.00	13.5	11.0	26.0	7.0	14		18
30	6.00	15.0	13.0	27.0	7.0	14		18
40	8.00	17.0	15.0	29.0	8.0	16		20
55	12.00	21.0	18.0	32.5	8.0	18		22
						8		
70	17.00	25.0	21.0	36,0	9.0	24	4.75 L_H	22
90	23.00	29.0	25.0	40,0	10.0	26		22
110	29.00	34.5	29.0	43,0	10.0	28		24
130	36.00	40.0	34.0	47,0	11.0	-	4.75 L_H	24
155	44.00	46.5	40.0	52,5	13.0	-		24

180	52.00	53.0	45.0	57,0	13.0	-		24
210	57.00	62.0	53.0	62,0	13.0	-		26
245	72.00	73.5	62.0	68.0	14.0	-		26
280	84.00 100.00	84.0	71.0	74.0	16.0	-	4.75 L_H	26
300		95.0	81.0	78.0	16.0	-		26

1

For craft of design categories **C_2**, **C_3** and **D** it is allowed to use anchors without a stock with a weight at least 1,33 of the figure specified in the table.

[2] It is applied individually to each anchor.

[3] Chain cable diameter.

[4] Nominal diameter of three-stranded rope twisted nylon cable according to table. 4.4.2

Table 4.3.2: Anchors, chain cables/cables and towing ropes of motor craft, oar-propelled and non-self-propelled craft

Outfit characteristic *Nc* (м³)	Water displacement Δ (т)	Weight of anchors, kg		Chain cable or cable			Towing rope	
		1st anchor[1]	2nd anchor	Length of chain, m [2]	Diameter, mm		Length, m	Diameter[4], mm
					Chain[3]	Cable[4]		
1	2	3	4	5	6	7	8	9
≤ 10	≤ 0.15	2.5	-	-	-	8	55 L_H	12
-	0.20	3.0	-	-	-	8		12
-	0.30	3.5	-	-	-	8		12
-	0.40	4.5	-	-	-	8		12
-	0.50	5.0	-	-	-	10		12
-	0.60	5.5	-	-	-	10		14
-	0.75	6.5	-	-	-	10		14
-	1.00	7.5	-	-	-	10		14
-	1.50	8.7	-	-	-	10		14
≤ 10	2.00	9.0	-	20.0	6.0	12		16
15	3.00	10.0	-	22.0	6.0	12		18
20	4.00	11.0	-	23.0	6.0	12		18
25	5.00	12.0	-	24.0	6.0	12		18
30	6.00	13.0	-	25.0	7.0	14		18
40	8.00	14.0	12.0	26.0	7.0	14		20
55	12.00	18.0	15.0	29.0	8.0	16		22
70	17.00	21.0	18.0	32.5	8.0	18	4.75 L_H	22
90	23.00	25.0	21.0	36.0	9.0	24		22
110	29.00	29.0	25.0	38.5	10.0	26		24
130	36.00	34.5	29.0	42.0	10.0	28	44.5 L_H	24

155	44.00	40.0	34.0	47.0	11.0	-		24
180	52.00	46.0	39.0	51.0	13.0	-		24
210	57.00	52.5	44.0	55.5	13.0	-		26
245	72.00	61.0	52.0	61.0	13.0	-	44.25 L_H	26
280	84.00	70.5	60.0	66.5	14.0	-		26
300	100.0	79.5	67.5	70.0	16.0	-		26

1 For craft of design categories **C_2**, **C_3** and **D** it is allowed to use anchors without a stock with a weight at least 1.33 of the figure specified in the table.

2 It is applied individually to each anchor.

3 Chain cable diameter.

4 Nominal diameter of three-stranded rope twisted nylon cable according to table. 4.4.2.

D_1 **=** is the conditional depth, (m) equal to depth of craft *D* plus 1/6 keel height measured at transverse direction amidships at design waterline;

A = 0.5 of the volume of superstructures (m^3) meanwhile superstructures and deckhouses which width is less than *B*/4 may be disregarded.

3.2.2. As per the specifications made in column 2, Table. 4.3.1 and 4.3.2, in case of a light craft where displacement is less than that, anchor appliances may be chosen on the basis of the mean value between the water displacement and characteristics of the anchor appliances. In this case the weight of the anchors is to be defined by means of the interpolation and diameter of chain links and length of cables and ropes are to be rounded upward to the nearest greatest value. The anchor appliances for craft of design categories **C_2**, **C_3** and **D** are chosen on the basis of *Nc* corrected by the adjustment coefficient equal to 0,75.

3.2.3. The anchor appliances for craft with water displacement less than 1,5t are chosen on the basis of the water displacement.

3.2.4. According to table 4.3.1 the anchor appliances for berth connected craft are chosen on the basis of characteristics 3.2.1.

3.2.5. It is a mandatory requirement for anchors fitted with anchor cables to fit the cable to anchor by means of piece of cable of relevant diameter which length is not less than one anchor length of chain specified in 3.4.1.5.

3.3. Anchors

3.3.1. As per the enlisted in tables 4.3.1 and 4.3.2, the weights of anchors refer to anchors of the high holding power.

It is necessary to do tests following the approved Test program in order to acknowledge an anchor as a high holding power anchor. During Construction of Ships and Manufacture of Materials and Products for Ships, the requirements for manufacture of anchors are given in Section 3, Chapter 4 "Equipment, arrangements, outfit" and Part 1. The Register stamp is put and the Certificate is issued on the basis of satisfactory results of anchor survey when the marking of an anchor is checked.

Anchors of the following types are permitted to be used on craft:

Hall's; Gruson's;

Admiralty anchor.

3.3.2. The mass of each anchor separately may differ by 7 per cent from the figure given in table 4.3.1 and 4.3.2, if two anchors are fixed, in the interim the total mass of these two anchors shall not be less than the mass needed.

3.3.3. It is required that the materials for anchors shall fulfill the requirements of Part 2 "Materials and Welding". In the presence of the Register representative, anchors which mass is more than 75 kg and their chain cables are to be checked. At the manufacturer facilities, without presence of the Register representative, the anchors which mass is less than 75 kg and anchors planned for craft of design categories $\mathbf{C_1}$, $\mathbf{C_2}$, $\mathbf{C_3}$ and **D** may pass relevant tests.

3.3.4. It is essential that the sail mono hull and multihull craft of design categories **R**, **R100**, R**200**, **B** and **R0** shall be fixed with the floating anchor with diameter of bell mouth between 10 per cent and 15 per cent of craft length L_H. The floating anchor shall be fitted with the anchor cable made of plain-laid nylon rope which length is equal to $10L_H$ and diameter equivalent to the tow line for this craft. A weight of 20 kg shall be fitted onboard for embedding the floating anchor.

3.4. Ropes and chain cables

3.4.1. Anchor cables /ropes and chain cables.

3.4.1.1. The tow line may be used as an anchor cable on crafts with water displacement l.5 t and less.

3.4.1.2. Short links or links with studs may be there in Chain cables. In accordance with the requirements of Part 2 Materials and welding chain cables shall be made of mild steel or special steel.

3.4.1.3. It is permitted to use chain cables with short links which diameter is defined for the chain cables with studs.

3.4.1.4. Special Anchor cables are to be 1.5 longer that the length specified for the chain cable in tables 4.3.1 and 4.3.2 and be spliced into a thimble at one end.

3.4.1.5. Anchor length of chain is to be inserted between the anchor cable and anchor which diameter is given in column 6, table 4.3.1 or 4.3.2 and length according to table 4.3.3.

Table 4.3.3

Nominal diameter of chain cable of anchor length of chain, mm	Anchor length of chain, m
6 – 8	6.0
9 – 16	12.5

Chain cables and anchor length of chain are to be fitted with enforced links on the ends. A swivel is to be fitted between an anchor and chain cable.

3.4.1.6. The inboard end of chain cable shall be connected to craft hull so that in case of danger it can be released at any time from the easily accessible and safe place for the crew. Inboard end of chain cable is to be at least by 15 per cent (but not greater than 30 per cent) stronger than the nominal breaking strength.

3.4.1.7. In order to serve for anchors with a mass from 30kg to 50 kg it is recommended to use anchor winches. On sail boats the sheet winches may be used for release and hoisting such anchors.

3.4.1.8. Anchor machinery shall be used for serving anchors with a mass greater than 50 kg on a mandatory basis. It is recommended to use capstans or windlasses, winches and similar mechanisms as anchor machinery.

3.4.1.9. Anchor machinery is to comply with the requirements of 3.7. If anchors weighing more than 50 kg are to operate together with ropes/cables, then the anchor winch is to be fitted with the rope drum enabling fast release of the inboard end of chain cable at all possible situations. Safety of its operation is to be confirmed in practice.

3.4.1.10. At all craft where it is allowed to use the tow line as an anchor cable there shall be details connecting tow cable with the anchor length of chain.

3.5. Chain Locker

3.5.1. Cable lockers shall be provided for stowage of each chain.

When one chain locker is designed for two chains it shall be provided with an internal division so that separate stowage of each chain is ensured. Transverse dimensions and height of the chain locker are to ensure direct and unimpeded lead of chain through the deck organizer even when the chain is absolutely heaved.

3.5.2. On craft with chain locker measures are to be taken to prevent flood of the adjacent compartments when the chain locker is submerged through the deck organizer.

3.6. Arrangement of Anchor Appliances Onboard

3.6.1. The actual number and mass of anchors, hull shape in the area of regular location of the anchor appliances, arrangement of details of the anchor appliances as well as arrangement of the fore ward forepeak bulkhead, transom board and after peak bulkhead is to be considered during arrangement of anchor appliances onboard.

3.6.2. It is required to allow laying of the whole length of chain cable with minimum crew's labour input by mutual arrangement of deck organizers, anchors, chain cables and locker.

3.6.3. Regular place for anchors are bow and/or stern part of craft. Type and design of these regular places of storage of anchors onboard depend on the specific developed design of craft approved by the Register for the implementation.

3.6.4. Without regard of type, the main requirement for place of stowage is safe stowage of anchors at any heel and trim corresponding to her design category.

Anchor deck organizers are to fulfill the following requirements:

Internal diameter of hawse hole if it is a round one or the least diameter if it is an oval one or close to an oval shall be at least 10 diameters of chain cable or four diameters of the anchor cable and deck organizer wall thickness shall be not less than 0.5 chain cable diameter;

The chain cable shall be bended in the place of passage through the stopper and deck organizer is to be minimal, If stoppers are used onboard to fix the chain cable.

3.6.5. In order to assure anchors safe storage in the place of stowage at any significant heels and trims of craft securing of anchors onboard is to be done.

3.6.6. Storage of anchors and chain (in stowed for sea position) is to be confirmed at maximum acceptable angles of heel for craft of design categories **R**, **R100**, R**200**, **B**. It is essential to ensure by securing the stowage of the chain cable in the locker that after return of a craft to the normal operating position the anchor cable is not going to be tangled. The chain cable shall be secured in such manner that in any necessary condition it is ready for release for dropping an anchor.

3.6.7. In order to carry out the stopping and releasing of anchors safely and rather easily, stoppers, holding an anchor and chain cable are to be placed in proper manner.

3.7. Anchor machinery

3.7.1. Scope of application

In accordance with the requirements 3.4.10 and 3.4.11 the present chapter deals with the requirements to the anchor machinery (windlasses, capstans and winches) which are installed on a craft.

3.7.2. Type of drive.

3.7.2.1. Hand-operated drive is permissible as the main (primary) one.

Hand drive levers are to be fixed with protection against the counter rotation.

3.7.2.2. It is suggested that for power driven windlasses to provide emergency drive independent from the main drive. In case of a hand operated emergency drive it shall be designed in such manner so that the switching of a power driven drive will not cause any danger.

3.7.3. Overload protection.

There should be protection against exceeding the 0.5 of the trial load which is fitted between the drive and machinery if a drive of anchor machinery may create a moment exceeding of the said load of chain cable then.

3.7.4. Disengaging clutches.

The Anchor machinery is to have a disengaging clutch between a sprocket and drive shaft.

3.7.5. Breaks.

Installation on breaks must be done in Anchor machinery in order to guarantee safe stopping and holding of anchors and chain when a sprocket is disengaged from shaft. In addition, there shall be arrangements stopping full paying out of chain if the drive fails to function with the engaged sprocket in case of non-self-braking machinery.

3.7.6. Chain-wheels.

It is essential that the chain wheels of anchor machinery shall have at least five cams. For sprockets with the horizontal axis the angle of contact with chain is to be at least 115°, for sprockets with the vertical axis this angle shall be at least 150°.

3.7.7. Power and strength dimensions.

3.7.7.1. Anchor machinery shall be capable of lifting triple mass of an anchor with a mean speed of 3 m/min. There shall be a limit that the force applied to a handle shall not

exceed 15 kg at a radius approximately 35 cm and rotational speed 30 rev/min in case of hand-operated wind lasses.

3.7.7.2. In the course of detachment of an anchor from soil, the drive is to be able to endure a short term overload.

3.7.7.3. Based upon requirements of Section 3, Chapter 5 “Machinery Installations. Machinery. Systems and Piping”, in accordance with the usual design practice of craft machinery strength dimensions of drive elements are to be assigned.

SECTION 4 MOORING AND TOWING ARRANGEMENTS

Contents

4.1. General

4.1.1. It is essential that the each craft will be equipped with the mooring arrangement providing reliable and safe mooring operations.

Design of the mooring arrangement is to be done simultaneously with design of anchor and towing arrangements of a craft.

4.1.2. The mooring arrangement shall comprise the following main machinery and equipment (considering water displacement and size of craft):

Machinery for craft mooring;

Mooring cables;

Details and equipment serving for fixing and guiding mooring cables (bollards, fairleads, rollers, belaying cleats, mooring deck organizers etc);

Auxiliary equipment and arrangements usually used for craft mooring (mooring cable stoppers, reels, fenders, outwales etc).

Only one mooring cable is to be fixed on the mooring bollard or cleat at any mooring scenario. It is not allowed to lead more than one mooring cable through the mooring deck organizer or mooring fairlead.

At least 16 m one throwing line is to be provided on each craft.

4.2. Mooring Appliances

4.2.1. Each craft is to be completed with mooring cables of the following quantity:

1 for craft which length is $L_H \leq 6$ m;

2 for craft which length is $L_H > 6$ m

Cable nominal diameter shall comply with the Table 4.2.1.

The length of mooring cables shall be:

1.5 L_H if a craft is completed with one cable;

At least 1.5 L_H and 1.0 L_H respectively if a craft is completed with two cables

Table 4.4.1: Cable nominal diameter

Craft water displacement, t	Nominal diameter of three-stranded twisted polyamide cable, d_2, mm

≤ 0.2	10
0.6	12
1.0	14
2.0	14
6.0	16
12.5	18
25.0	20
50.0	22
75	24
100 and more	26
Recommendations on choice of a cable – see Table 4.4.2.	

4.2.2. It is required that the mooring bollards, bitts and belaying cleats shall be made of metal (carbon construction steel, stainless steel, brass, bronze, aluminium). Cast bollards and bitts, along with side mooring deck organizers can be made of cast iron. On crafts with a length L_H up to 6 m inclusive the mooring cleats can be made of wood bound by metal fastened to foundation or on wooden craft directly to deck.

4.2.3. Essentially the outer diameter of mooring bollard or bitt shall be at least 5 diameters of the mooring synthetic cable and height suitable for four turns of cable laid upon each other. The spreaders with the diameter not less than 1.2 diameter of the mooring cable are to be fitted for safe fixing of mooring ends on bitts and bollards.

4.2.4. Selection of the bollards, bitts, belaying cleats, fairleads, mooring deck organizers and their foundations shall be done in such way that if force equal to breaking load of the mooring cable or tow line in addition to anchor cable or chain is applied to them, the stresses in them would not exceed 0.75 of their material's yield strength.

4.2.5. Recommendation is made to use capstans and winches with various mechanical drives (hand-operated drive, electrical or hydraulic drives) as mooring machinery.

4.3. Location of Mooring Arrangement Onboard

4.3.1. On craft dimensions, general arrangement of mooring machinery and appliances depends. Mutual location of mooring machinery and appliances shall ensure safe and convenient working conditions to handle mooring cables.

4.3.2. The mooring machinery and appliances are to be located in the bow and aft ends of craft in order to ensure safe mooring of a craft to berthing structures.

4.3.3. Provision shall be made there to pay out (haul) mooring cables to any side without slipping of these cables from drums, gipsy heads, mooring bollards, cleats and rollers during operation when mooring machinery with drives or bollards and capstans without drives are fitted .

4.3.4. The distance from the drum axis of mooring machinery to the arrangement changing direction of the cable (deck organizer, mooring fairlead, roller), is to be at least 7 lengths of drum in order to guarantee uniformity of laying the mooring cables on drums of capstans and winches.

4.3.5. It is required that the distance from the roller axis to the axis of warping drum (gipsy head) of mooring machinery is to be at least 50 diameters of the mooring cable.

4.3.6. A check is essential that the angle of vertical slope of the cable from the mooring fairlead to belaying cleats or bollards shall be not more than 15°.

4.3.7. It is relevant deck organizer shall be placed forward from the mooring bollard or belaying cleats if a mooring bollard or mooring belaying cleats are placed forward from the midship section . If mooring bollard or mooring belaying cleats is located behind the midship section and its relevant deck organizer is to be located further astern from mooring bollard or belaying cleats.

4.3.8. The distance from the mooring fairlead or mooring deck organizer to relevant mooring bollards or belaying cleat shall be more than 40 diameters of the mooring cable.

4.4. Towing arrangement

4.4.1. General.

4.4.1.1. For the design category of this craft, each craft shall be provided with the safe towage by another craft at wind and waves typical.

4.4.1.2. Recommendation has been made to provide towing assistance to another craft of the same or less dimensions than this craft with regular arrangements to use her own engine of the propulsion plant on motor craft and motor-sailing craft.

4.4.1.3. According to the structural features of hull and type of this craft in addition to specific features of deck equipment, the number and nomenclature of equipment and machinery of towing arrangement along with their location on craft shall be selected by designer.

4.4.2. Requirements for towing arrangement.

Craft towing arrangement shall comprise of:

Tow line of sufficient length and diameter according to the Table 4.3.1 or 4.3.2;

Equipment for securing and guiding tow lines

Integration of designing of towing arrangement and developing methods of craft towage shall be done with designing of anchor and mooring arrangements.

4.4.3. Tow line.

4.4.3.1. It is recommended for motor craft and motor- sailing to check breaking strength of tow line by the engine design thrust in a craft designed to provide also towage assistance to other craft. Breaking strength of tow line F_p (кN) shall be at least:

$$F_P = K.F\ , \qquad (4.4.3.1)$$

Where F = 0.25 N_e is the design thrust (ken);

K = is the safety margin for tow line:

5 ≤ K ≤ 7 − for synthetic lines;

K > 2 − for steel ropes;

N_e = is the effective power of the craft propulsion plant, кW.

4.4.3.2. The length of tow line L_{tl} considering 4.4.3.1 shall not less than the value defined by the following dependence:

$$L_{tl} = (6.3 \div 6.5)L_H. \qquad (4.4.3.2)$$

Meanwhile the length of the craft tow line calculated according to this dependence shall be not less than the following value depending on the craft design category:

120 m − for craft of design category **R**;

100 m − for craft of design category **A_1** and **R200**;

70 m − for craft of design category **B**;

40 m − for craft of design categories **R0**, **C_1**, **C_2**, **C_3** and **D**.

4.4.3.3. Tow line may have an eye splice on one end and on the other end relevant whipping or other measures preventing detwisting are to be applied.

4.4.3.4. Tow line may be used as a hawse for slewing anchor.

4.5. Mooring and towing cables

4.5.1. From the fibre or synthetic fibre mooring and towing cables may be produced. Generally tensile strength of cable is to correspond to the values set forth in Table 4.4.2.

Table 4.4.2 Characteristics of cables made of synthetic fibres

1. Characteristics and trademarks			
Letter identification	Polyamide PA	Polyether PES	Polypropylene PP
Trademark	Perlon Nylon	Trevira Diolen Terylene	Poly Polyprop Hostalen
Density, kg/dm^3 Breaking elongation, % Melting point, °C Light stability	1.14 35 – 50 225 – 250 good	1.38 20 – 40 260 very good	0.19 20 – 40 163 – 174 good at UV-stabilization

2. Mechanical properties of three stranded twisted cables					
Polyamide [1]		**Polyether [1]**		**Polypropylene [1]**	
Nominal diameter, mm	**Minimal tensile strength[2], kN**	**Nominal diameter, mm**	**Minimal tensile strength[2], kN**	**Nominal diameter, mm**	**Minimal tensile strength[2], kN**
6	7.35	6	5.80	6	5.90
8	13.20	8	10.50	8	10.40
10	20.40	10	16.80	10	15.30
12	29.40	12	24.00	12	21.70
14	40.20	14	33.70	14	29.90
16	52.00	16	43.40	16	37.00
18	65.70	18	54.80	18	47.20
20	81.40	20	68.20	20	56.90
22	98.00	22	82.00	22	68.20
24	118.00	24	98.50	24	79.70
26	137.00	26	115.50	26	92.20

[1] Complying with requirements 6.2, Part XIII «Materials» of the Rules for the Classification and Construction of Sea-Going Ships and manufactured according to standards approved by the Register.

[2] It is necessary to consider that the minimal tensile strength is reducing in the following cases:

Splicing (about 10 %);

Action of solar radiation;

Internal heating during operation;

External heating due to friction (deck organizers, gipsy head of capstan).

If there are kinks it is necessary to take into account the reduction of strength by 50 %.

Wetting reduces the towing capacity of the polyamide ropes by 10 – 15 %.

Steel ropes manufactured in accordance with the standards agreed with the Register may be used.

4.5.2. Diameter of the mooring or tow cable shall not be less than 10 mm.

4.5.3. For production of mooring and towing cables, high quality materials in compliance with the relevant applicable standards are to be used.

4.5.4. In relation t the type and if necessary cables made of synthetic fibre it is required that it contain coating protecting from the UV radiation.

4.5.5. It is not received that while any treatment of preventing putrefaction of cable and enabling water-resistant qualities is going on it impair other characteristics, reduce strength or significantly increase mass.

SECTION 5 SPARS AND SAILING RIGGING

Contents

5.1. General

5.1.1. Scope of application

5.1.1.1. The present section deals with the requirements of refer to rig of sailing craft, sailing-motor craft and motor-sailing craft.

5.1.1.2. Subject to the craft operation complying with good seamanship, the requirements mentioned herein hold value and imply that the area of lifted sails does not exceed the values set by the design of craft for the design wind force.

5.1.1.3. The present section deals with the requirements apply to crafts with the Bermuda rig which is most comprehensively used on small pleasure craft. It is upon the Register's special consideration that the application of the requirements of the present part to craft with the square or gaff rig or rig of another type unless otherwise is not specified.

5.1.2. Definitions and explanations

5.1.2.1. The following definitions and explanations are used in this section of the Rules:

Windon the bow – the course of the sail boat relative to the wind direction at which its longitudinal centre-plane makes an angle less than 90° to the line of wind taking from the craft bow.

Bow sprit – is the horizontal or sloped spars, fixed on the craft bow and prostrating in front of stem.

Shrouds – are the ropes of the standing rigging which attach the masts and topmasts to craft sides.

Lower shrouds (lowers) − are shrouds holding the mast column.

Hounds – are metal plates on the outer side of craft, with the set of which the lower rigging screw of shrouds and back stays is fastened

Gaff – is the inclined spars, one end of which (*heel*) is resting on the mast and it serves for setting the four-cornered trysail and topsail.

Sail boom – is the horizontal spars permanently fixed in the low part of the mast and serving for fixing the lower boltrope of trysail.

Permissible load – is the conditional load which will not cause the structural damage.

Jib – is the forward triangle sail set above bowsprit.

Mast column – is the lower part of mast from saucer to the lowest node (cross piece, spreader etc).

Safety factor − is a fraction at division of the breaking load by the permissible load.

Incomplete forward triangle (small rig) – is the type of rigging when the point of fixing the forestay is at 0.75 – 0.9 height of mast.

5.1.2.2. Main types of small pleasure craft.

Yawl I − is the type of the two mast rigging with the main mast and after mast if the after mast is located behind the of the rudder stock head

Ketch – is the type of the two mast rigging with the main mast and after mast if the after mast is located in front of the rudder stock head

Sloop – is the type of the single mast rigging with the main mast and staysail

5.1.2.3. Sailing rig

The height of the forward triangle *I* – is the distance from point of stay fixing to the mast to the point of intersection of the line of the forward edge of mast with deck or deckhouse or extension, if necessary.

Base of the forward triangle *J* – is the distance from the point of fixing the stay to the line of intersection of the line of forward edge of mast with deck or deckhouse or extension, if necessary.

Length of the lower leech of main sail *E* – is the distance along the sail boom from the front to aft end.

Main sail hoist P – is the distance along the mast from the upper edge of sail boom close to mast or lowest point of the main sail to the upper point of main sail.

Sail area – is the compound of sails intended for sailing at a conditional wind force and compliance with the requirements in respect of craft stability and loads applied to the elements of sails. In respect of wind force the permissible square of sails is usually divided into the main, reduced and storm one.

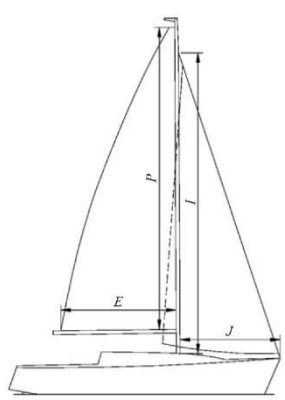

Figure 4.5.1: Main dimensions of sails

Main sail area − is the compound of sails intended for sailing by the wind at wind force 4 − 6 except sailing at the light weather.

Reduced sail area − is the compound of sails intended for sailing by the wind at wind force 6 − 7.

Storm sail area − is the compound of sails which are hoisted to sail by the wind at wind force 8 and more.

Mast span − is the part of mast between two consecutive nodes.

Mast hole – is a hole in deck specially fitted for passage of a mast.

Breaking load − is the conditional load which causes damage to the structure in the form of rupture, bending, shear, loss of form etc.

Spars – is a set of appliances serving for hoisting and holding sails etc (masts, topmasts, cross trees, gaffs, sail booms, bowsprit, booms boom kins etc.)

Cross - tree (a frame made of spreaders) – crossed bars on a mast which reinforce it at joint operation with shrouds.

Stay sail − is a triangle sail which is hoisted on the forward boltrope on a stay.

Top mast – is spars which extends the main part of mast.

Rigging – is the general name for all rigging serving for proper holding the spars and for hoisting, lowering and rotating some of the rigs as well as for setting and hauling in of some sails.

Running rigging – it is not rigidly fixed and the hauling end has an unrestricted motion.

Standing rigging – holds the spars in proper position.

Type of sailing rig – special features of spars' design and forms of sails, as well as rigging which determine the type of sails as shown on the figure below:

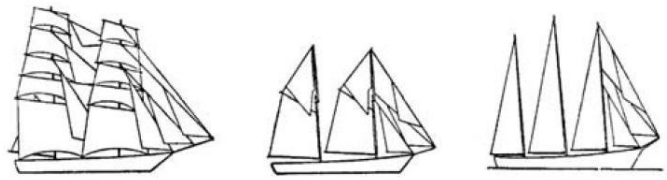

Square sails Gaff Bermuda

Top sail – is the triangle sail set above the gaff.

Try sail – is the triangle and square sail which one boltrope is set along the mast.

Mast node − is the place where the standing rigging is fixed to the mast.

Quarter backstays – are standing rigging which supports the topmast sidewise and extend till the chain plates.

Stay − is the standing rigging which serves for fixing masts in the direction of craft ends and holding sails (staysails and jibs).

5.2. Permissible Loads

5.2.1. Wind pressure to the underwater hull.

Calculation of the Permissible load to craft rigging shall be done on the basis of the mean wind force p, KN/m^2;

Calculation for the acceptable square of sails, for at least three main options: main, reduced and storm one shall be done according to the formulas (5.2.1.1-1) − (5.2.1.1-2), (5.2.1.2).

5.2.1.1. Monohull craft.

Wind pressure on the monohull craft:

$$p = k_p . D . l_{max} / S . Z \ , \qquad (5.2.1.1\text{-}1)$$

Where k_p − is the coefficient which considers the square of sails:

k_p = 1.00 − for the main square of sails;

k_p = 0.95 − for the reduced square of sails;

k_p = 0.80 − for storm square of sails;

S − is the square of projection of sails, spars and craft hull to the design waterline at an outlined square of sails, m^2;

Z − is the vertical distance from the centre of buoyancy to the geometrical centre of the square of sails S, m;

γ − is the density of water, kg/m^3;

D − is the craft displacement, KN;

l_{max} − is the largest value of the lever of the righting moment within the limits of the angle of slope up to 60°, m.

For the purpose of the calculation one shall take such state of loading a craft at which the product of $D\ l_{max}$ is the largest one. For craft which length is less than 15 m it is sufficient to take D as the design water displacement $\gamma\ g\ V$, and the largest value of the righting moment within the limits of the heel 90° for l_{max}.

$$S . Z = \sum_{i=1}^{n} S_i Z_i \ , \qquad (5.2.1.1\text{-}2)$$

where S_i − square i-th element;

Z_i − is the vertical distance from the centre of buoyancy to the centre of square of element S_i;

n − is the number of elements by which the square S is divided.

An approximation can be used if full stability characteristics are known:

$D.l_{max} = k_{rm}.M_{30}$, (5.2.1.1-3)

Where k_{rm} M_{30} – according to 5.2.4,

or take an approximate value l_{max} in (5.2.1.1-1):

$l_{max} = 0.750h_0$for sail boats with external ballast;

$l_{max} = 0.675h_0$for other sail boats;

$l_{\max} = 0.629h_0$ − for motor sailers,

Where h_0 = is the initial transverse metacentric height, m.

5.2.1.2. Multihull craft.

Wind pressure applied to multihull craft, кN/m^2:

$p = (M_m + \Delta M)/S.Z$, (5.2.1.2)

Where M_m = is the maximum righting moment, кNm, which is to be taken the largest one from the two maximum righting moments:

For craft with minimum stores and minimum crew;

For craft with full stores and maximum number of people onboard;

ΔM = is the possible increment of the maximum righting moment due to use of arrangements changing craft stability during motion, кNm;

SZ = according to 5.2.1.1.

5.2.2. Inertia loads due to craft oscillating motions.

During operation with trim or during navigation at motion it is essential to take into consideration the inertia forces Q_i (KN) which are perpendicular to the mast:

For the main square of sails −

$Q_j = 0.85\ G_i$; (5.2.2-1)

For reduced and storm square of sails −

$Q_j = (2.11z/\tau^2 + 0.68y/L_{WL} + 0.66)\ G_i$, (5.2.2-2)

Where z, y = is the vertical and horizontal distance from the craft's centre of mass to the centre of mass of rigging elements, m;

τ = is the period of transverse rolling, s, is taken $\tau < 10$ sec;

L_{WL} = craft length at waterline, m;

G_i = the weight of rigging elements, KN.

5.2.3. Compression force due to action of shrouds

In order to define the dimension of masts it is necessary to calculate the maximum compression force P_{st}, KN, originating due to action of shrouds. The force P_{st}, is calculated for as a minimum three variants of square of sails according to formula

$$P_{st} = (\sum P_i . h_i)/b \ , \qquad (5.2.3)$$

where P_i − is the sloping force originating due to wind pressure and masses acting on the *i-th* node calculated by formula 5.3.2.2-1 or 5.3.2.2-2;

h_i – is the vertical distance between the deck and the *i*-th node, m;

b − is the horizontal distance from the mast axis to shroud cleats, m.

5.2.4. Load applied to main mast with typical rigging

Loads to rigging and spars of typical single mast craft or yawls and ketches with the Bermuda sails which is calculated at a permissible load squeezing the main mast due to action of shrouds in relation to force P_{sh}, calculated according to formulas (5.2.4.1-1) and (5.2.4.2).

5.2.4.1. For monohull craft, kN:

$$Psh = (k_{rm} . M_{30})/b_1 \ , \qquad (5.2.4.1\text{-}1)$$

where k_{rm} − is the coefficient of the righting moment:

k_{rm}=1.50 − for craft with external ballast and at $L_{WL} > 7$ m;

k_{rm}=1.40 − for craft with external ballast and at $L_{WL} \leq 7$ m;

k_{rm}=1.35 − for craft without external ballast;

k_{rm}=1.20 − for craft without ballast;

b_1 − is the horizontal distance from the main mast axis to the shroud cleats, m.

M_{30} − is the righting moment at a heel of 30°, кNm.

For craft with external ballast M_{30} it is calculated with the rigging but without stores and crew and for other craft M_{30} the greatest of two moments shall be taken: the moment for the outfitted craft without stores and crew M'_{30} or the moment for the outfitted craft with stores and crew M''_{30}.

If the value M''_{30} is unknown it is allowed to take:

$$M''_{30} = M'_{30}.D'/D'' , \qquad (5.2.4.1\text{-}2)$$

where D' − is the water displacement of an outfitted craft without stores and crew;

D'' − is the water displacement of an outfitted craft with stores and crew.

For craft with the external ballast and compromise design craft the value of $M30$ may be taken following an approximate formula:

$$M_{30} = 0.44 h_0 D , \qquad (5.2.4.1\text{-}3)$$

where D, h_0 – is the water displacement and metacentric height at relevant loading.

5.2.4.2. For multihull craft, кN:

$$P_{st} = (M_m + \Delta M)/b_1 , \qquad (5.2.4.2)$$

where M_m− is the maximum righting moment according to 5.2.1.2;

ΔM − is the possible increment of the righting moment according to 5.2.1.2;

b_1 − is the horizontal distance from the gross mast of the main mast to the shroud cleats, m.

5.2.5. **Load on after mast with the typical rigging**

Due to action of the shrouds the force P_{st}, squeezing the after mast of the typical Bermuda yawls and ketches is calculated by formulas:

For monohull craft −

$$P_{st} = k_b(k_{np} M_{30}/b_2) , \qquad (5.2.5\text{-}1)$$

For multihull craft −

$$P_{st} = k_b(M_m + \Delta M)/b_2 , \qquad (5.2.5\text{-}2)$$

Where k_b = 0.222 (0.226) − if the height of the after mast does not exceed 0.58 height of the main mast;

k_b = 0.226 (0.271) − if the height of the after mast does not exceed 0.68 height of the main mast;

k_b = 0.313 (0.376) − if the height of the after mast does not exceed 0.75 height of the main mast.

Values in brackets are applied to masts which have an additional load imposed by the preventer stay.

For the after mast with a height more than 0.75 height of main mast the load is to be calculated in accordance with 5.2.3;

k_{rm} − coefficient of the righting moment according to 5.2.4.1;

M_{30} − is the righting moment at a slope of 30°, кNm;

M_m− is the maximum righting moment according to 5.2.1.2;

ΔM − is the possible increment of the righting moment according to 5.2.1.2;

b_2 − is the horizontal distance from the after mast to the shroud cleats of the after mast, m.

5.2.6. **Other loads.**

Each step shall endure a load of at least 200 kg, if steps are fixed to climb on the mast.

5.3. Rigging dimensions

5.3.1. General

5.3.1.1. Projection of angle β between the shrouds and the mast (see table 4.5.2) on the plane perpendicular to the centreline plane shall not be less than 10°. The usage of the rigging with angles β < 10° is a matter of special consideration by the Register.

5.3.1.2. The rig without check stays and backstay may be used for the craft with designed displacement less than 1200 kg. In this case, the projection of angle α between the lower shrouds and the mast (see table 4.5.2) on the centreline plane shall not be less than 5°.

5.3.1.3. It is permitted to replace the fore lower shrouds with an inner forestay. The angle between this inner forestay and the mast shall not be less than 5° for rigging types "*a*" and "*b*" (see Table 4.5.2) and 7,5° − for a fractional rig.

5.3.1.4. While using single aft lower shrouds without the inner forestay (see Table 4.5.2, rig type "*в3*") for the fractional rig, spreaders shall be diverged aft of the midcraft plane for an angle, which projection on the horizontal plane is from 20° up to 32°.

The length of the spreaders shall be such that the projection of angle α (between the upper shrouds inclined aft and the mast) on the centreline plane is not less than 5° and the projection of angle β (between these shrouds and the mast) on the plane perpendicular to the centreline plane is not less than 10°. The lower shrouds shall also be inclined aft in such a way that the projection of angle a (between these shrouds and the mast) on the centreline plane is not less than 5°.

The angle of deviation of the spreaders from the midcraft plane for the crafts with "*a*" and "*b*" rigging types (Table 4.5.2), is subject to the Register special consideration.

5.3.2. Dimensioning of the rigging by the general method

5.3.2.1. In order to define permissible external loads on the mast, equivalent areas of sails *F* shall be outlined as follows:

.1 For Bermudian rig the equivalent area *F* = 0,5 *S*, which falls at the mast and is taken in the form of a right triangle (see Fig. 4.5.2);

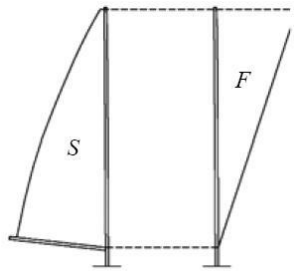

Figure 4.5.2

.2 For gaff rig the area of sail *S* is divided into three parts S_1, S_2 and S_3;

The equivalent area *F* falling at the mast (see Fig. 4.5.3) consists of:

Area S_2 in the form of the right triangle;

Area 0.67 S_3 concentrated at the place of a gant-line block;

Area 0.33 S_1 concentrated at the place of a gaff halyard block;

.3 For a jib, equivalent area *F* falling at the mast is concentrated at the stay fixing point and is derived by the formula:

$F = Sb/(a + b)$, (5.3.2.1.3)

Where *a* and *b* − distance from the fittings up to the sail area centre (see Fig. 4.5.4);

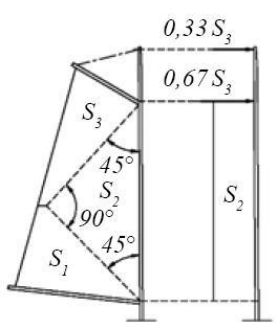

Figure 4.5.3

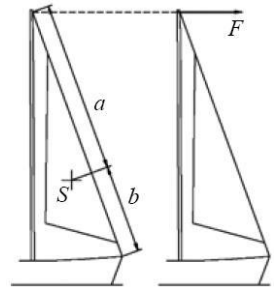

Figure 4.5.4

.4 For a square sail, equivalent area of sail *F* is concentrated at the place of hanging the yard (see Fig. 4.5.5) and is: F = 0,675 S.

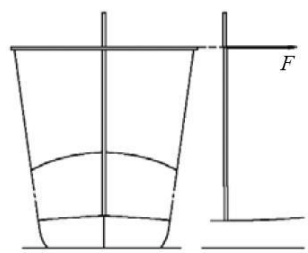

Figure 4.5.5

Other ways of distributing areas of the rig are also allowed.

5.3.2.2. Action of force P_i determines the permissible external load on the mast. kN, applied at the points of action, i.e. in the mast knots. The formulae determines the force , at least, three variants of the sail area :

for monohulls −

$$P_i = F_i p + Q_i \ , \qquad (5.3.2.2\text{-}1)$$

for multihulls -

$$P_i = F_i p \ , \qquad (5.3.2.2\text{-}2)$$

where F_i − equivalent area of the sails, m^2, which falls at the node and is conformed according to 5.3.2.1;

p − average wind pressure for this variant of the rig, which is determined according to 5.2.1;

Q_i − inertial force determined in 5.2.2 and equivalent to *i*-th node

5.3.2.3. The methods which are commonly recognized in the mechanics, shall determine the Force N_i occurring in the shrouds under load P_i , at least, three variants of the sail area (main, reduced and storm). It is also permissible to determine loads on the

shrouds by a graphic method or by calculations equal to drawing of Cremona diagram using simplifications (for example, the rigging of a lee side is not taken into account and the mast knots are considered to be hinges).

5.3.2.4. Dimensions of each shroud shall be determined by such variant of the sail area, at which it will be acted upon by the maximum force N_i.

Breaking load R_i, k N, is determined by the formula:

$$R_i = k_n N_i \ , \qquad (5.3.2.4)$$

Where k_n − safety factor:

k_n = 3.0 − for the lower shrouds;

k_n = 2.5 − for other shrouds;

N_i − force, kN, occurring in the shroud under action of the permissible load, which is determined according to 5.3.2.3.

5.3.2.5. According to the wind pressure influence breaking load for the stays R_{st}, kN, shall be derived on the relevant jib by formula

$$R_{st} = 8.125(S.p)_{max} \ , \qquad (5.3.2.5\text{-}1)$$

where S − area of the jib lifted on this stay, m^2;

p − average wind pressure according to 5.2.1.

It is necessary to take the greatest of possible values $S{\cdot}p$ determined for different permissible variants of the sail area.

However, force R_{st} cannot be less than that determined depending on the breaking force of the strongest shroud R:

$$R_{st} \geq k_w R \ , \qquad (5.3.2.5\text{-}2)$$

where k_w – stay strength factor:

k_w = 1.00 − for the lowest stay and inner forestay;

k_w = 0.75 − for a topmast stay and quater backstay

5.3.2.6. Breaking load R_a, kN, for the backstay, check stay, quarter backstay and topmast shrouds shall be derived by the formula:

$$R_a \geq k_a k_r R_{st}(sin\beta_{st}/sin\beta_a) \ , \qquad (5.3.2.6)$$

Where k_a − backstay coefficient:

k_a = 1.0 − for the check stay, quarter backstay and topmast shrouds;

k_a = 1.15 − for the backstay;

k_a = 1.20 − for the backstay, if using a boom for the jib;

k_a = 1.25 − for the backstay, if using a trysail with the foot length more than 1.3 J, see figure 5.1.2.1;

k_r − load distribution factor:

k_r = 1.00 − for one backstay, as well as for check stays;

k_r = 0.58 − for double backstays;

k_r = 0.38 − for quarter backstay and topmast shrouds;

R_{st} − breaking force of the relevant stay determined according to 5.3.2.5;

β_{st} − angle between the stay and the mast;

β_a − angle between the mast and: the backstay or check stay or quarter backstay or topmast shroud.

5.3.2.7. If using a tensioner inducing stress N_n in the rope, the breaking force of this rope R_{st} shall not be less than that derived by the formula:

$$R_{st} = 2.6N_n \ . \qquad (5.3.2.7)$$

5.3.2.8. It is essential for lugsails and gaff sails to check that forces taking place in the backstays, check stays, quarter backstay and topmast shrouds under the wind pressure at the heading:

p = 0,250 kN/m^2 − for the main sail area;

p = 0,572 кН/м^2 − for the reduced sail area,

do not exceed 0,5 times of the breaking force of the used ropes.

5.3.3. Rigging of some typical single-masters.

5.3.3.1. If the rigging of a single-master is typical and complies with tables 4.5.1 and 4.5.2 fulfilling the condition:

$$IJ/PE \leq 1.6 \ , \qquad (5.3.3.1\text{-}1)$$

Breaking forces R in the shrouds, stays and backstays may be determined by the formula:

$$R = kP_{sh} \ , \qquad (5.3.3.1\text{-}2)$$

Where k − coefficient from table 4.5.2;

P_{sh} − force compressing the mast under the action of the shrouds according to 5.2.4;

I – fore triangle height, m;

J – fore triangle lower base, m;

E − mainsail foot length, m;

P − height to which the mainsail is risen, m, see Fig. 4.5.1.

5.3.3.2. The backstays shall be installed to confirm enough tension of the post stay if the lower shrouds are positioned in the mast plane (shroud stay; rigging types "*a3*" and "*b3*").

5.3.3.3. It is allowed to take coefficients *k*' derived by the formula below as a replacement for the relevant coefficients *k* specified in table 4.5.2 to decide breaking loads for the shroud if angle β between the shrouds and the mast in the projection on the plane perpendicular to the craft centerline plane exceeds 10°:

$$k' = k(sin10°/sin\beta)\ . \qquad (5.3.3.3\text{-}1)$$

Table 4.5.1: Rigging types

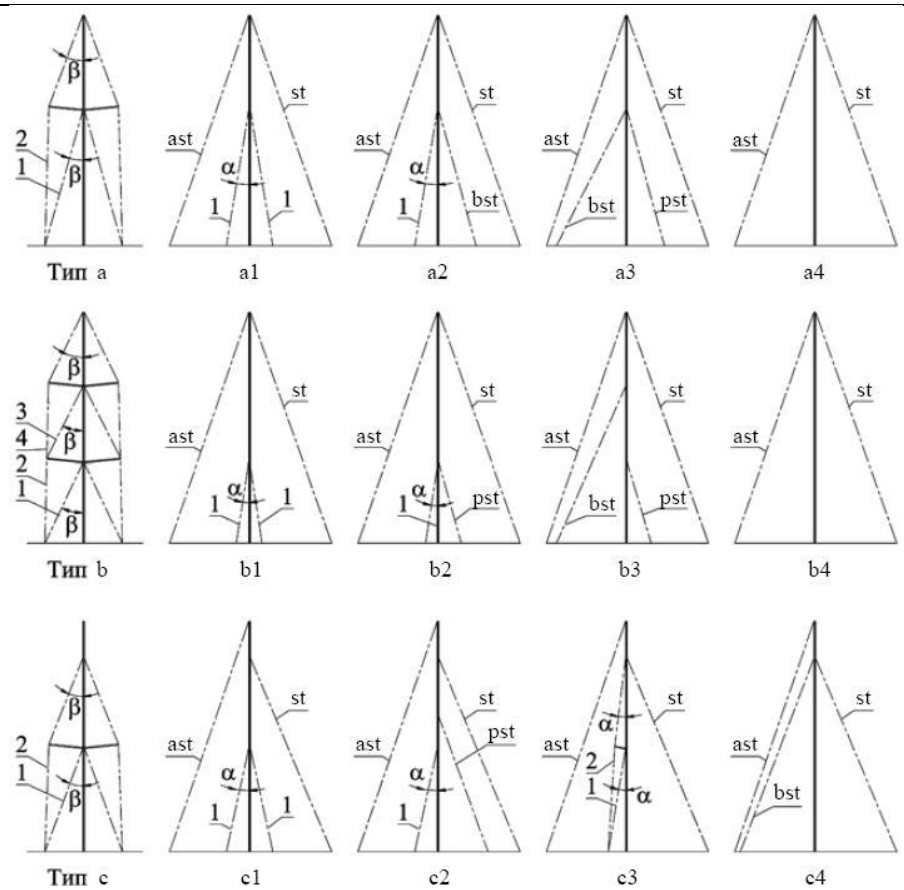

Note : ast – afterstay; bst – backstay; st – stay; pst – post stay

Table 4.5.2: Values of coefficients k for the mainmast rigging

Rigging type	Shroud 1 single	Inner forestay (pst)	Shroud 1 double	Shroud 2	Shroud 3	Shroud 4	Stay (st)
Type а	1.4	1.3	1.3	1.15	−	−	1.2
Type б	1.3	1.25	1.25	1.5	0.8	1.15	1.2
Type в	1.4	0.8	1.3	1.2	−	−	1.1

If angle *α* between the inner forestay and the mast exceeds 5° for the masthead rig or 7.5° − for the fractional rig, it is allowed to take coefficient *k*'' determined by the formula below instead of coefficient *k* specified in table 4.5.2:

$$k'' = k(\sin\ 5°(or\ 7.5°)/sin\alpha)\ . \qquad (5.3.3.3\text{-}2)$$

Coefficient *k*" shall not be taken less than 0.8*k*.

5.3.3.4. If tension of the backstay is over the breaking load of the forestay R_{fst}, kN, it is necessary to take the greatest of the two values, determined according to 5.3.3.1 and by formula:

$$R_{fst} = 2.25(sin\beta_{fst}/sin\beta_{fst})N_n\ , \qquad (5.3.3.4)$$

where β_{fst} − angle between the backstay and the mast;

β_{fst} − angle between the forestay and the mast;

N_n − backstay stress under tension, kN

5.3.4. Rigging of typical yawls and ketches

5.3.4.1. In accordance with 5.2.5., calculations for the mainmast rigging of Bermudian yawls and ketches may be made similarly as for the single-master.

5.3.4.2. The formula (5.3.3.1-2) determines breaking loads *R* in the rigging, taking relevant values of the coefficients from table 4.5.3 and the value of force P_{st} for it may be determined according to 5.2.5, if the rigging of the mizzenmast is standard and corresponds to that which is specified in figure 4.5.6, .

Table 4.5.3: Values of the coefficients for the mizzenmast rigging

Shroud 1 single	Shroud 1 double	Shroud 2	Shroud 3	Stay
1.26	0.66	0.60	0.95	1.20

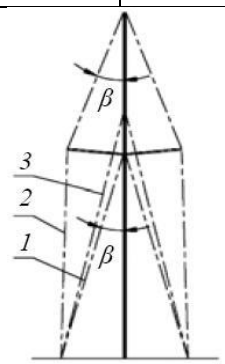

Figure 4.5.6: Standard rigging of Bermudian yawls and ketches

5.3.5. Bowsprit rigging

5.3.5.1. The force in the ropes or chains of whisker stays shall not exceed 0.9 times of their breaking forces and if using rods – the limit of plasticity shall not be exceeded, if a bowsprit is under forces equal to 0.625 times of the stay breaking loads in the craft centerline plane.

5.3.5.2. Transverse load on the bowsprit shall be 0.165 times of the relevant stay breaking load. Internal forces occurred in water backstays under this load shall not exceed 0.9 times of the breaking loads of the accepted rope or chain and if using rods – the limit of plasticity shall not be exceeded.

5.3.6. Rigging screw and fitting

Depending on the breaking load of the relevant rope the formulae determines the breaking force of the required rigging screw and fittings R_o, kN:

$$R_0 = k_0 R \ , \qquad (5.3.6)$$

Where k_o − coefficient of the rigging screw and fittings:

k_o = 1.20 − for the shroud rigging screw;

k_o = 1.35 − for the stay rigging screw;

k_o = 1.35 − for the shroud foot points;

k_o = 1.50 − for the stays;

k_o = 1.10 − for the fittings on the masts;

R − design breaking force of the relevant rope, kN.

Under load equal to 0.9 times of the design breaking force of the relevant rope shall not be torn.

5.4. Spars calculations

5.4.1. Masts.

5.4.1.1. For the craft with a standard rigging complying with 5.3.1.1, the moments of cross sectional area inertia of mast unsupported spans if bending athwart-craft I_x, cm^4, as well as the moment of cross sectional area inertia of the mast unsupported spans if bending in the craft centreline plane I_y , cm^4, shall not be less than determined by the formulae:

$$I_x = k_1 m P_{sh} l^2 \; ; \qquad (5.4.1.1\text{-}1)$$

$$I_y = k_2 m P_{sh} h^2 \; , \qquad (5.4.1.1\text{-}2)$$

Where k_1 − unsupported span coefficient specified in table 4.5.4;

k_2 − stay coefficient determined by fig 4.5.7 or according to 5.4.1.2;

k_3 − coefficient of mast fastening;

k_3 = 1.0 − for the masts extended through a deck;

k_3 = 1.22 for the masts installed on a deck;

m − coefficient taking into account material characteristics;

m = 0.034 − for steel

m = 0.100 − for aluminium alloy;

m = 0.725 − for timber (pine, spruce);

m = 7060/E − for other materials, where E − Young's modulus, MPa;

l − length of the unsupported span considered, m;

h − vertical distance from the deck or mast bottom, if the mast is supported by the deck, to the fixing point of the lowest stay, which carriers sails, m;

P_{sh} − force compressing the mast under action of the shrouds, determined according to 5.2.3, 5.2.4 or 5.2.5; when determining the moments of inertia for the upper unsupported spans of the mast, force P_{sh}, shall be reduced by the value:

0.14 − of the breaking force of the double lower shrouds;

0.23 − of the breaking force of the single lower shroud;

0.20 − of the breaking force of other shrouds, which are below the unsupported span considered and do not load it; shrouds of the freeboard shall also be considered.

Table 4.5.4: Values of unsupported span coefficients k_i

Rigging type	Mast column	Other unsupported spans
Without spreaders	2.5 k_3	−
One cross-tree (pair of spreaders)	2.5(2.4) k_3	3.5(3.6)
Two cross-tree and more	2.7 k_3	3.8
Values in the brackets refer to the rigging of "*c*" type.		

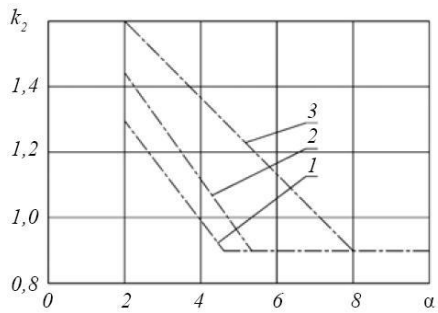

Figure 4.5.7: Stay coefficient k_2 for rigging types a_1, a_2, c_1 and c_2

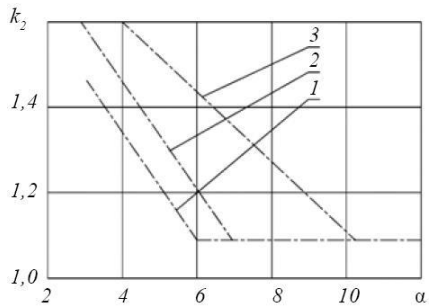

Figure 4.5.8: Stay coefficient k_2 for rigging types b_1 and b_2

Notes: On Fig. 4.5.7 and 4.5.8:

1 − single (side) lower shrouds;

2 – double (side) lower shrouds;

3 − mast post stays.

When using stays and backstays of a higher strength, which take forces caused by tensioner action, force P_{sh} shall be increased determining an increment ΔP_{sh} to force P_{sh} by the formula:

$$\Delta P_{sh} = 0.208\Delta R_1(\sin(\beta_1 + \beta_2)/sin\beta_1), \quad (5.4.1.1\text{-}3)$$

Where ΔP_1 – taken increase of the rope breaking force caused by the action of the tensioner fixed on it, kN;

β_1 − angle between shroud 1and the mast (see table 4.5.1);

β_2 − angle between shroud 2 and the mast (see table 4.5.1);

The greater of the two coefficients k_2 shall be taken for calculations when using the single (side) lower shrouds and inner forestay.

5.4.1.2. For the single lower shrouds placed in the mast plane (α = 0°), the stay coefficient k_2 = 1.65 for the rigging type "*a3*" or k_2 = 1.85 − for the rigging type "*b3*" shall be taken for calculating the moments of inertia I_y , if the inner forestay and check stays are available.

The stay coefficient k_2 = 2.25 shall be considered for calculating the moments of inertia I_y if the single lower shrouds are used without the mast post stays and back stays (types "*a4*", "*b4*" or "*c4*"). In the case of the rigging type "*a3*",the stay coefficient k_2 = 1.25 shall be taken .

In the case of rigging with a great number of the spreaders (cross-trees), coefficient k_2 shall be considered the same as for the rigging type "*b*".

5.4.1.3. The following models shall be taken for mast calculations for craft with non-typical standing rigging:

See Fig. 4.5.9, if bending athwart-craft − a girder elastically fixed at one end and simply supported at the other end, with a rigid support at the lower shroud fixing point.

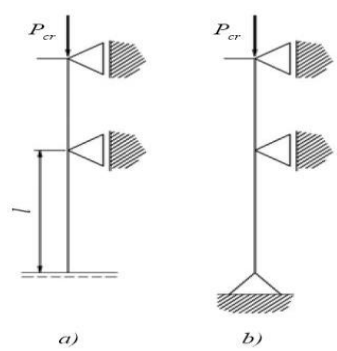

Figure 4.5.9

See Fig. 4.5.10, if bending in the craft centreline plane − a girder elastically fixed at one end and simply supported at the other end, with an additional elastic support at the lower shroud fixing point.

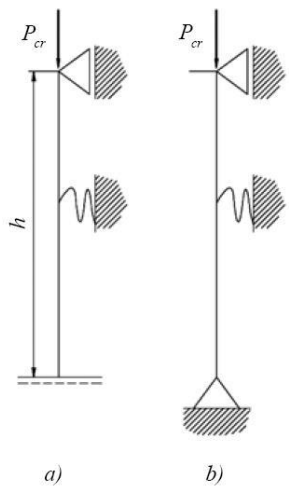

Figure 4.5.10

The mast housing influence shall considers the elastic fixing in a mast hole section (Fig. 4.5.9 a and 4.5.10 a). Instead of the elastic fixing in the mast hole section, a simple support shall be used for the mast which stands on the deck. (Fig. 4.5.9 b and 4.5.10 b).

A value of critical force P_{cr}, kN, for calculations, derived by the formula shall be taken:

$$P_{cr} = 1.6(P_{sh} + 0.385P_c) \ , \qquad (5.4.1.3)$$

not less than:

$P_{cr} = 2.96\ P_{sh}$ − for the masts loaded with the stay, which carries a sail;

$P_{cr} = 2.32\ P_{sh}$ − for the remaining masts,

According to 5.2.3, 5.2.4 or 5.2.5 where P_{sh} − force, kN, compressing the mast under action of the shrouds determined;

P_c − sum of components of the stay and backstay breaking forces, kN, directed along the mast axis.

5.4.1.4. It is allowed not to calculate the moments of inertia I_x of the unsupported spans positioned above the post for the masts with constant cross section holding at least up to 0.7 times of their height, which moment of cross section inertia near the masthead is not less than 0,6 times of the moment of cross section inertia of the part with constant cross section, if their length does not exceed the post length.

5.4.1.5. As per the specifications made in 5.4.1.4, for the masts with variable cross section or with more taper than each unsupported span shall be divided into two or three equal parts and the moments of inertia I_x and I_y, shall be calculated on the basis of their average values I, cm^4, derived by the formulae:

$\mathrm{I} = 1/6(\mathrm{I}_1 + 4\mathrm{I}_2 + \mathrm{I}_3)$ − if the unsupported span is divided into two parts; (5.4.1.5-1)

$\mathrm{I} = 1/8(\mathrm{I}_1 + 3\mathrm{I}_2 + 3\mathrm{I}_3 + \mathrm{I}_4)$ − if the unsupported span is divided into three parts, (5.4.1.5-2)

where I_1, I_2, I_3 and I_4 − values of the moments of inertia I_x or I_y at the points of unsupported span division without taking account of local forces and stresses.

It is required to check that the moment of inertia of the weakest section shall not be less than 0.3 times of the moment of inertia of the strongest section.

5.4.1.6. It shall be checked when using the fractional rig that the mast bending strength factors W_x and W_y, cm^3, at the intersection of the stay or shroud fixing point are not less than that confirmed by the formulae:

$$\mathrm{W_x} = (1000/\sigma).\mathrm{M_{30}}.(\mathrm{z_x}/\mathrm{P})\ ; \qquad (5.4.1.6\text{-}1)$$

$$\mathrm{W_y} = (1000/\sigma).\mathrm{R}.\mathrm{z_y}.\sin\beta_{\mathrm{st}}\ ; \qquad (5.4.1.6\text{-}2)$$

Where σ − permissible stresses for the mast material, when bending, M Pa;

M_{30} − righting moment according to 5.2.4;

z_x – distance, m, from the masthead to the shroud fixing point, see fig. 4.5.11;

P − mainsail hoist, m, according to 5.3.3.1;

R – breaking force for the stay, kN, according to 5.3.3.1;

z_y – distance, m, from the masthead to the stay fixing point, see fig.4.5.11;

β_{st} − angle between the mast and the stay.

At the stay or shroud fixing point, bending strength factors on the masthead shall not be less than 0.2 times of the relevant factor. According to formula (5.4.1.6-2), if a stay/jackstay providing equal strength of the mast is used, calculation is not needed.

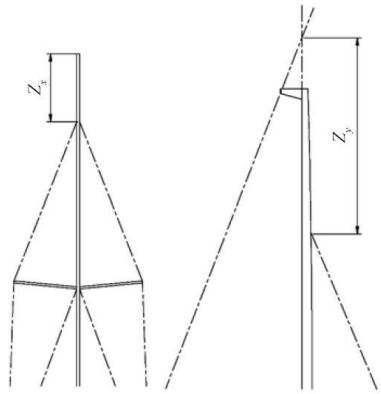

Figure 4.5.11: Masthead sizes

5.4.1.7. Criterion of the previous choice of the mast cross sectional area is:

Reaching the minimum mass, i.e. the use, as a rule, of hollow-built wooden masts and tubular masts of light metal alloys;

Reaching the most possible rigidity of the mast in the direction of the stay action, which is determined by the moments of inertia of its cross sectional area relative to the craft centreline plane.

Walls of the hollow-built wooden masts shall not be thinner than 18 per cent of the relevant cross section size. It is recommended to take the wall thickness equal to 20 % of the relevant cross section size.

5.4.2. Spreaders

5.4.2.1. The moment of inertia of the spreader cross sectional area I_{xp}, cm^4, related to the *x* and *y* axes shall not be less than calculated by formula:

$$I_{cr} = m_m . R_{cr} . l^2{}_{cr} \ , \qquad (5.4.2.1)$$

where m_m − material coefficient:

m_m = 0.06 − for steel;

m_m = 0.18 − for aluminium alloys;

m_m = 1.00 − for timber (ash, oak);

m_m = 12700/E − for other materials, where E − Young's modulus, M Pa;

R_{cr} – force compressing the spreader, kN;

l_{cr} – spreader length, m.

5.4.2.2. Spreader stability and compression strength and strength of the spreader fittings shall be checked underload equal to 1.25 R_{cr}.

5.4.2.3. Fixing of the shroud mast be confirmed by the Fitting structure and the spreader shall not move along the shroud.

5.4.3. Booms

5.4.3.1. The cross section bending moduli, cm^3, related to horizontal W_y and vertical W_z axes shall not be less than determined by the formulae:

$$W_y = m_g . P_{st} . l_g \; ; \qquad (5.4.3.1\text{-}1)$$

$$W_z = 0.66 W_y \; , \qquad (5.4.3.1\text{-}2)$$

where m_g – coefficient taking into material characteristics:

m_g = 0.125 − for carbon steel;

m_g = 0.250 − for aluminium alloys with ultimate tensile strength R_m = 200 MPa;

m_g = 0.610 − for timber (pine);

m_g = 50/R_m − for other materials R_m, MPa;

P_{st} − force, N, compressing the mast under the action of the shrouds determined according to 5.2.3, 5.2.4 or 5.2.5;

l_g − boom length, m.

5.4.3.2. The way of fastening and reefing the sails shall be taken into account when designing the booms. While designing a boom fitting, its effective fastening to the mast and fastening of a sheet and topping lift to it shall be taken into account. It shall be possible that the fitting of a front boom end shall meet the conditions of the hinge, i.e. rotation of the boom about three axes.

5.4.4. Gaffs.

Choice of the gaffs is subject to Register special consideration.

5.4.5. Bowsprits.

5.4.5.1. Bowsprit compression stresses under load equal to 0,625 times of the stay breaking force shall not be more than the followings, if an angle between the bob stay and the bowsprit axis is 14° and more:

0.68 times of the ultimate compression strength – for wooden bowsprits;

0.9 times of the yield point − for metal bowsprits

5.4.5.2. Bowsprit bending and compression stresses shall be determined under load equal to 0,625 times of the stay breaking force, if an angle between the bob stay and the bowsprit axis is less than 14°,. The sum of the stresses shall not exceed:

0.85 times of the ultimate compression strength – for wooden bowsprits;

of the yield point − for metal bowsprits.

5.5. Spar and rigging material

5.5.1. It is required that the materials of spars, rigging, bindings and rigging fittings shall meet the requirements of Part XI “Materials”. In compliance with the Register recognized technical normative documents the spar and rigging products shall be manufactured.

5.5.2. In manufacture of standing rigging stainless steel wire ropes without fiber shall be used. In compliance with the recognized standards, the standing rigging wires shall have zinc coating.

Rod steel and pudding chains may be used in case of need.

5.5.3. Recommendations has been done that in running rigging use shall be made of a vegetable and synthetic fiber. It is recommended to use synthetic ropes with a wrapped multistrand twisted core for craft not fixed with rigging winches.

In case that provision was made for the relevant winches, steel wire ropes will be allowed in the running rigging.

5.6. Mounting and operation of rigging

5.6.1. A proper installation of mast passing through the deck shall be done in the mast hole. The following fixation is recommended:

Wedging − for wooden masts;

Using rubber gaskets around the mast − for thin-walled metal masts.

In rigging of type “*a3*” or “*b3*”, refer to Table 4.5.1, bow-to-stern movement shall be possible and athwartships movement shall be restricted.

The heel of a keel-stepped mast shall be securely fastened to the mast step or adjoining structure.

5.6.2. Recommendation has been done to tension the rigging so as to:

Preclude mast deflection in a direction perpendicular to the craft centreplane, at the same time, relevant mast deflections from the straight line in the craft centreplane are permitted;

Ensure that the windward shrouds are not sagging at the heel of 35° that corresponds to the initial tension equal to 0.16 – 0.18 of the breaking strength for the wire rope used (rigging shrouds of type “*а3*” or “*б3*”, refer to Table 4.5.1, shall be eased well);

Under the conditions of craft sailing by the wind, it is suggested to ensure that the shroud sagging does not exceed 0.04 of their length, loads from the sails acting on the stays.

5.6.3. Recommendation has been made to use hinges on all ties, besides on both ends of forestays.

5.6.4. Rigging fittings shall be of appropriate construction precluding occasional ease of tension.

5.6.5. It is essential to protect wooden masts with electric wires therein against possible ingress and accumulation of water inside the mast.

5.6.6. The mast of a sailing craft or sailing motor craft shall have at least two halyards capable of maintaining the sail.

5.7. Sails

5.7.1. Selection of sails.

5.7.1.1. Each craft shall have a set of sails in order to ensure its operation in the prescribed navigating conditions.

5.7.1.2. In order to satisfy the requirements as stated in Table 4.5.5 each craft shall have a mandatory set of storm sails.

Table 4.5.5: Mandatory set of storm sails

Type of sails	Design category of boat						
	R, R100 and **R200**	**B**	**R0**	**C_1**	**C_2**	**C_3**	**D**
Trysail	+	+	-	-	-	-	-
Storm staysail	+	+	-	-	-	-	-
Reduced staysail	+	+	+	+	-	-	-
Mainsail reefing	+	+	+	+	+	-	-

5.7.1.3. A patent reef and staysail furling device may substitute for a reduced staysail and mainsail reefing for craft having a length of the hull of up to 12 m of design categories **R0**, **C_1** or **C_2**.

5.7.1.4. Alternatively to 5.7.1.3, for craft of design categories **R0**, **C_1** or **C_2**, a trysail may be provided for instead of a mainsail reefing.

5.7.1.5. For craft fixed with an effective wing mast trysail is not required.

5.7.2. Dimensions and construction of sails.

5.7.2.1. Trysail.

The trysail area shall be not greater than 0.175 P E, where P is the mainsail hoist; *E* is the mainsail foot length.

The trysail shall be capable of being sheeted independently of the boom. The storm trysail shall have neither headboard nor battens.

5.7.2.2. Storm staysail.

The storm staysail area shall be not greater than 0.05 I^2, with the luff maximum length 0.65 *I*; where I is the height of the fore triangle. The storm staysail shall be capable of being set independently of the luff-groove device.

5.7.2.3. Reduced staysail.

The reduced staysail area shall be not greater than 0.135 I^2; where I is the height the fore triangle.

5.7.2.4. Possibility of mainsail reefing.

It should be possible to reduce the mainsail area by reefing. Moreover, the length of the reefed mainsail luff shall be not greater than 0.6 P in the most reefed condition.

5.7.3. Sails material.

5.7.3.1. The present requirements to cloth used in fabrication of sails apply to the craft with deadweight of 150 tons and less.

Special synthetic cloth may be used instead of sailcloth subject to availability of the relevant manufacturer's certificate confirming its intended purpose.

The heavy-weather staysail shall not contain aromatic polyamides, carbon fibers and similar fibers.

It is recommended that every storm sail should either be of highly visible colored material or should have a highly visible colored patch of red, orange or yellow added on each side.

5.7.3.2. In manufacture of sails the following cloth types are recommended:

Gaff sails and forestaysails − cloth No.3.

Outer and inner staysails − cloth No.4.

Topsail and staysail − cloth No.5.

Heavy-weather staysails − cloth No. 2 and No.1.

SECTION 6 SIGNAL MASTS

Contents

6.1. General

6.1.1. The present Section deals with the given requirements refer only to the signal masts, i.e. the masts which are planned for carrying the signal means: navigation lights, signal shapes, aerials, etc. It is essential that the masts or their parts which carry derrick booms or other cargo handling gear in addition to the signal means, such masts or their parts shall be in compliance with the requirements of Rules for the Cargo Handling Gear of Sea-Going Ships .The requirements of 6.2 to 6.4 do not apply to berth-connected ships. It is required that the signal masts of berth-connected ships shall be planned to carry signal means.

6.1.2. Arrangement, height and provision of signal means on the signal masts shall be in compliance with the requirements of 11.3.

6.1.3. Installation of special machinery shall be done for their operation or provision shall be made for appropriate connection with other deck machinery, if the signal masts are collapsible. The drive of the machinery may be manual operated one, on condition that the machinery is self-braking and the load on the handle is not more than 160 N at any moment of jackknifing or hoisting the mast.

6.2. Stayed masts

6.2.1. The outside diameter *d* and the plate thickness *t*, in mm, at the heel of the masts made of steel having the upper yield stress from 215 up to 255 M Pa and stayed by two shrouds on each side of the ship, shall not be less than

$$d = 22l \; ; \qquad (6.2.1\text{-}1)$$

$$t = 0.2l + 3 \; , \qquad (6.2.1\text{-}2)$$

Where l − mast length, in m, from the heel to the shroud eyeplates.

While the thickness of the mast plates is sustained constant throughout the length *l,* gradually the diameter of the mast may be decreased upwards to a value of 0.75 *d* at the shroud eyeplates.

The mast length from the shroud eyeplates to the top shall not exceed 1/3 *l*.

The mast shall be stayed by the shrouds as follows:

i. horizontal distance *a*, in m, from the deck (or bulwark) stay eyeplate to the transverse plane through the mast stay eyeplate shall not be less than

$$a = 0.15h \; ,$$
(6.2.1.1)

where *h* − vertical distance, in m, from the mast stay eyeplate to the deck (or bulwark) stay eyeplate;

ii. horizontal distance *b,* in m, from the deck (or bulwark) stay eyeplate to the longitudinal plane through the mast stay eyeplate shall not be less than

$$b = 0.30h \; ; \qquad (6.2.1.2)$$

iii. the value *a* shall not exceed the value *b*.

6.2.2. As per the specifications made in 6.2.1, the actual breaking strength *F* of the ropes, in kN, used for the mast shrouds shall not be less than

$$F = 0.49(l^2 + 10l + 25) \; . \qquad (6.2.2)$$

In other respects, the ropes for shroud shall be in compliance with the requirements of 3.15, Part XIII "Materials" of Rules for the Classification and Construction of Sea-Going Ships.

As referred to above, the loose gear of shrouds (shackles, turnbuckles, etc.) shall be such that their safe working load is not less than 0.25 times the actual breaking strength of the ropes.

6.2.3. Where:

The mast is made of high tensile steel, light alloys, glass-reinforced plastics or wood (the wood shall be of the 1st grade);

The mast is stayed in a way other than the specifications made in 6.2.1;

The mast is fitted with other equipment having considerable weight, such as radar reflectors with platforms for their servicing, "crow's nests", etc., proceed as specified in 6.4, additionally to a yard arm, lights and signal shapes.

6.2.4. In accordance with the recognized standards the wires of shrouds shall have a zinc coating.

6.3. Unstayed Masts

6.3.1. The outside diameter *d* and the plate thickness *t*, in mm, at the heel of masts made of steel having the upper yield stress from 215 to 255 M Pa shall not be less than:

$$d = 3l^2(0.674l + a + 13).\left(1 + \sqrt{1 + \frac{51.5 \cdot 10^4}{l^2(0.674l + a + 13)^2}}\right).10^{-2} \; ; \qquad (6.3.1\text{-}1)$$

$$t = 1/70d \; , \qquad (6.3.1\text{-}2)$$

Where *l* − length of the mast from heel to top, in m;

a − elevation of the mast heel above centre of gravity of the ship, in m.

The outside diameter of the mast may be gradually decreased upwards to a value 0.5 *d* at the distance 0.75 *l* from the heel.

In no case is the thickness of the mast plate to be less than 4 mm.

The mast heel shall be firmly fixed in all directions.

6.3.2. Where:

The mast is made of high tensile steel, light alloys, glass-reinforced plastics or wood (the wood shall be of the 1st grade);

As per specifications made in 6.4, additionally to a yard arm, lights and signal shapes, the mast is fitted with other equipment having considerable weight, such as radar reflectors with platforms for their servicing, “crow’s nests”, etc.

6.4. Masts of Special Construction

6.4.1. In the cases specified in 6.2.3 and 6.3.2 as well as where installations of bipod, tripod and other similar masts are done, detailed strength calculations of these masts shall be achieved. For consideration, these calculations shall be submitted to the Register.

6.4.2. The calculations shall be done on the supposition that each part of the mast is affected by a horizontal force F_i , in kN:

$$F_i = (m_i 4\pi^2/T^2(\theta z_i + r.\sin\theta) + m_i g.\sin\theta + pA_i.\cos\theta).10^{-3} \ , \qquad (6.4.2)$$

where m_i − mass of each part, in kg:

z_i − elevation of the centre of gravity of each part above that of the ship, in m;

A_i − projected lateral area of each part, in m^2;

T − rolling or pitching period, in s;

θ − amplitude of roll or pitch, in rad;

r − wave half-height, in m;

g − 9,81 m/s^2 – acceleration due to gravity;

p − specific wind pressure, in Pa, taken according to a ship category.

The calculations shall be assessed both for rolling and pitching of the ship; and θ, in rad, being taken as corresponding to an angle 40° corner at roll and of 5° corner – at pitch.

6.4.3. The parts of the mast shall be in compliance with the requirements of 5.4.1 under the loads specified in 6.4.2.

SECTION 7 RAILING AT OPEN DECKS

Contents

7.1. General

7.1.1. It is essential that bulwark or guard rail, rope or tube rail of sufficient strength with a height of at least 900 mm above the deck and a distance between the rails not exceeding 300 mm shall protect the exposed spaces of decks where people may stay along the perimeter, unless provided otherwise in 7.1.3 and 7.1.4. The Distance between the lower rail of pulpit and craft structure (deck) shall not exceed 360 mm. The height of the lowest rail above the working deck shall not exceed 230 mm for on board of all craft with intermediate rails.
It is required that the nearby surfaces shall also be safe for people moving in all prescribed situations.

Intervals between the guard rail bars shall not exceed 2.2 m.

These passages shall be fixed with safe closures when the entire guard line is disturbed by side or aft passages.

7.1.2. On board craft, the guard rail shall be fitted with a net with mesh diagonal size not exceeding 100 mm where accommodation of children is provided by the design.

7.1.3. It is mandatory that the berth-connected craft shall have guard rail of at least 1100 mm height, therewith a distance between intermediate rails shall not exceed 250 mm and a distance between the deck and the lowest intermediate rail shall not exceed 230 mm.

7.1.4. On sailing craft installation of railing of a height not less than as indicated in the Table 4.7.1 is allowed when the rail of 900 mm height interferes with rigging operations.

Table 4.7.1

Design categories	Height of guard rail, mm	Remarks
R	600	For craft with $L_H \geq 8{,}0$ м [1] [2] [3] [4]
R100, R200 and **B**	600	For craft with $L_H \geq 8{,}0$ м [1] [2] [3] [4]
	450	For craft with $L_H < 8{,}0$ м [1] [3]
R0	450	[3]
C_1, C_2, C_3 and **D**	450	For decked craft (see types A, B and C in 1.2, Part IV «Stability, coefficient of buoyancy and freeboard») [3]
C_2, C_3 and **D**	[5]	For decked craft with $L_H < 6{,}0$ m

[1] At each craft side of the passage of sufficient width with antiskid surface and an extension to meet the requirements of 7.1.8 shall be available.

[2] At each craft side the rails running to cockpit shall meet the requirements of 7.3 and 7.4.

[3] Bow pulpit is recommended.

[4] Stern pulpit is recommended. When stern pulpit is not provided, guard rail shall be installed from the bow pulpit to the stern edge of the cockpit and around the cockpit back.

[5] Guard rail is not required when other safety precautions complying the craft type, such as handrails and canhooks at deckhouses.

7.1.5. On the craft in order to avoid vertical openings exceeding 500 mm with a cockpit open to stern installation of the appropriate safety guard rails shall be done.

7.1.6. On a sailing craft with a stay, the continuous or netted bow rail shall be installed in front of and around the stay at least at the same height as the adjacent railing.
Installation of netted guard-rail with mesh diagonal size above 250 mm shall not be done.

It is allowed to access a bowsprit or perform mooring operations an opening in the front part of railing. In this case safety rails capable to closing this opening and installed as per 7.1.5 shall be provided.

7.1.7. Ladders to internal craft spaces, companion hatchways and catwalks shall be installed with handrails.

7.1.8. A deck extension shall be provided on craft of **R**, **R100**, **R200** and **B** design categories in places of guard rail by the board of at least 25 mm in height in order to prevent sliding of a foot overboard.

7.1.9. On all craft rails and rail stanchions shall be securely fastened. They shall be fixed by through bolts, pasted-in or welded when they are fitted with sockets and pins. Fastenings of rail (rails) or rail stanchions shall keep them mechanically without rails. Rails and/or rail stanchions without sockets or pins shall be fixed by through bolts, pasted-in or welded.

7.1.10. Rails shall be made of multicore stainless steel rope of a diameter not less than specified in the Table 4.7.2

Table 4.7.2

Craft hull length, m	Minimum rope diameter, mm
$L_H \leq 8.0$	3.0
$8.0 < L_H \leq 13.0$	4.0
$4L_H > 13$	5.0

7.2. Guard rails

7.2.1. Rails and rail stanchions shall be securely fastened at craft deck. When rope rails are used, rope end restraint shall be strong, safe and make use of traditional patterns based on eye-splice and dead eye pleaching or using special steel snaps to be fi t on the rope with dead eye installed in the eye-splice.

7.2.2. For rail tension it is recommended to use special pulling turnbuckles made of stainless steel.

Rope turnbuckle from synthetic rope is permitted on all craft for rail tensioning, provided their overlap area does not exceed 1000 mm. All ropes, components and fastening points, as well as lanyards, shall form a continuous guard rail system, bursting strength of which at every point is at least equal to those of rope required for rails.

7.2.3. All fixing arrangements and components being a part of rope guard rail shall have bursting strength in 1.2 higher the strength of rail rope.

7.2.4. Rails shall be permanently supported by rail stanchions and shall not pass from outside the rail stanchions.

7.2.5. Rail stanchions and rails in rails fixing points shall be fitted with relevant arrangements or openings to ensure secure fastening of the rail.

7.2.6. Overall height of the rail or pulpit in the bow and stern of the sailing craft shall not be less than specified in the Table 4.7.3

Table 4.7.3: Rail height at the craft's ends

Length of the craft, m	Design categories	Minimum height, mm	
		With a single-row rail	With a double-row rail [1]
L_H < 8 м	R, R100 and R200	Not applicable	610/305
	B		560/280
	R0 and C_1	460	560/280
L_H ≥ 8 м	R	Not applicable	610/305
	R100 and R200		
	B		
	R0 and C_1		

[1] Height till the axis of the intermediate rail is fraction separated.

7.2.7. Axes of rail stanchion bases shall not be spaced inward the side edge of work deck apart 5 per cent of the maximum hull width or 150 mm, whatever is greater. Bases of rail stanchions shall not be located outside the work deck.

The rail stanchions are strength tested during manufacture. During bench tests in the direction perpendicular to the axis the stanchions shall withstand load of 560 N without destruction.

During the installation aboard the craft, the deviation of rail stanchion axis shall not exceed 10° from vertical in any point over 50 mm above the deck, when test load of 280 N is applied to the rail stanchion in horizontal direction perpendicularly to the rail.

7.2.8. Base of stanchion or rail shall consist of a bush or socket for the stanchion or the rail, but shall not include the base plate by means of which it is connected with deck or hull.

7.2.9. Bases of rail stanchions and pulpit shall have modulus of resistance at the base, cm^3, not less than:

$$W = (300a - 250)h/\sigma_{0,2}\ , \qquad (7.2.9)$$

Where *a* − interval between the stanchions, in m;

h − stanchion height, in m;

$\sigma_{0.2}$ − yield point of material, MPa.

Bases of rail stanchions and pulpit shall be fixed by through bolts or welded.

Inserted stanchions shall be fixed at the base.

7.2.10. When the craft is equipped by a bowsprit, the pulpit in way of bowsprit may only be fitted with rigid medium rail, however, in this case an arrangement shall be provided for installation of the upper rail to ensure the pulpit integrity on the level in stormy weather conditions.

7.2.11. When terminating the cable ends, the following shall be provided:

a) Insulation of rope yarns and wire strands in place of contact with the component part (dowel pin) it rubs against. This is ensured by a deadeye;
b) At least minimum rope bending radius allowable for particular diameter and material.

7.3. Storm safety rails

7.3.1 In the outfit of sailing craft **R**, **R100**, **R200** and **B** design categories storm safety rails shall be provided, as well as the appropriate places and attachments for their installation. It is recommended to install these rails on sailing craft of R0 and C1 design categories.

Storm safety rails are intended for movable fixing of crew and craft passengers' individual safety belts.

7.3.2 Storm safety rails are installed on craft's deck at each side in way of waterways or near the bulwarks from the inner side of rail stanchions.

7.3.2.1. Each storm safety rail shall be fitted with an individual fastener in bow (in stay area) and stern (in way of stern rail stanchions above cockpit) parts of the craft.

7.3.2.2. In ways of exits from internal spaces to deck the storm safety rail shall be arranged so that a person has a possibility to clip to it before appearing on deck. A person shall be fastened to storm safety rail even during transverse movements on deck in ways of craft ends, as well in the middle part of the craft, when it is necessary to operate the rigging.

7.3.2.3. For storm safety rail the use shall be made of stainless steel rope of at least 8 mm in diameter and yield point of at least 220 MPa, or a synthetic one of equal strength.

7.3.2.4. Length of storm safety rail shall be selected in compliance with particular craft size and equipment installed but no less than those required for normal movement of people, fastened by safety lanyards to storm rails, on craft deck.

7.3.2.5. When the craft is fitted with a bow guard with an open head, storm safety rails shall be installed frontward to protect people working outside the pulpit guard, for instance at bow sprit.

7.4. Fastenings for safety belts

7.4.1 Effective means for fastening safety belt lanyards shall be provided on the open deck, including storm rails on the sides and ends of deckhouses.

7.4.2 Fastening points of safety belts shall be arranged regarding the probable necessity of work on and above the deck. In general, the following fastening points shall be provided:

a) At exits to the deck;
b) On cockpit sides.

7.4.3 When it is not otherwise specified, the rails (fixed or movable) shall be located on both sides of the craft to ensure moving of crew members along the upper deck in unfavorable weather conditions.

7.5. Bulwark

7.5.1 On craft of **R**, **R100**, **R200** and **B** design categories all around the main deck the bulwark of at least 900 mm from deck shall be installed. On craft of design categories **R0**, $\mathbf{C_1}$ and $\mathbf{C_2}$ the bulwark may be installed only in the bow part of the craft. On sailing craft of **B**, **C**, $\mathbf{C_1}$ and $\mathbf{C_2}$ design categories the bulwark may be omitted.

7.5.2 In order to ensure the required height, if, by chance, a lesser height of the bulwark is expected, the cap rail of the bulwark shall be fixed by guard rail to ensure. Bulwark shall be equipped with a continuous cap rail except the areas where mooring and towing arrangements are placed.

7.5.3 The effective measures shall be provided for drainage (freeing ports and scuppers), when water is collected at bulwark on open decks. Total area of freeing ports and scupper at one side shall confirm effective drainage of the bulk of water from the deck at zero list during maximum 15 s.

7.5.4 Bulwark, nevertheless, the place of installation at main deck shall not be spaced at the value of 5 per cent of the maximum craft's hull width from sheer strake or 150 mm, whatever is the greater.

7.5.5 In is essential that the Bulwark strength shall deal with the requirements of Part II "Hull".

7.6. Rails of sailing craft

7.6.1 General.

A term "guard-rail" may be used rather than a term "rail" or "railing" for the purpose of this Chapter.

Any deviations of deck guardrail height, guardrail intervals, guardrail fixing are subject to special consideration of the Register for multihull craft.

7.6.2 Permanent railing.

7.6.2.1. Installation of the permanent bow railing (onward forestay) and stern railing (unless the rails are installed as an equal alternative to stern railing) are done on single-hull craft of the **R**, **R100**, **R200** and **B**, **R0** and $\mathbf{C_1}$ design categories.

Bow rail may be positioned to the stern from forestay, for craft up to 8,5 m in length, on condition that upper forward strap of the rail is within 405 mm from the forestay.

7.6.2.2. Irrespective of the design category, main hull of trimaran shall be fixed with bow railing. On each side this railing shall be joined with upper and lower rails surrounding the main hull and supporting by stanchions. Outside the main hull where the nets or transverse wings are placed, Rails may be discontinued.

7.6.2.3. Irrespective of the design category, Catamaran shall be fixed with bow and/or stern railing which end the rails.

7.6.2.4. In onboard all craft it is required that the height of upper hand-rails of rails above the working deck shall not be lower than upper rails. The height at the front part of cockpit which shall be mainly similar as the height of the upper rail.

7.6.3 Rails.

7.6.3.1. It is allowed not to fix rails to bow railing when they are fixed to or passing through sufficiently braced stanchions installed inside bow railing and overlapped by bow railing so that clearance between the upper rail and bow rail does not exceed 150 mm.

It is recommended for craft with hull length of 5.5 m and less, guard rail and stern railing; however, bow railing is mandatory.

7.6.3.2. The rails, on all craft, shall be fixed with enduring supporting arrangements and shall not pass through the outer side of rail stanchions.

7.6.3.3. The rails shall be sufficiently tensioned on all craft. The rail shall not be deflected for more than 50 mm when a deflecting force 50N is applied to a rail between the stanchions.

7.6.4 Supporting backstays and ends on monohull craft.

The bases of which are located within working deck, rail ends and supporting backstays may be secured on the hull to the aft from working deck, on condition that closed guard rail are reinforced by stanchions and railing.

7.6.5 Nets-trampolines, rails, stanchions and railings of all multihull craft

7.6.5.1. It is essential to check that the Nets-trampolines shall be made of firmly interlaced watertight cloth or woven nets with a mesh not exceeding 50,8 mm (2 inches). In order to avoid wear their fixing points on the yacht structure shall be located in a proper manner. Connections between trampolines or nets or craft shall protect sticking of a man foot in them.

7.6.5.2. At longitudinal and transverse lines at regular intervals, net-trampoline shall be inflexibly secured and tightly sewed to boltrope. Lines which are used for net tensioning shall be tensioned separately or no more than four fixing points may be connected to one connecting line.

7.6.5.3. In normal conditions of navigation and in case of craft capsizing, net-trampoline shall bear total weight of the crew both.

7.6.5.4. It is needed that the trimaran with two transverse beams shall be equipped with a net covering the space between the main hull and each auxiliary side/float hulls.

On trimaran the net in the bow part of each side is fixed in the fixing point of bow railing of main hull and a middle part of a bow transverse beam. In the aft part from each side it is recommended to fix the net in the vicinity of cockpit or control station, whichever is located farther to aft and a crossing point of the aft transverse beam and auxiliary float hull.

7.6.5.5. Provision of additional rail shall be made from the top of the railing till the middle of bow transverse beam or to the outside of it when net extends into the railing base.

7.6.5.6. Aboard trimarans fitted with one transverse beam between the main hull and each side hull/float hull the net shall be located at least between two straight lines going from crossing point of transverse beam with the float hull, one up to stern end of bow rail of the main hull in the bow part of the yacht, the other one up to rightmost stern part of cockpit or control station (depending on what is located farther to stern) in the stern part of the yacht.

7.6.5.7. Where the control station is fixed on the float hull, aboard trimarans, even if it is used not often (for example, as an emergency control station) irrespective of the availability of cockpit, such float hulls shall be equipped with rails running till the control station and securing it through 3m radius arc and with a center in the control station. The dimensions shall be taken with the rails tensioned, when assessing a distance between rails.

7.6.5.8. Total net surface of catamarans shall be terminated:

1. on each side − by hulls;
2. in the longitudinal direction − by a section going through the stay base and a section going through the backmost point of boom when the boom is in the center plane. Catamaran with a central cabin not touching water surface may meet the requirements for the trimaran.

7.6.5.9. Each catamaran hull shall be equipped with rails running from bow to transom.

It is essential that the Catamarans not fixed with bow or stern transverse beam shall be equipped with transverse rails on net ends fore and aft. These rails shall be joined to bow and aft handrails or stanchions. Strapping, bond or robe of at least 6 mm in diameter in a form of zigzag shall connect rails and net.

SECTION 8 MAIN, ESCAPE AND EMERGENCY EXITS

Contents

8.1. General

8.1.1. At least two exits: main and emergency irrespectively of the craft design category shall be provided to each hull of the craft with living accommodation.

A hatch for entrance into the hull and exit from it in the case of capsize shall be provided to each hull of a multihull of **R**, **R100**, **R200** and **B**, **R0**, **C_1** and **C_2** design categories having living accommodation.

Two exits: main and emergency shall be provided to each living accommodation, which is used either for sleeping / resting or is exposed to the increased risk of fire

One main exit leading to an open air may be allowed only in exceptional cases, when the general safety of the ship is negatively influenced by the installation of a second exit. The length of such accommodation shall not exceed 8 m.

8.1.2. Exits shall be permanently accessible and their closing appliances – without using a special instrument, shall be permanently operational to be opened from the inside and outside.

8.1.3. A ladder, steps or other permanently fixed footholds with the distance between the upper foothold and the centre of an opening not above 1.2 m shall be equipped to the exit located in an upper part of the accommodation.

8.1.4. All exits other than the main shall be appropriately marked and labeled “Exit” or “Emergency Exit”.

8.1.5. When the only exit from the accommodation specified in 8.1.1 is provided, effective smoke detectors and an appropriate system warning of fire, which may cut off a way to the only exit from the accommodation for people being there, shall be obligatory installed on the ship.

8.1.6. At least two exits (main and emergency) from the craft hull irrespectively of the craft design category shall be provided to all monohull sailing craft of 8.5m in length and above. One exit shall be located before the fore mast, except for the case, when structural features do not allow to install it.

8.1.7. Each escape hatch shall be capable of being opened both from the outside and inside.

8.1.8. In case of craft capsize an escape and rescue hatch shall not be under water.

8.1.9. Minimum dimensions of exits.

Hatches shall have the following minimum clear characteristics:

Circular shape – minimum clear diameter of 450 mm;

Any other shape – minimum dimension of 380 mm and minimum area 0.18 m^2 of coaming clearance and hatch coaming clearance shall have such configuration so as to allow for a 380 mm diameter circle to be inscribed. Some examples are shown in Fig. 4.8.1.

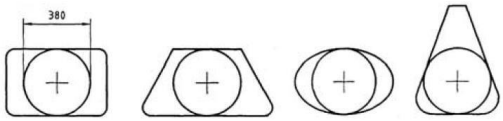

Figure 4.8.1

8.1.10. Structure of closing appliances.

8.1.10.1. When closed but not battened down then escape hatch covers shall be capable of being easily opened from the inside and outside. Hinge or hinges of a cover of the escape hatch, which is opened from the inside, shall be such as to prevent tearing out of the hatch cover by a wave slap, when the hatch is partly or completely open.

8.1.10.2. Movable shields or storm boards shall be installed and fixed in such a way so as to exclude their displacement at any list (heel) or trim of the ship when, they are used to close a vertical opening.

8.2. Escape routes on craft 15 m in length and under

8.2.1. The distance to the nearest exit to the open air shall not exceed 5.0 m. The distance to the nearest exit shall not exceed 4.0 m where the exit route passes beside an engine space.

In the horizontal plane, the distance shall be measured as the shortest distance between the centre of the exit and the farthest point where a person can stand at the midpoint of the height (minimum height 1.6 m).

8.2.2. Where only one escape route is provided, this shall not pass directly over a cooker or heating appliance.

8.2.3. An alternative exit shall be provided where separation of living or sleeping accommodation from the nearest exit is done by a partition with a door or in other similar way and leads directly past a cooker or engine space.

8.3. Escape routes on craft above 15 m in length

8.3.1. General requirements.

8.3.1.1. Where there are two escape routes only one may pass through, over and beside an engine space.

8.3.1.2. Where the distance between a cooking or open-flame heating-appliance burner and the nearest side of an escape route is less than 750 mm, a second escape route shall be provided.

8.3.1.3. In an enclosed galley, the second escape route is not required where its dead end beyond the cooker is less than 2,0 m.

8.3.1.4. No escape route shall pass directly over a cooking or open-flame heating appliance.

8.3.2. Open-accommodation arrangement.

Application of the following shall be done where living or sleeping accommodation is not separated from the nearest exit, i.e. people can move around without passing through any door, excluding toilet or shower compartment doors:

.1 The distance to the nearest exit shall not exceed L_H /3, m;

.2 the distance shall be measured in the horizontal plane as the shortest distance between the nearest part of the exit and the farthest point where a person can stand at the midpoint of the height (minimum height 1,6 m).

8.3.3. Enclosed accommodation arrangement.

In order to meet the following conditions, arrangement of the escape routes and exits from accommodation areas shall be done, where living or sleeping accommodation is separated from the nearest main exit by bulkheads and doors.

8.3.3.1. Unless it is a single cabin or compartment that is intended to accommodate no more than four persons and the exit leads directly to the open air without passing through or over engine spaces or over cooking appliances, each accommodation section shall have more than one escape route leading finally to the open air.

8.3.3.2. Escape routes may form shared escape ways for up to 2.0 m that is measured to a two-way escape route from the door or entrance for individual cabins intended to accommodate no more than four persons, and not containing cooking or open-flame heating devices.

8.3.3.3. Shower and toilet compartments are regarded as part of the compartment or passageway that gives access to their doors and therefore does not require alternative escape routes.

8.3.3.4. As far as practicable, with multilevel arrangements, the exits shall lead to a different accommodation section or compartment.

SECTION 9 HATCHES, DOORS, SIDE SCUTTLES, WINDOWS, COVERS AND MANHOLES

Contents

9.1. Definitions and explanations

9.1.1. For the purpose of the present Section, the following definitions and explanations have been adopted:

Water tightness is the capacity of an appliance or a device in order to prevent ingress of water inside the craft.

Entry door is a door or another closing appliance that is closing the passage to crew spaces.

Side scuttle of non-opening type is a side scuttle that is provided with a fixed glass of non-opening type.

A device that is used to cover openings in hull or superstructure, including windows, side scuttles, deadlights, hatch covers, doors, sliding appliances, emergency hatches is known as Closing appliance.

Escape hatch is an appliance that is intended to provide an exit and designated means of saving life in the event of accident or inversion.

Window is a glazed appliance. For small window, generally the term “port light” is used.

Flush deck scuttle is a side scuttle of nonopening type that is installed on the exposed deck plating so as to ensure access of light into the space.

Deck hatch is a device that is fitted on decks and inclined sides of superstructures and deckhouses.

Appliance location area is one of the outer hull areas as stated below and shown on Fig. 4.9.1

Area I is a part of hull sides that is situated below the waterline, including inner sides of multihulls and transom.

Area II (II a o r II b) are exposed parts of the deck, as well as the sides of superstructures and deckhouses of the first tier that is situated forward of 0.25 of the craft’s length L from the forward perpendicular;

Hull side situated above the waterline, including the inner sides of multihulls and transom;

Exposed parts of the deck, superstructures and deckhouses of the first tier, cockpit soles, as well as outer sides of the superstructure and deckhouse of the first tier at an inclination of less than 25° to the horizon in a longitudinal direction, and at an inclination of less than 25° to the horizon in the transversal direction respectively for multihulls and motor sailors.

Area III are the outer sides of superstructures and deckhouses of the first tier not belonging to area I or II.

Area IV are the decks and outer sides of superstructures and deckhouses of the second tier and upper. Parts of

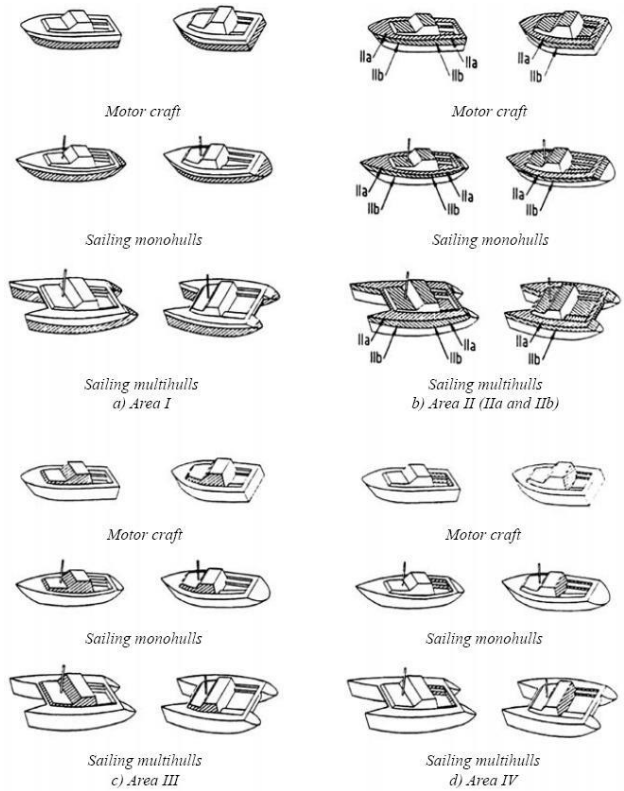

Fig. 4.9.1: Typical appliance location areas on small craft

Areas are schematically shown as hatched spots.

area III protected from the direct impact of waves. Cockpit sides, rear faces of superstructures and deckhouses of all tiers.

An appliance that can slide in a rabbet or a frame is a Sliding appliance.

A plate that is mechanically connected to a frame that slides in a rabbet is a framed plate sliding appliance.

A plate without frame that slides in a rabbet or a frame is frameless plate sliding appliance.

A side scuttle with an opening glass ensuring access of air to spaces is a pivoted side scuttle.

Degree of watertightness is the capacity of an appliance or fitting to resist ingress of water according to the following conditions of exposure to water:

Degree 1 – tightness is ensured under the water head in the submerged condition.

In order to prevent ingress of liquid inside the craft when they are subjected to the specified pressure for the unlimited time, structural components or closing appliances of hull openings, if they are fitted, shall be deemed watertight.

Degree 2 – tightness under the effect of waves (temporary submersion, actions of waves and other possible effects) is ensured.

In order to prevent any ingress of water inside the craft when they are subjected to a pressure corresponding to a head of water of 10 m for one minute, or a jet of water at a pressure of at least 100 kPa for 10min applied over the entire surface and structural components or closing appliances from a distance of not more than 1.5 m, structural components or closing appliances in the underwater hull, if they are fitted, shall be deemed watertight.

Degree 3 = Weathertightness is ensured.

In order to prevent any ingress of water inside the craft when they are subjected to a jet of water at a pressure of at least 100 kPa applied over the entire surface and structural components or closing appliances from a distance of not more than 3.0m Structural components or closing appliances of the underwater hull, if they are fitted shall be deemed watertight.

Degree 4 = spray tightness is ensured.

A closing appliance shall be deemed sprayproof, if under the effect of divergent jet of water at a pressure of at least 100 kPa applied over the entire surface and closing appliances from a distance of not more than 3.0m, it permits only a small quantity of water to enter the craft.

Dead light is a secondary watertight closure fitted to a window, a hatch or a door, and which may be fitted outside and inside the plate.

9.2. General

9.2.1. Watertightness.

9.2.1.1. In order to avoid flooding, all appliances shall be manufactured and fixed to meet the minimum degree of watertightness when closed.

9.2.1.2. Before installation on the craft, the appliance manufacturer shall test the degree of watertightness of the manufactured appliance.

9.2.1.3. In compliance with the requirements of 9.10, testing of the degree of watertightness of any appliance installed on the outside surface of the craft is to be done.

9.2.1.4. The degree of watertightness of any closing appliance installed on a non-outside surface of the craft should be tested for a chalky imprint on the seal.

9.2.2. Minimum degree of watertightness.

9.2.2.1. The required minimum degree of watertightness of a closing appliance depends on the area of its location onboard and area of navigation. The required minimum degree of watertightness is shown in Table 4.9.1.

Table 4.9.1: Minimum degree of watertightness

<table>
<tr><th rowspan="2">Type of craft</th><th rowspan="2">Appliance location area</th><th rowspan="2">Type of appliance</th><th colspan="4">Design category</th></tr>
<tr><th>R, R100, R200 and B</th><th>R0 and C_1</th><th>C_2 and C_3</th><th>D</th></tr>
<tr><td rowspan="4">All craft</td><td>Area I</td><td>Any</td><td>1</td><td>1</td><td>1</td><td>1</td></tr>
<tr><td rowspan="2">Area II</td><td>Any</td><td rowspan="3">2</td><td>2</td><td>3</td><td rowspan="7">4</td></tr>
<tr><td>Sliding companionway hatch</td><td>3</td><td rowspan="6">4</td></tr>
<tr><td>Area III</td><td>Any</td><td>2</td></tr>
<tr><td>Sailing monohulls</td><td rowspan="3">Area IV</td><td>Any</td><td rowspan="3">3</td><td>3</td></tr>
<tr><td>Motor craft</td><td rowspan="2">Any</td><td rowspan="2">4</td></tr>
<tr><td>All multihulls</td></tr>
<tr><td colspan="7">Note: The above degrees of watertightness relate not only to closing appliances. The degree of watertightness of any device, which is not built into the appliance, for example a ventilation system, shall comply with the requirements of the present Rules. Watertightness of closing appliances and component parts fitted in cockpits shall comply with the present requirements.</td></tr>
</table>

9.2.2.2. The requirements of 9.10 and Table 4.9.1 shall be met by the required degree of watertightness of any appliance, after installation on the craft.

The method required in 9.10 shall be used, if before installation on the craft, the shipyard tests closing appliances and component parts.

9.2.3. Additional requirements related to watertightness.

9.2.3.1. In Area I, sliding appliances shall not be used.

9.2.3.2. Hatches that are fitted on the decks of trimaran outrigger hulls shall not be sliding appliances.

9.2.4. General requirements to openings and their closing appliances in hull, upper deck, superstructures and deckhouses.

The requirements that are specified in Table 4.9.2 and 4.9.3 are to be met during the installation of appliances:

Table 4.9.2

Appliance	Design category	
	R, R100, R200 and **B**	**R0, C_1, C_2** and **C_3**
Deck hatch covers	[1] [3]	[2] [3]
Cockpit covers	[1]	[2] [3]
Sliding covers	[2] [3] [9]	[2] [3]
Access to cabin	[2] [5]	[2] [4]
Ventilation ducts for accommodation spaces	[2] [7]	[2] [3]
Ventilation ducts for engine room	[2] [3] [6] [7]	[2] [3] [6]
All pipes	[2] [3] [6]	[2] [3] [6]
Keel box	[1]	[2] [8]
Chain locker pipe	[2]	[2]

[1] − Closing appliance ensuring watertightness degree 2.

[2] − Sprayproof closing appliance.

[3] − For craft using no sails for propulsion:

all closing appliances (openings) submerged to the water at an inclination of 0 to 50°, as appropriate, shall be weathertight so as to ensure stability limit of up to 50°;

craft with the stability limit less than 50° shall not be exempted from this requirement.

For craft which may use sails for propulsion:

all closing appliances (openings) submerged to the water at an inclination of 0 to 90°, as appropriate, shall be weathertight so as to ensure stability limit of up to 90°;

craft with the stability limit less than 90° shall not be exempted from this requirement.

[4] − The coaming shall be at least 50mm high. Removable coamings on craft of design category C2 shall meet the requirement [5].

[5] − The coamings of doors to underdeck spaces shall have a height not less than the values specified in Table 4.9.3.

[6] − May be located only above the main deck in enclosed spaces so as to ensure engine operability as long as possible, even in foul weather.

[7] − Possibility should be provided to arrange weathertight closure (i.e. tarpaulin cover) in the event of a stormy weather.

[8] − Safety distance from the effective waterline to the lowest point, where watertightness is not ensured, shall be at least 100 mm. The parts of keel box above this level may be sprayproof.

[9] − May be located on superstructure or deckhouse deck only. Hatches with sliding covers in the bow of the craft shall have coaming height of at least 150mm above the superstructure or deckhouse deck.

Table 4.9.3

Location	Height of coamings, in mm	
	Motor craft	Sailing craft
In lateral and rear sides accessible from the main deck	150	150
In lateral and rear sides accessible from the cockpit	380 from the cockpit sole	460 form the cockpit sole
Anywhere, if this access leads directly to under deck spaces	460	460
Note: Removable coamings of doorways shall allow fitting the doors in places of installation		

9.2.5. Additional requirements to appliances located in Area II.

9.2.5.1. At a distance of not less than that specified in 6.4.2 − 6.4.5, Part IV “Stability, Buoyancy and Freeboard” the lower edge of any opening appliance shall be placed above the waterline.

The smallest unsupported dimension of appliance shall not exceed 300mm.

Applications of the above requirements are not done to escape hatches of sailing craft.

9.2.5.2. With the exception of deck covers and escape hatches of sailing craft, all opening appliances shall open inwards.

9.2.5.3. On craft of design categories **R**, **R100**, **R200** and **B**, **R0** or $\mathbf{C_1}$ no part of the plate framing shall extend outside the local vertical tangent to the hull, deck, rubbing strake, fixed fender, or of a built-in fairing which is an integral part of the hull.

9.3. Weathertightness

9.3.1. General requirements to hatch covers.

Hatches that lead to the inside spaces of the craft shall be fitted with sprayproof covers. The hatch covers may pivot on hinges, sliders or rollers, though, in any case they shall be permanently secured to the craft and provided with essential locking devices, which maintain them in a closed position at potential heel and trim in the prescribed areas of navigation. The hatches with pivoted covers that is located forward of the foremast shall have hinges fitted only on the fore edge of the hatch.

9.3.2. Hatches open on the way.

Generally all access hatches shall be closed when at sea. Though, the hatch, which can be open at sea for a long time, shall meet the following requirements:

a) Have minimum possible dimensions (area of vertical opening shall not exceed 0.4 m^2 in the plan);

b) Be located on cl, or as close to cl as possible;

c) Be installed on craft of design categories **R**, **R100**, **R200** and **B**, **R0** or $\mathbf{C_1}$ so as to be opened at a height of at least 300mm above the upper deck adjacent to the opening side.

9.3.3. Rabbet depth.

In order to prevent any disengagement of the plate, the depth of the rabbet shall be sufficient. This depth shall be at least 12 mm in case for unframed plates made of plastics or materials with similar modulus of elasticity.

9.3.4. Stops.

In order to prevent any disengagement of the sliding part of the frame, the sliding appliance shall be fitted with stops at each end of its stroke.

9.3.5. Locking system (locking devices).

Any appliance shall have a locking device which maintains it in a closed position, operable at least from inside.

In case of doors, this system shall be operable from both sides.

In case of craft of design categories **R, R100, R200** and **B, R0** or **C1**, if the companionway door is used together with a companionway hatch, the locking device need only be efficient when both the door and the hatch are closed together. In this case, the locking device may only act between the upper panel of the washboard and the hatch if the companionway door is made with washboards.

9.4. External doors

9.4.1. Installation of all external doors may be done only above the freeboard deck or cockpit sole.

Watertightness of the external doors shall be 2, 3 or 4 according to the place of their installation.

9.4.2. Bow doors.

It shall be permitted for the arrangement of bow doors only if the water, which is occasionally passed through them, shall in no case penetrate inside the spaces below the freeboard.

9.4.3. Side and stern doors.

9.4.3.1. On craft of design categories **R**, **R100** and **R200,** the coamings of side and stern doors shall be at least 300 mm high. This height for craft of design categories **B**,**R0** or $\mathbf{C_1}$ may be reduced to 230 mm.

9.4.3.2. The coamings of hatchways, companionways and access openings to superstructures and deckhouses, on craft of design categories $\mathbf{C_2}$ or $\mathbf{C_3}$**,** shall be not less than 150 mm.

9.4.3.3. The coamings of hatchways, companionways and access openings to superstructures and deckhouses, on craft of design category **D,** shall be not less than 50 mm.

9.4.3.4. The doors shall be hinged inside.

In order to ensure opening, closing or securing of doors having watertightness degree 2 or 3 provision shall be made for quick-acting appliances, which from both sides may be operated.

All external doors shall open outwards. In each particular case, the Register shall specially consider installation of the doors opening inside the superstructures or deckhouse.

9.4.3.5. On each edge of the door having watertightness degree 2 or 3, the number of securing devices shall be not less than two; in the vicinity of each door corner a securing device shall be provided. The distance between securing devices shall not exceed 1.5 m.

9.4.4. External doors which are having watertightness degree 2 or 3 shall be made of metal.

External doors which are having watertightness degree 4 may be made of wood or other non-metal materials.

9.4.5. The freeboard superstructure doors or deckhouse doors which open the direct access to engine room or underdeck spaces shall be watertight, and the height of their coamings shall be not less than 460 mm above the deck.

9.4.6. Doors made with removable sections: washboards.

On craft of design categories **C_1, C_2, C_3** or **D,** installation of doors made with removable sections, usually called “washboards” may be done, and shall be:

.1. Fitted with a device to keep them in position, when in use, and to be at least operable from inside;

.2. Stored inside the craft in the vicinity of the door opening;

.3. Easily reached without use of tools;

.4. Removable sections of washboards, when not in use, shall have places of permanent storage and securing.

9.5. Side scuttles

9.5.1. The number of side scuttles in the shell plating below the freeboard deck shall be reduced to a minimum consistent with the structure and operational conditions of the craft, in order to exclude their damage during possible mooring alongside other craft.

In way of engine room, no side scuttles shall be allowed in shell plating.

9.5.2. In the shell plating below the freeboard deck, side scuttles shall be of non-opening type and round shaped.

In the engine room skylight, side scuttles shall be of non-opening type.

If permission was given for installing pivoted side scuttles in the above area, the requirements of 6.4.2 and 6.4.3 shall be met, as well as the requirements of 2.6, Part IV "Stability, Buoyancy and Freeboard".

9.5.3. Side scuttles may be round or rectangular. In any case the side scuttles shall have dimensions relevant to the design category and ensure watertightness.

9.5.4. In case of craft of design categories **R**, **R100**, **R200** side scuttles shall be located so as to prevent their lower edges from being below the line parallel to the freeboard deck and having its lowest point at a distance of 500mm above the summer load line.

For craft of design categories B or C reduction of this distance may be done to 300mm, while for craft of design categories $\mathbf{C_1}$, $\mathbf{C_2}$, $\mathbf{C_3}$ or **D** − to 150 mm.

9.5.5. The side scuttles in shell plating below the freeboard deck and in fore sides of enclosed superstructures and deckhouses of the 1st tier, and also in fore sides of enclosed superstructures and deckhouses of the 2nd tier situated forward of 0.25 of the craft length L_H from the forward perpendicular shall be:

Of a heavy type and fitted with efficient deadlights hinged inside − on craft of design categories **R**, **R100**, **R200**;

Of normal type and fitted with efficient deadlights hinged inside − on craft of design categories **B**, **R0** or $\mathbf{C_1}$;

Of light type and fitted with no deadlights − on craft of design categories $\mathbf{C_2}$, $\mathbf{C_3}$ or **D**, though they shall be watertight and of non-opening type, i.e. Non-pivoted

The windows of superstructures, deckhouses and companionways of craft of design categories $\mathbf{C_1}$, $\mathbf{C_2}$, **C3** or **D** located below the freeboard deck, may only be weather tight and pivoted.

9.5.6. Except those that are specified in 9.5.5, the side scuttles in enclosed superstructures and deckhouses of the 1st tier, shall be:

Of normal type and fitted with efficient deadlights hinged inside − on craft of design categories **R, R100, R200**;

Of light type and fitted with efficient deadlights hinged inside − on craft of design categories **B**, **R0** or $\mathbf{C_1}$

9.5.7. Except those that are specified in 9.5.5, side scuttles in enclosed superstructures and deckhouses of the 2nd tier shall be as required in 9.5.6, provided that these side scuttles give a direct access to an open stairway leading to spaces that are situated below.

In cabins and similar spaces of enclosed superstructures and deckhouses of the 2nd tier it is permitted that the side scuttles or windows could be fitted without deadlights instead of side scuttles that are specified in 9.5.6.

9.5.8. The side scuttles and windows of superstructures, deckhouses and companionways on craft of design categories **C_1**, **C_2**, **C_3** or **D** located below the freeboard deck may only be weathertight and pivoted, though the glass should be safe with the thickness of at least 6 mm.

9.5.9. The side scuttles that are installed on the craft hull below the upper deck shall be watertight, and their strength shall be not less than that of the hull structure in places of their installation.

9.5.10. If the strength of glass or the means of its attachment to the frame is not equivalent to that required for structural components on which they are fitted, then permissions are not given for installing side scuttles in the main hull of multihulls below the upper deck.

9.5.11. On craft of design categories **R**, **R100**, **R200**, **B**, **R0** or **C_1** provision shall be made for caps (amounting to 50 percent of the number of craft windows of each size), which may be securely attached to the window place in case of glass fracture.

9.5.12. Glass of side scuttles and windows.

9.5.12.1. Generally, glass shall be made of tempered or annealed safety glass (“ESG”). Use of laminated glass (“MSG”), plates of acrylic and polycarbonate or other equivalent material is permitted.

In case of craft of design categories **R**, **R100**, **R200**, **B**, **R0** or **C_1** plastic window glasses shall be made of material resistant to ultraviolet rays (UV).

9.5.12.2. Window glasses of silicate (“ESG”, “MSG») shall have metal frames tightened to the craft hull. The glass bearing area as against the frame shall be at least 6.0 mm wide.

9.5.12.3. By means of frames, windows of acrylic or polycarbonate plates shall be attached. Provided that bolt fixture will be capable to withstand the emerging stresses and ensures long-term watertightness, they also may be attached directly to the shell plating or outer side. The width of the glass bearing area shall be 3 per cent of the shortest side of the glass, but not less than 20 mm.

Other structural solutions ensuring equal safety are permitted. Confirmation of the strength shall be done with the help of tests and/or calculation.

9.5.12.4. In case of craft of design categories **C_2**, **C_3** or **D,** only if the shortest side of the window does not exceed 300 mm and circle radius is at least 50 mm then Sections with rubbers may be used.

9.5.12.5. With the help of the following formula, the thicknesses of the window glass shall be determined

$$t = n.\sqrt{(F.F_b)/y}\ , \qquad (9.5.12.5)$$

Where F = surface area of the glass, in m^2;

F_b = freeboard, in m;

y = height of the window center, in m, above the surface of effective waterline corresponding to F_b;

n = coefficient adopted in compliance with Table 4.9.2

Table 4.9.2: Values of coefficient *n*

Type of glass and its location	**Material**	***n***		**t_{min}, mm**
		Design categories		
		R, R100, R200 and B	**R0, C_1, C_2, C3 and D**	
Windows in hull and in fore sides of superstructures	Annealed safety glass (ESG)	12.0	11.0	6
	Polycarbonate (PC)	15.6	14.0	5
	Acrylic laminated glass (MSG)	18.0	16.0	5
Windows in rear sides or in recesses of	Annealed safety glass (ESG)	9.6	8.6	4

superstructure sides	Polycarbonate	12.5	11.0	5
	Acrylic laminated glass (MSG)	14.4	13.0	5

Depending on the area of location onboard the minimum glass thickness shall not be less than that given in Table 4.9.3.

9.5.12.6. Only acrylic or polycarbonate plates may be used for skylight scuttles and deck hatch covers. The thickness of glasses made of these materials shall be 25 per cent more than that of the hull scuttles or fore side scuttles according to 9.5.12.5, but not less than 7.0 mm.

Table 4.9.3: Minimum glass thickness

Material	**Acronym**	**Safety factor, γ**	**Plate thickness t_{min}, *in mm***			
			Design categories			
			Any		***)**	****)**
			Area of installation onboard			
			Area I	**Area II**	**Areas III and IV**	
Poly(methyl)methacrylate	PMMA	3.5	6 + 0.1 (L_H – 4)	6	5	4
Polycarbonate	PC	3.5	6 + 0.1 (L_H – 4)	6	5	4
Monolithic tempered glass [1]	TG	4.0	5 + 0.1 (L_H – 4)	4	4	3
Laminated glass [1]	LG	4.0	5 + 0.1 (L_H – 4)	4	4	3

*) – **R**, **R100**, **R200** and **B**.

) – **C, **C_1**, **C_2**, **C_3** or **D**.

[1] Glass is only allowed in Area I if it is highly resistant to impact, or if equipped with a deadlight.

9.6. Deadlights

9.6.1. The requirements of Chapter 4 “Equipment, Arrangements and Outfit” of Rules for the Classification and Construction of Sea-Going Ships shall be met by Deadlights. Deadlights of windows fitted in area I shall be permanently attached to the appliance, its framing, or the craft structure, and shall be operative even in the case of rupture of the opening part of the window.

9.7. Companion hatches, skylights and flush deck scuttles

9.7.1. Protection of outward deck openings that are designed for installation of companion hatches to underdeck spaces shall be done with covers that are permanently attached to the coamings.

Covers which are having watertightness degree 2 or 3 shall be made of metal.

Covers which are having watertightness degree 4 may be made of wood or other non-metals.

The thickness of their plate shall be 0.01 times the spacing of stiffeners, but not less than 2mm where the covers are made of metal.

9.7.2. Skylight shall be effectively sprayproof and shall be located in the craft CL or as close to the CL as possible, if not designed as means of evacuation from underdeck compartment.

If an opening-type skylight is fitted, it shall be provided with a reliable device capable of maintaining it in a closed position.

The skylight which is serving as means of evacuation shall be capable of being opened from any side (from the deck and from the space).

If the strength of glass or of its attachment to the frame is not equivalent to that required for the structural components, to which they are attached, provision shall be made for a removable cap, which may be securely attached to this place in case of the glass rupture.

The glass thickness shall be equal to that required in 9.5.12 with due consideration of loads from the deck cargo.

9.7.3. Flush deck scuttles shall be of non-opening type. In Areas I and II, Flush deck scuttles that are fitted shall be provided with deadlights hinged or attached by other method (for example, by means of a chain) and capable of being easily and efficiently closed and secured.

9.7.4. With the glass being at least 15 mm thick, the largest dimension of the flush deck scuttles shall not be over 200 mm. Moreover, the glass shall be tempered. With the help of frames, the flush deck scuttles shall be attached to the metal deck plating.

9.7.5. The strength of glass or of its attachment to the frame shall be equal to that of structural component in which it is fitted.

9.7.6. When secured, the deadlights of the flush deck scuttles shall be weathertight. With the help of a rubber or other suitable gasket, the tightness shall be ensured.

For the same purpose, along their contour the glasses of the flush deck scuttles shall be provided with a gasket made of rubber or other suitable material.

9.8. Requirements to materials

9.8.1. Plate materials.

9.8.1.1. General requirements.

Transparent glazing material, such as poly (methyl) methacrylate (PMMA), polycarbonate (PC), tempered glass, chemically reinforced glass or laminated glass shall be used to make appliance plates, refer to Table 4.9.4; or

A non-transparent plate material, such as plywood (PW), glass-fiber reinforced thermosetting plastic (GRP), aluminum alloy, steel, etc.; or

Any other material of strength and stiffness equivalent to those cited above

9.8.1.2. Mechanical properties of materials are given in Table 4.9.5.

9.8.2. Acrylic sheet materials.

Poly (methyl) methacrylate (PMMA) made with a technique other than the casting procedure shall have mechanical properties and resistance to ageing at least equal to those of cast PMMA.

9.8.3. Glass.

9.8.3.1. Restrictions to usage.

In case of sailing craft of all design categories and on motor craft of design categories **R**, **R100**, **R200** and **B**, glass shall not be used in Area I unless the plate is made of high-impact resistance glass, or if the appliance is equipped with a deadlight.

In Area II on motor craft, the usage of monolithic or laminated glass is accepted without restriction.

On sailing craft, neither monolithic nor laminated glass shall be used forward of the foremast, unless the plate is made of high-impact-resistance glass, or if the appliance is equipped with a deadlight. Properties of high-impact resistance are given in Table 4.9.5.

The restriction need not be considered if the plate is protected against shocks by an approved device, for example, outside grid network, protection bars.

9.8.3.2. Monolithic glass.

Monolithic glass shall only be made of tempered glass or chemically reinforced glass.

9.8.3.3. Laminated glass.

The glass plies used in laminated glass can be made of any type of glass.

Table 4.9.4: High-impact-resistance glass types

Glass type	Requirements
Laminated glass (faces AG, TG or CG)	Minimum thickness of faces 4 mm, minimum interlayer thickness 2,3 mm.
Bullet-resistant glass	Class FB2 to FB7 tested in accordance with EN 1063
Impact-resistant glass	Class 4 tested in accordance with EN 356
N o t e : AG = annealed glass; TG = tempered glass; CG = chemically reinforced glass. Other glass types can be accepted if a 400 mm × 400 mm flat plate can bear an impact energy of 300 J yielded by the fall of a hard object (steel ball) and have a degree of watertightness 1, 2 or 3, when tested.	

Table 4.9.5: Average mechanical properties of typical materials

Material	Abbreviation	Ultimate flexural strength σ_u (MPa)	Modulus of elasticity E (MPa)
P o l y (methyl) methacrylate	PMMA	110	3000
Polycarbonate	PC	90	2400
Tempered glass	TG	200	72600

Chemically reinforced glass	CG	300*	72600
Annealed glass	AG	40	72600

* This value corresponds to a case depth (chemical reinforcement depth) of 30 μm.

AG = annealed glass;

TG = tempered glass;

CG = chemically reinforced glass.

9.8.4. Specific requirements.

9.8.4.1. Type of end connection.

The Rules do not prescribe any specific types of end connection, though; it is suggested to use type connections of ISO 12216:2002, namely:

a. Plates that are fastened without glue or gasket to the frame rabbet or to the craft face by elastomer joint are simply supported plates;

b. Plates that are fastened to the frame rabbet on elastomer or fastened to the edge of side opening by elastomer joint like a car windscreen are flexibly connected plates;

c. Plates that are fastened directly to the craft side or a frame exclusively by means of glue, glue and bolts (screws) or by means of glue, bolts and a counter frame are semi-fixed plates. With the help of one of the following means, this type of end connection can be achieved:

Connected with a counter-frame: The edge fixity is achieved by pinching the plate at its periphery between the craft shell or a frame and a counter frame. The counter frame shall be mechanically fastened and/or glued to the structure of the craft;

Connected by gluing: The edge fixity is achieved by gluing the plate at its periphery to the craft shell, to the structure of the craft or to a frame. This gluing can either be in a rabbet or a face, edge gluing or any combination of these gluing methods.

Connected by direct fastening: The edge fixity is achieved by fastening the plate inside its periphery to the shell, the structure of the craft or to a frame by correctly spaced and sized mechanical fasteners. These

fasteners may be bolts, rivets, self-tapping screws or any adequate mechanical fasteners.

Note. Even with the best fastening system, full edge fixity of a non-stiffened plate at its periphery can never be achieved. Plates are therefore considered at best as semi-fixed.

9.8.4.2. Location on the craft.

9.8.4.2.1. Simply supported plates.

On craft of design categories **R**, **R100**, **R200** and **B** or **R0,** simply supported plates shall not be used in Area I and II. Provided that all the following requirements are met, on craft of other design categories and in other Areas, simply supported plates may be used:

The material used is PMMA or PC;

The plate thickness is equal to 1.3 times the one required by 9.5.12.5;

The fixing devices of the plate (hinged bolts, fixing knob, etc.) are not spaced more than 250 mm.

If the appliance is equipped with a deadlight then the above restrictions of use need not be considered.

9.8.4.2.2. Flexibly connected plates.

On motor craft of design categories $\mathbf{C_1}$, $\mathbf{C_2}$ or $\mathbf{C_3}$ in Areas III and IV flexibly connected plates may only be used.

9.8.4.2.3. Semi-fixed plates.

In craft of all design categories, semi-fixed plates made of materials other than glass may be used and in all location areas provided that the requirements of 9.8.3 are met.

On sailing craft of any design category and on motor craft of design categories **R**, **R100**, **R200** and **B** or **R0** semi-fixed plates made of glass may be used, provided that high-impact-resistant glass is used or if the appliance is equipped with a deadlight. Besides, contact of metal to glass shall be avoided.

9.8.4.3. Fastening requirements.

9.8.4.3.1. Fastening of plates and frames.

With the help of mechanical means, glue or elastomer joints (rubber resin), Plates and frames can be fastened. Watertightness of the plate or frame

shall be ensured by all types of fastening, and resistance to loads due to normal operating pressure.

Every part of the mechanical elements connecting appliances to the rest of the craft shall be capable of withstanding, without breaking, twice the force induced by the pressure loads defined in 9.10.2.1. Verification of this requirement shall be done for inwards opening appliances, where hinges, locks, or any other part of the link chain between the plate and the support shall be checked by calculation or testing.

9.8.4.3.2. Fastening of semi-fixed plates.

Due to deflection or temperature changes, mechanical fasteners shall not induce stress concentration. For instance, bolts in sharp angle counter bores and countersunk screw heads in conical bores shall not be used.

9.8.4.3.3. Fastening of glued plates.

Glued joints shall be resistant to (or protected against) sunlight (UV, heat etc.) and all environmental effects and cleaning chemicals normally encountered in the manufacture and use of the craft.

Glued joint shall fulfill the requirements of one of the following items:

a. The inside pressure test according to ISO 12216:2002 (D3.2);
b. The separation test according to ISO 12216:2002 (D3.3);
c. The manufacturer's gluing procedure and conditions are followed and the bond strength checked by calculation to meet test pressure according to ISO 12216:2002 (D3.2.2). Verification of the above requirements shall be done after any change in material or gluing procedure.

9.9. Manholes

9.9.1. The Register does not regulate the height of coamings of manholes.

9.9.2. Metal shall be used to manufacture covers of manholes.

The thickness of the covers shall correspond to that of the plating on which they are fitted.

9.9.3. With the help of bolts or pins with nuts, the covers of manholes shall be efficiently attached to the coaming or doubling ring.

9.9.4. When secured, the covers shall be tight both for water and liquid stores for which the tanks or compartments are intended under the inner pressure corresponding to the test pressure of the tank or compartment under consideration.

The tightness shall be provided by a rubber or other suitable gasket. The gasket shall be resistant to the liquid stores referred to above.

SECTION 10 COCKPITS

Contents

10.1. Definitions and Explanations

10.1.1. For the purpose of this Section, the following definitions and explanations have been adopted.

Quick - draining cockpit is a cockpit or recess having its characteristics and drainage rate in accordance with all the requirements of this Section for a craft of particular class.

Cockpit top is the upper deck or outer side upper edge in way of cockpit over which the cockpit may be flooded from the side.

Watertight cockpit is a cockpit which satisfies the requirements of the present Section in respect of watertightness and sill height, but not in respect of the drain.

Cock pit bottom height, H_B is the height of the cockpit bottom above the water line, the craft being upright and fully loaded.

Sill height, h_S is the height of sill, either the top of a fixed sill, or of the mobile part, when closed, of a semi-fixed sill.

Cockpit water - retention height, h_C is the height of water contained in the cockpit measured between the cockpit bottom and the point of overflow outboard, the craft being upright and fully loaded.

Notes:

a. This term corresponds to the lowest point where the overflow area, expressed in square metres, exceeds $0.005L_H \cdot B_{max}$ and is usually the lowest point of the cockpit coaming.

b. For assessing h_C, every closing appliance, including the companionway door(s) is assumed to be closed.

Companion way door is a door or closing appliance intended to close a companionway opening.

Cock pit bottom is the lowest surface of the cockpit where water collects before being drained. A cockpit bottom may have one or more levels.

Note. Devices raising the standing level(s) from the rigid part of the cockpit, e.g. grating, stands, bridge decks are not considered as part of the cockpit bottom.

Drain is an outlet of the cockpit enabling any water contained to be discharged outboard by gravity. A drain can be a pipe discharging overboard above or below the waterline; a part of the cockpit allowing direct discharge overboard;

— Scuppers and freeing port, etc.

Wash boards are a closing appliance for companionway opening made of several mobile boards that, when closed, are stacked one on top of each other.

Notes:

a. This is a very frequent device on sailing and non-sailing craft.

b. Boards are added as the weather worsens to constitute a higher sill.

Closing appliance is a device used to cover an opening in the cockpit, hull or superstructure, for instance, a hatch cover, window, door, engine cover, washboards, etc.

Cock pit is an open device built in the deck, which is intended to accommodate the crew and all the means of craft control.

Note. This device is mainly applied on board sailing and non-sailing craft.

For the purpose of the present Section, this is any area that may retain water, however briefly, due to rain, waves, craft heeling, etc.

This means that a cockpit may be located amid crafts or in the after part of the craft;

In some cases, the cockpit structure may include nearly all the craft;

A cockpit may open aft to the sea;

Bulwarks may create a cockpit or recess

Sill is a structure serving as a border around an opening in a deck, platform, bulkhead, enclosure, etc.

Cock pit sill is a barrier above which water in the cockpit may enter companionway openings and down flood the craft.

Note. The lids to cockpit lockers or any opening other than the companionway opening, and leading into non-quick-draining parts of the craft are not considered to be sills if the closing appliance covering them fulfills the watertightness requirements of 10.6.

Cock pit volume coefficient, K_C is the ratio between the cockpit volume and the reserve buoyancy, as determined from formula

$$K_C = \frac{V_C}{L_H B_{max} F_M}$$

Minimum cock pit bottom height, H_{Bmin} is the minimum value of H_B required by these Rules.

Minimum sill height, h_{Smin} is the minimum value of sill height required by these Rules.

Bridge deck is the area above the cockpit bottom, onto which people normally step before entering the accommodation.

Cock pit volume, V_C is the volume, in cubic metres, of water that can be instantaneously contained in the cockpit before discharge, which is the volume below h_c .

Cock pit sole is essentially horizontal surface(s) of the cockpit on which people normally stand.

Semi - fixed sill is any closing appliance movable, but permanently attached to the craft, which when in place, constitutes a sill higher than the fi xed sill, for instance, sliding or hinged doors, hatches, sliding sills, but excluding washboards. A lanyard is not regarded as a permanent attachment.

Companion way opening is an opening (hatchway or doorway) giving way to accommodation. There may be several companionway openings.

Fixed sill is a sill being a fixed, integral and permanent part of the cockpit or hull.

Recess is a local cavity, groove or indentation generally in a bulkhead of the hull. In some craft with the engine located aft, it may be an after peak bulkhead enclosure

provided for the engine, while the forward section of such an enclosure may be lifted to deck level.

Self - draining cockpit is a cockpit from which water may be drained overboard in some of the craft conditions without precise drainage rates or heights of

Cock pit bottom or sills.

Degree of watertightness is ability of a closing appliance, fitting or surface to resist the ingress of water. The degree of water tightness is summarized as follows.

Degree 1. Degree of tightness providing protection against effects of continuous immersion in water.

Degree 2. Degree of tightness providing protection against effects of temporary immersion in water.

Degree 3. Degree of tightness providing protection against splashing water.

Degree 4. Degree of tightness providing protection against water drops falling at an angle of up to 15 ° from the vertical.

Note. For details, see Section 9.

10.1.2. For the purpose of this Section, the following symbols have been adopted

Symbol	Unit	Meaning
L_H	m	Length of hull
B_{max}	m	Maximum beam
F_M	m	Freeboard amid crafts
d	mm	Drain diameter in millimetres
D	m	Drain diameter in metres
h_C	m	Cockpit water retention height
H_B	m	Cockpit bottom height above the waterline
$H_{B\ min}$	m	Minimum cockpit bottom height above the waterline
h_S	m	Sill height
$h_{S\ min}$	m	Required minimum sill height
k_c	-	Cockpit volume coefficient
t_{max}	min	Maximum allowable draining time
V_c	m^3	Cockpit volume
Heights measured above the cockpit bottom have symbols beginning with h, whereas heights measured above the waterline have symbols beginning with H.		

10.1.3. For the purpose of this Section, the following arithmetic symbols have been adopted for the drawings:

1 − waterline;

2 − cockpit bottom;

3 − overflow point;

4 − cockpit top;

5 − seats;

6 − drain;

7 − access companionway;

8 − top of fixed part;

9 − top of mobile part;

10 − bridge deck;

11 − sole or grating;

12 − grating flowing section;

13 − companionway closed by washboards.

10.2. General

10.2.1. In order to ensure strength, the cockpit shall be an integral part of the craft hull. The cockpit shall be watertight, i.e. all the openings therein lying below the overflow point shall be provided with watertight closing appliances except for those mentioned under 10.4.2.2. In open transom cockpits, the lower edge of the access companionway sill shall not be located below the cockpit top.

10.2.2. Craft condition

The requirements of the present Section shall meet the craft loading conditions corresponding to full displacement with the craft upright in smooth water.

10.2.3. Watertight cockpits and recesses

10.2.3.1. In accordance with the requirements of 10.5.1, watertight cockpits and recesses shall have their sills; show a degree of watertightness in accordance with the requirements of 10.6.

10.2.3.2. When the assessment of craft stability and reserve of buoyancy is done in accordance with the requirements of Part IV “Stability, Reserve of Buoyancy and Freeboard”, watertight and self-draining cockpits/lockers shall be considered full of water.

10.2.4. Quick-draining cockpits and lockers

10.2.4.1. In accordance with the requirements of 10.4, quick-draining cockpits and lockers shall have the bottom height; have the draining devices in accordance with the requirements of 10.7 − 10.13; have sills in accordance with the requirements of 10.5.2; show a degree of watertightness in accordance with the requirements of 10.6.

10.2.4.2. When the assessment of craft stability and reserve of buoyancy is done in accordance with the requirements of Part IV “Stability, Reserve of Buoyancy and Freeboard”, watertight and self-draining cockpits/lockers fully complying with the requirements for quick-draining cockpits may be considered empty.

10.2.5. Self-draining cockpits and lockers

Self-draining cockpits that are not quick-draining cockpits shall be considered as watertight cockpits.

10.2.6. The requirements of Section 9 and 10.6 shall be complied by the closing appliances fitted in watertight cockpits and quick-draining cockpits, and giving access to the craft interior.

10.2.7. A description of cockpits and lockers provided on board, with indication of their type shall be included in the Owner’s manual.

10.3. Typical Structures and Main Characteristics

10.3.1. Flat-bottomed cockpits

10.3.1.1. Cockpit with a semi-fixed sill.

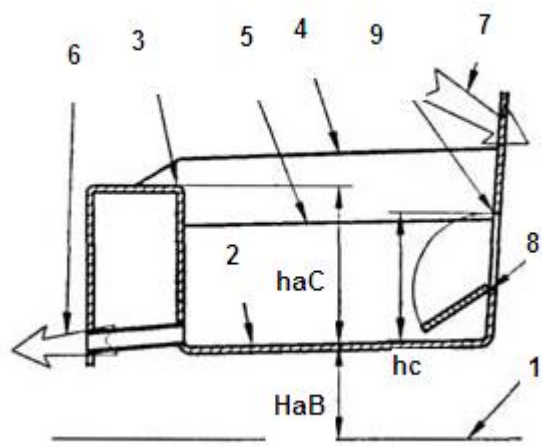

Figure: 4.10.1

From the center of the bottom surface, H_B and h_C are measured. Measurement of the sill height h_S is done from the closest point of the bottom.

10.3.1.2. Cockpit with open transom and semi fixed sill.

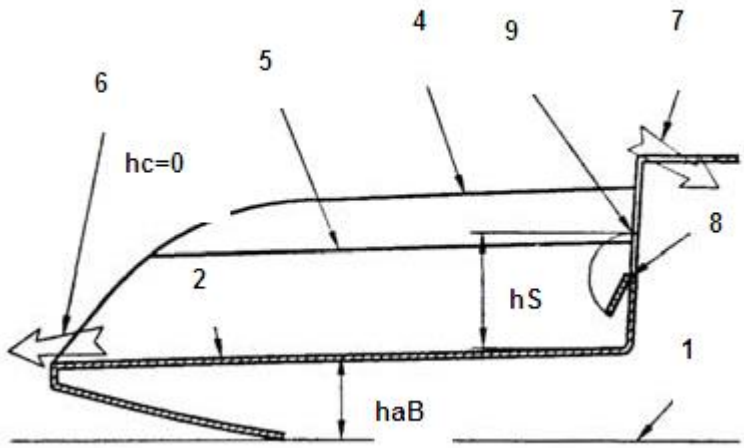

Figure: 4.10.2

Drainage may be omitted if there is no cockpit water retention (h_C = 0), but the requirements for the minimal sill height (h_S) shall be complied with.

10.3.1.3. Cockpit with an opening in the transom An additional drain on the port side may be required

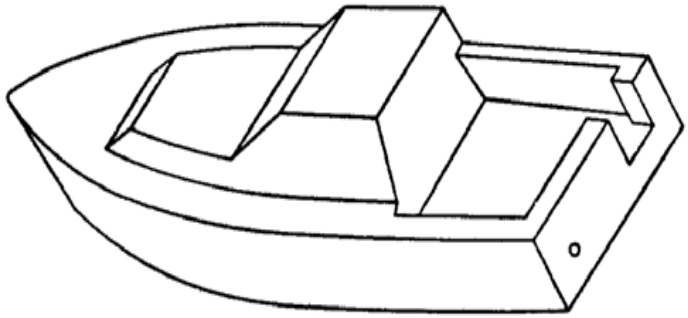

Figure: 4.10.3

10.3.1.4. Cockpit having a transom door with a bottom gap.

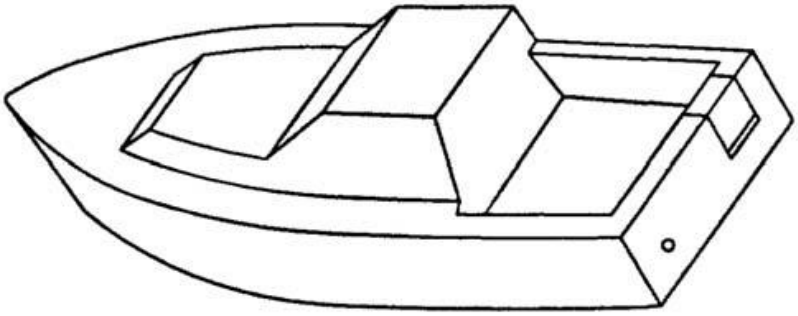

Figure: 4.10.4

The door shall be considered closed. The gap between the door and its lower sill is considered to be a drain freeing port. Its dimensions may be sufficient for draining time requirements. However, 90 per cent of cockpit shall drain at 10° heel, which may require an additional drain on the port side.

10.3.1.5. Cockpit with a bridge deck, grating and washboards above the sill

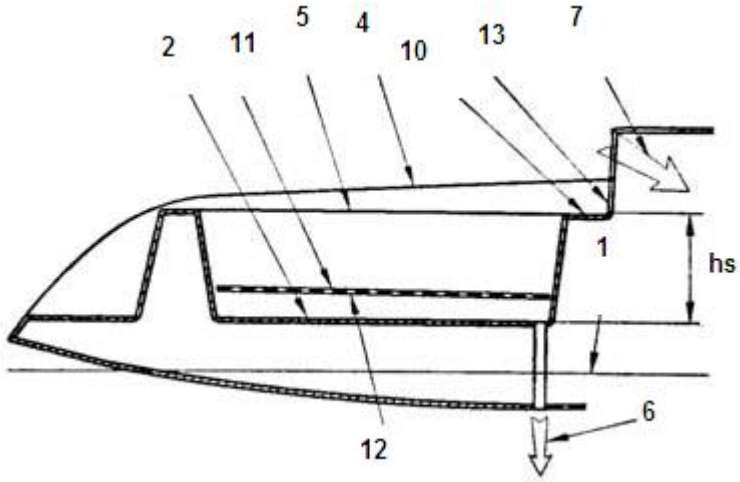

Figure: 10.3.1.5

A raised sole, such as a grating, does not alter the sill requirements above the cockpit bottom. In no way shall the grating impair the efficiency of the draining and shall have a total flow section at least 3 times the drain section

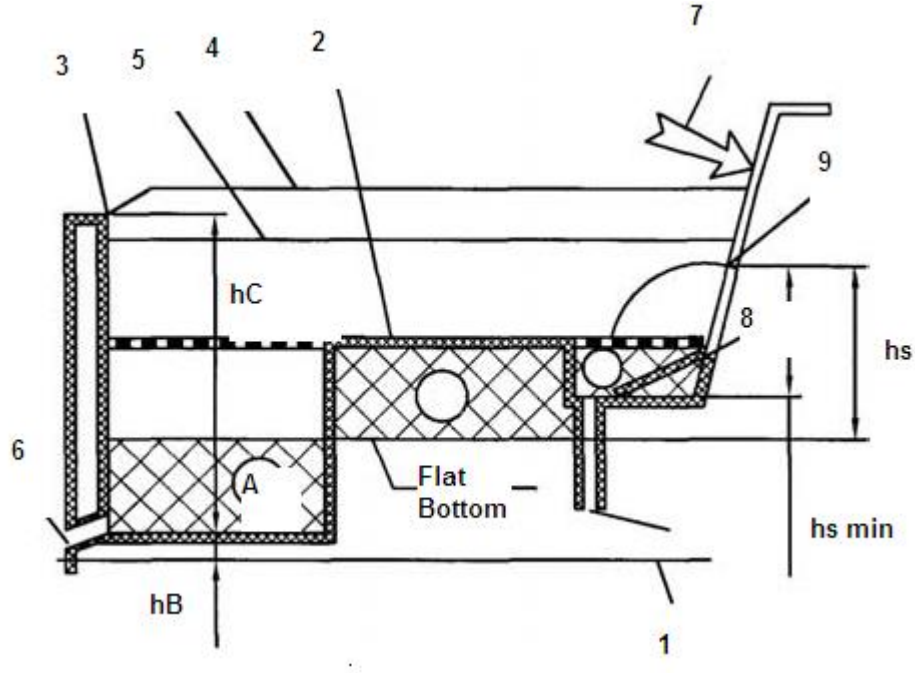

Figure: 10.3.2

10.3.2. Multilevel cockpits

Multilevel cockpits shall comply with the general requirements and the requirements for flat-bottomed cockpits, with due regard for the following.

10.3.2.1. Measurement of the cockpit bottom height, H_B, above the waterline shall be done upwards from the waterline assigned in accordance with 10.2.2 to the center of the lowest bottom level. In so doing, it is permitted to use the exceptions mentioned in 10.4.2.

10.3.2.2. Between the point of overflow overboard and the point at which the height H_B is measured, cockpit water-retention height, hC, shall be measured.

10.3.2.3. Sum of volumes above each bottom level of the cockpit, which are determined by multiplying the plan area of the level in question by the retention height corresponding to that level, is defined as cockpit volume. In so doing, the craft condition shall be in accordance with the requirements of 10.2.1.

10.3.2.4. The distance between the companionway lower edge and the nearest point on the symbolic plane of a single-level bottom is defined as companionway sill height, hS. The symbolic plane of a single-level bottom shall be parallel to the horizontal plane of the waterline complying with the requirements of 10.2.1 and to correspond to the horizontal position for which conditional exclusions and additions of volumes above/below all the bottom levels would be balanced. The adopted height, h_S, of companionway sills shall be in accordance with the requirements of 10.5.

10.3.2.5. The minimum sill height, h_S min, required by 10.5 shall be invariably ensured for the bottom level nearest to the opening as well as for other levels. Elevations above the highest bottom level such as the bridge deck mentioned under 12.3.1.5 may be included in the required sill height.

10.3.2.6. For multilevel cockpits, the draining time stipulated under 10.8 shall be established proceeding from the total volume determined in accordance with 10.3.2.3. The draining time for particular levels shall not exceed that required by 10.8.

10.3.2.7. When making the drain cross-sectional area analysis at particular levels, as stipulated by 10.3.2.8, an allowance for the overflow from volumes lying above higher levels of bottom shall be made even where a separate drainage is provided for these. In the assumption of a uniform fall of water level, it is recommended that, for calculation purposes, the volume of water lying above higher levels shall be supposed to flow over to lower levels from a point lying in the mass center of the volume in overflow.

10.3.2.8. In the bottom of a multilevel cockpit, provision shall be made for drainage on levels from which water cannot flow over to lower levels or overboard.

10.4. Minimum Quick-Draining Cockpit Bottom Height above the Waterline

10.4.1. The minimum quick-draining cockpit bottom height, H_B min, m, above the waterline shall not be less than that stipulated in Table 4.10.1.

Table 4.10.1: Minimum bottom height

Design category	Height, H_{Bmin} , m
R, **R100**, and **R200**	0.15
B	0.1
R0, C1, C2 and C3	0.075
D	0.05

Note. In order to fulfill the maximum acceptable draining time according to 10.8, greater heights than these minimum values may be required.

10.4.2. Exceptions to 10.4.1 for recesses or lockers

10.4.2.1. Surfaces up to a total 10 per cent of the horizontal projection of the cockpit bottom may lie lower than required by 10.4.1. Among these surfaces, those containing water

after the cockpit has drained will be considered full of water when assessing the fully loaded condition.

10.4.2.2. Lockers placed in the cockpit bottom and walls, which are intended for the storage of life rafts, ice, fish, baits, etc. are not regarded as part of the cockpit and are not required to comply with the requirements of 10.2.4, unless their closing appliances fulfill all the requirements of 10.6, provided they are watertight towards the interior of the craft. In this case, they shall be considered full of water when assessing the fully loaded condition. These lockers need not be considered full of water, but only filled with the maximum loading corresponding to the fully loaded condition if the requirements of 10.2.4 and 10.6 are fulfilled.

10.5. Sill Height and Openings in Cockpits

10.5.1. Watertight cockpits

In watertight cockpits, at least by 0.05 m the cockpit water retention height h_C shall be exceeded by the sill height for openings, as determined for craft conditions in accordance with 10.2.1 and 10.3. Except those that are mentioned under 10.4.2.2, watertight cockpits of a height less than the cockpit water retention height h_C shall have no openings to the craft interior

10.5.2. Quick-draining cockpits

In quick-draining cockpits, the sill height h_S for openings above the cockpit bottom shall not be less than the height h_{Smin} stated in Table 4.10.2. Closing appliances according to the requirements of 10.6.2 shall be provided for openings in quick-draining cockpits below the water retention height h_C.

Minimum sill height, $h_{S\ min}$

Table 4.10.2

Design category	Sill height, $h_{S\ min}$, m	
	Sailing mono hulls	Sailing multihulls and non-sailing craft
R, **R100**, and **R200**	0.3	0.2
B	0.25	0.15
R0 and C1	0.2	0.125
C2	0.15	0.1
C3	0.1	0.075
D	0.05	0.05
In order to ensure the required stability and subdivision of a particular craft as per Part IV “Stability, Reserve of Buoyancy and Freeboard” a sill height exceeding the stated value may be necessary		

With the exception of companionway door(s) when, measuring the sill height and the and the semi-fixed parts of the companionway sill – secured in a position providing for a maximum sill height, all closing appliance shall be considered closed.

The sill height shall be vertically measured from the cockpit bottom to the lowest point on the sill edge that allows ingress of water.

If the cockpit bottom is not horizontal, the measurement of the sill height shall be to the closest point of the cockpit bottom.

The parameter h_{Smin} shall also be used when considering multilevel cockpits.

10.6. Water tightness Requirements

10.6.1. Water tightness of cockpits

All surfaces of watertight and quick-draining cockpits up to the water retention height h_C including the surfaces of spaces mentioned under 10.4.2.2 shall comply with the requirements for water tightness degree 1.

10.6.2. Water tightness of closing appliances

The water tightness degrees of the closing appliances fitted on the surfaces of quick-draining cockpits except those mentioned under 10.4.2.2 shall comply with the requirements of Table 4.10.3. Fitting of the closing appliance located in the bottom, horizontal areas and sides of quick-draining cockpits up to the height $h_{Smin,}$ shall be done with seals and sills at least 12 mm high and tested for water tightness in accordance with the requirements of Section 9.

Table 4.10.3: Water tightness of closing appliances

Location of closing appliance in cockpit	Degree of water tightness
Bottom and horizontal areas	2
Sides up to h_{smin}	2
Sides between h_{smin} and 2 h_{smin}	3
Sides above 2 h_{smin}	4
Note. In order to ensure the required stability and subdivision of a particular craft as per Part IV 'Stability, Reserve of Buoyancy and Freeboard,' a water tightness exceeding the stated value may be necessary.	

When in use, semi-fixed sills and washboards shall have a device maintaining them in place, which shall at least be operable from inside.

The requirements of Section 9 shall be met by semi-fixed sills and washboards.

Semi-fixed sills shall only be detachable with the use of tools.

Where a closing appliance includes washboards as components, a 100 % reserve of these shall be carried which shall be stowed in the vicinity of the closing appliance, capable of being reached quickly and safely without the use of tools.

10.7. Drainage of Quick-Draining Cockpits

10.7.1. With the help of gravity only, draining shall be carried out.

10.7.2. When the craft is upright, in accordance with 10.4.2, at least 98 per cent of the cockpit volume shall drain, excluding any recess.

10.7.3. When the craft is heeled to both port and starboard, then the requirements of 10.5.1 and 10.5.2 shall be fulfilled, with due regard for the following:

10.7.3.1. On sailing mono hulls, provision of the drainage shall be done for at least 90 per cent the cockpit volume V_C at the lesser heel angle of 30°, or when the deck at side begins to touch the water;

10.7.3.2. On non-sailing craft and multihulls, provision of the drainage shall be done for at least 90 per cent of the cockpit volume V_C at 10° heel.

10.8. Draining Time

10.8.1. The time needed to drain the cockpit from the full height of water, h_C, down to a remainder of 0.1 m above cockpit bottom is known as the draining time. Draining time requirements are established proceeding from the craft's navigation area and with due regard for the cockpit volume coefficient, K_C, determination of the ratio between the cockpit volume and the reserve buoyancy of the craft, are to be done in accordance with 10.1. A correspondingly small drainage time shall be required by large cockpit volume relative to the craft's reserve buoyancy.

The draining time shall not exceed that stated in Table 4.10.4. Measurement and calculation of the draining time shall be done with every appliance in the cockpit closed.

Draining time assessment is not required if the draining section, expressed in square meters, is greater than or equal to 0.05 V_C.

Measurement of the cockpit volume, V_C, shall be done from the cockpit bottom up to the top of h_C, with the eventual exception of 10.4.2, with the assumptions that all closing appliances and drains are closed.

Table 4.10.4: Maximum acceptable draining time, t_{max}

Design category	T_{max} , min
R, R100 and R200	0.3 / K_C, but not greater than 5
B	0.4 / K_C, but not greater than 5
R200	0.5 / K_C, but not greater than 5
C1	0.6 / K_C, but not greater than 5
C2	0.7 / K_C, but not greater than 5
C3	0.8 / K_C, but not greater than 5
D	0.9 / K_C, but not greater than 5

During the trials of the prototype craft which shall have a displacement close to full-load displacement, measurement of the practically secured draining time shall be done and a trim in accordance with the design. Upto h_C, the cockpit shall be filled with water and measurement of the draining time to empty the cockpit between h_C to 0.1 m of water remaining in the cockpit is done. Measurement of this latter height shall be done above the Centre of the bottom surface of the cockpit. It may be useful to indicate the point located 0.1 m above the center of the cockpit bottom with a tape mark.

10.9. Number of Drains

10.9.1. Each quick-draining cockpit shall have at least two drains, one port and one starboard, unless one opening enables drainage when the craft is heeled to both port and starboard, as required in 10.7.

10.10. Drain Dimensions

10.10.1. Internal dimensions of the drain

The draining time of the cockpit shall be ensured by the internal dimensions, as required by 10.8. In accordance with 10.10.3 at the craft design stage, the internal dimensions of the drain shall be determined. The minimal internal diameter of drains with a circular cross section shall be 25 mm. Drains with other cross sectional shapes shall have a cross-sectional area of at least 500 mm^2 and a minimum dimension of 20 mm. The possibility of inadvertent closure of drains by loose equipment, rigging, etc. shall be ruled out.

10.10.2. Protective grids

One shall be aware that a grid of small holes is prone to be clogged if the drains are equipped with protective grids or other devices preventing loose objects from falling into the draining system. The minimum passage dimension inside any part of these devices shall have a section of 125 мм^2 (or a diameter of 12 mm) at least, and a total entry cross-section of 1.5 times the cross section of the drain at least. The head losses from the protective grid shall be considered, if the above conditions are not met.

10.10.3. Determination of drain cross section

For craft design purposes, determination of the internal cross-sectional area of openings that is necessary to drain the cockpit within the time required by 10.8 shall be done by calculation which shall consider all the head losses in the drain system including inlet losses and outlet losses. With the drain outlet below the waterline, measurement of the head shall be done upwards of the waterline of floatation determined with due regard for the requirements of 10.2.1. With the help of methods described in Annexes B, C, D and E of ISO Standard 11812:2001 “Small Craft. Watertight Cockpits and Quick- Draining Cockpits”, the calculation of the required cross section may be done.

10.11. Centre board Casings and Other Types of Drain

10.11.1. Centre board casings and other types of aperture may be used as drains if they are designed for this purpose.

10.12. Drain Piping

10.12.1. During craft operation, the scantlings and design of drains shall consider all the loads to which they may be subjected to. Protection of the drain piping shall be done against damage from loose objects stowed in the craft and against being kicked and stepped on. Drain piping shall not trap water and shall only be used for cockpit drainage. Applications of this requirement are not done to the drains that are fitted in centerboard housing or outboard wells and trunks. Recommendations are made that the drain piping are to be designed without bends. Where the bends will be present, in order to avoid clogging of bent sections the piping shall be designed with a radial distance equal to 10 diameters at least. The requirements of Chapter 5 “Machinery Installations. Machinery. Systems and Piping” shall be complied by Sea valves drain fittings in the hull and piping sections.

10.13. Drain Fittings

10.13.1. The drain outlet running through the hull shall be located above the waterline. In accordance with 10.12 it shall be fitted with a seacock, where the cockpit is not an integral part of the hull and the drain outlet is located below the waterline or up to $0.75H_{Bmin}$ above the waterline. Fig. 4.10.6 shows a drain outlet integral with the hull, no seacock is required.

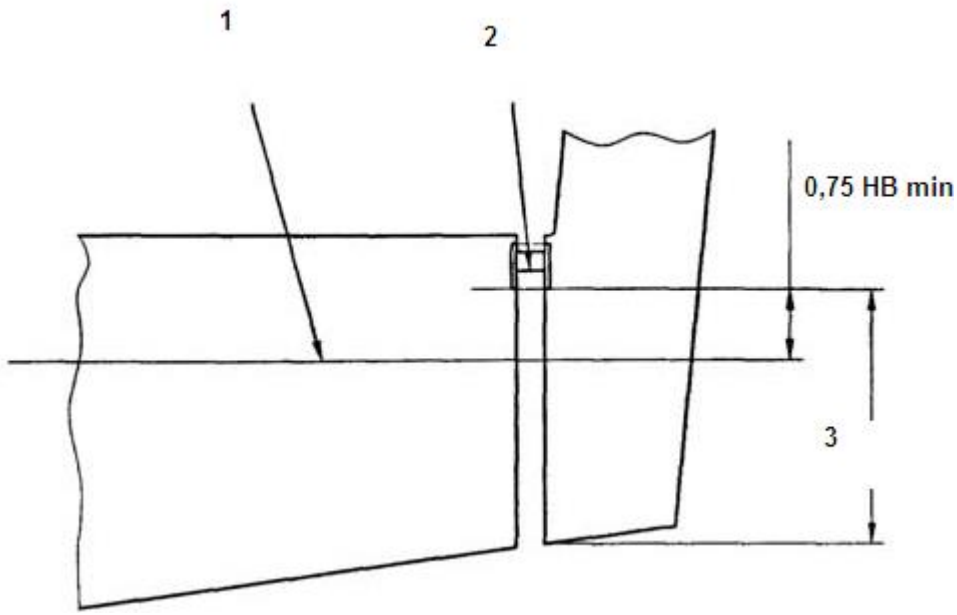

Fig. 4.10.6

Drain integral with the hull shell

1 – water line;

2 – top of integral penetration above 0,75 H_{Bmin}, no seacock required;

3 − in this area, the drain shall be integral with the hull shell

SECTION 11 SIGNAL MEANS

Contents

11.1. General

11.1.1. Applications of the requirements of the present Section of the Rules are done to the craft signal means. Applications of the requirements of this Section are only done to inland navigation craft that is not classified by Resolution № 30 of 12 December 1992 developed by the Working Group on Inland Water Transport of the UN Economic Commission for Europe and shall be used taking into consideration the navigation rules applicable to these inland waters.

11.1.2. In this Section of the Rules, the following definitions and explanations have been adopted. White light , red light , green light , yellow light and blue light − lights complying with the requirements of 10.1.4 and 10.2 depending on the craft's main navigation area.

Side lights − a green light on the starboard side and a red light on the port side each showing an unbroken light over an arc of the horizon of 112.5 degrees and so fixed as to show the light from right ahead to 22.5 degrees abaft the beam on its respective side. The side lights may be combined in one lantern carried on the fore and aft centerline of the craft in a craft of less than 20 meters in length.

Stern light − a white light placed as nearly as practicable at the stern showing an unbroken light over an arc of the horizon of 135 degrees and so fixed as to show the light 67.5 degrees from right aft on each side of the craft.

Short blast − a blast of about one second's duration.

All - round light – a light showing an unbroken light over an arc of the horizon of 360 degrees.

Floating installation − any floating installation, mostly related to berth-connected craft;

Floating craft − a floating structure intended for operations in water areas and having no propulsion machinery.

Flashing (rapidly scintillating) light

– A light flashing at a rate of 120 light periods or more per minute.

Prolonged blast − a blast of approximately four seconds' duration, the interval between the two successive prolonged blasts being approximately 1 second.

Navigation areas – navigation areas, basins and/ or water areas where the requirements of the following Rules may apply:

Oceans and seas where IRPCS-72 applies;

Inland waterways, where crafting regulations applicable to oceans and seas covered by IRPCS-72 are adopted

Light - impulsive flashing light − a device showing a white flashing light over an arc of the horizon of 112.5° in the direction ahead from the craft's beam (overlapping the fore and aft Centre line by 22.5°) and 112.5° in the direction astern from the craft's beam (overlapping the fore and aft Centre line by 22.5°). Flashing lights that are having the colours of the corresponding sidelights may be used.

A succession of very short blasts – a succession of at least six blasts, of about ¼ second duration each, the pauses between the blasts being about ¼ second

Floating object − a raft, or other structure, object or assembly capable of navigation, not being a craft or floating equipment or establishment, for example, an assembly of a towed water craft with the towing craft (a craft, cutter or water cycle).

"Side - by side formation" − an assembly of craft coupled rigidly side by side, none of which is positioned in front of the craft propelling the assembly.

Mast head light − a white light placed over fore and aft centerline of the craft showing an unbroken light over an arc of the horizon of 225 degrees and so fixed as to show the light from right ahead to 22.5 degrees abaft the beam on either side of the craft.

Three - tone sound signal − a signal repeated three times and composed of a succession of sounds of the total duration of a three-tone signal is about 2 seconds. The sound frequency shall be from 165 to 297 Hz, and the difference between the highest and the lowest tones shall be at least two complete tones. Each succession shall be started from the lowest tone and finished by the highest tone.

Flashing (scintillating) light − a light flashing at a rate of 50 to 60 (!) light periods per minute.

Strong light , bright light and ordinary light − lights the characteristics of which correspond to 10.1.5, 10.1.6 and 10.2, as well as to the requirements of IRPCS or to European Inland Navigation Rules, depending on the main area of navigation.

11.1.3. Colour of signal lights

11.1.4.1 Application of a five-colour signal system shall be done to the lights, comprising white, red, green, yellow and blue colours. Conformation of this system shall done to the recommendations of the International Commission on Illumination, "Colours of Signal Lights", IEC publication № 2.2 (TC-1.6) 1975

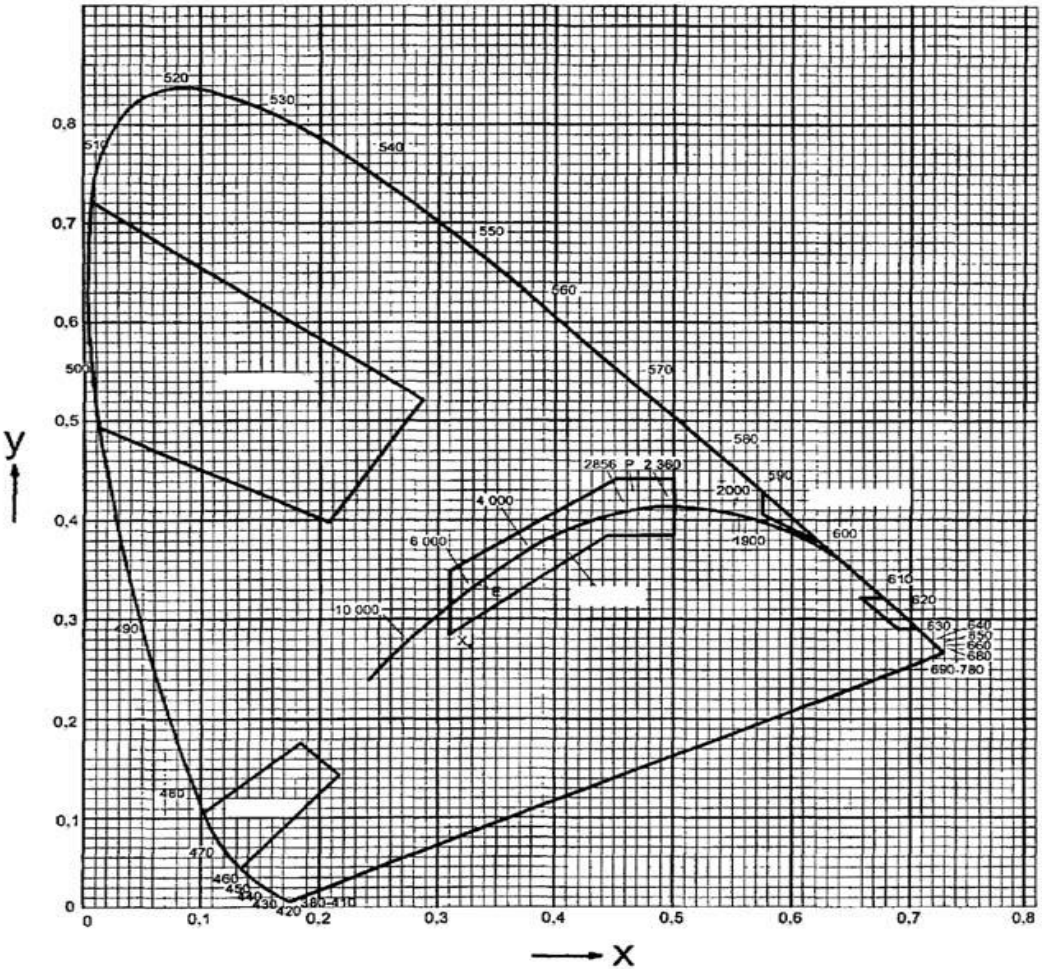

Figure 4.11.1

IEC chromaticity diagram:

2360K corresponds to the light of a vacuum filament lamp;

2848K corresponds to the light of a gas-filled filament lamp.

11.1.4.2 The colour boundaries of signal lights shall be demarcated by the coordinates of the intersecting points of the chromatic diagram in IEC publication № 2.2 Publication of CIE (TC-1.6) 1975 (see chromaticity diagram in Fig. 4.11.1) as follows.

Table 4.11.1

Colour of signal light	**Coordinates of the intersecting points**						
White	X	0.310	0.443	0,500	0.500	0.453	0.310
	У	0.283	0.382	0,382	0.440	0.440	0.348

Red	X У	0.690 0.290	0.710 0.290	0.680 0.320	0.660 0.320		
Green	X У	0.009 0.720	0.284 0.520	0.207 0.397	0.013 0.494		
Yellow	X У	0.612 0.382	0.618 0.382	0.575 0.425	0.575 0.406		
Blue	X У	0.136 0.040	0.218 0.142	0.185 0.175	0.102 0.105		

11.1.4. **Luminous intensity and visibility range of lights.**

11.1.5.1. General.

a) Classification of signal lights may be done depending on their luminous intensity:

Ordinary lights;

Bright lights;

Strong lights.

b) Relation between I_0, I_6 and t:

I_0 − the photometric luminous intensity in candelas

(cd) measured at normal voltage for electric lights;

I_6 − the operational luminous intensity in candelas (cd);

t − the range of visibility in kilometers (km).

For example, considering the ageing of the light source, the degree of dirtiness of the optic and variations in the voltage of the on-board grid, I_6 is taken as 25 % less than I_0.

Consequently, $I_6 = 0.75 \cdot I_0$

The relation between I_6 and t of signal lights is given

by the following equation:

$I_6 = 0.2\, t^2\, q_{-t}$. (11.1.5.1.2)

Corresponding to a meteorological visibility of 14.3 km (approximately 8 nautical miles), the atmospheric transmissivity coefficient q is taken as 0.76.

11.1.5.2. Intensity and range of the signal lights. Table 4.11.2 set out below contains the permitted limits for I_0, I_6 and t, according to the nature of the signal lights. Application of the values that are indicated shall be done to the light flux that are emitted by the signal lanterns.

Table 4.11.2: Maximum and minimum values of I_0, I_6 and t

Nature of the signal lights		Colour of signal lights							
		White		Green and red		Yellow		Blue	
		min	max	min	max	min	max	min	max
I_0	2.7	10.0	1.2	4.7	1.1	3.2	0.9	2.7	
I_6	2.0	7.5	0.9	3.5	0.8	2.4	0.7	2.0	
t	2.3	3.7	1.7	2.8	1.6	2.5	1.5	2.3	
I_0	12.0	33.0	6.7	27.0	4.8	20.0	6.7	27.0	
I_6	9.0	25.0	5.0	20.0	3.6	15.0	5.0	20.0	
t	3.9	5.3	3.2	5.0	2.9	4.6	3.2	5.0	
I_0	47.0	133.0							
I_6	35.0	100.0							
t	5.9	8.0							
Note. I_0 and $I_в$ are given in cd and t − in km.									

11.1.5. Signal light dispersion

11.1.6.1 Horizontal dispersion of the luminous intensity.

a) Application of the luminous intensities indicated in 11.1.5.2 shall be done to all directions of the horizontal plane passing through the focus of the optic or the luminous centre of gravity of the correctly adjusted light source of a vertically positioned signal lantern.

b) For the masthead lights, maintenance of stern lights and side lights the luminous intensities prescribed shall be done throughout the horizontal arc

within the sectors prescribed at least up to within 5° of the limits. As from 5 within the sector prescribed up to the limit, the luminous intensity may decrease by 50 per cent it shall subsequently decrease gradually in such a way that, as from 5° beyond the limits of the sector, only a negligible amount of light remains.

c) In the direction parallel to the axis of the craft forward, the side lights shall have the prescribed luminous intensity. Practically, the intensities shall decrease to zero between 1° and 3° beyond the limits of the prescribed sectors.

d) For bi-coloured or tri-coloured lanterns, the dispersion of the luminous intensity shall be uniform so that 3° on either side of the prescribed sector limits, the maximum permitted intensity is not exceeded and the minimum prescribed intensity is reached.

e) Throughout the sector the horizontal dispersion of the luminous intensity of the lanterns shall be uniform, so that the minimum and maximum values that are observed for the photometric luminous intensity do not differ by more than a factor of 1.5.

11.1.6.2 Vertical dispersion of the luminous intensity. In the event of heeling of up to ± 5° or ± 7.5° from the horizontal, the luminous intensity shall remain at least equal to 80 per cent in the first case, and 60 per cent in the second case of the luminous intensity corresponding to 0° heeling, although it shall not exceed it by more than 1.2 times.

11.2. Navigational and Technical Requirements to Navigation Lights and Signal Shapes

11.2.1 Navigation lights

11.2.1.1. The requirements of the present Section of the Rules in respect to their construction, materials, way of installation and main characteristics shall be complied by the navigations lights that are permitted for installation on board craft. In compliance with the conditions with the Register, the navigation lights shall be manufactured.

11.2.1.2. Signal lights shall emit continuous and stable light unless otherwise specified in the present Section.

11.2.1.3. Depending on the craft's length, the light sectors and range of visibility of the navigation lights shall comply with the standards specified in Tables 4.11.3 and 4.11.4.

Table 4.11.3: Navigation lights of Small craft

No s	Type and colour of light	Length of the craft L_H, m	Nature of light	Arc of visibility in the horizontal plane, deg.	
				Total angle	Position
1	Masthead, white	$L_H > 20$	Strong	225	112,5 ° from right ahead on either side from the fore and aft centerline of the craft
		$7 \leq L_H \leq 20$	Bright		
		$L_H < 7$	-		
2	Sidelight, green	$L_H > 20$	Bright	112,5	From right ahead to 22,5° abaft the beam on star board side
		$7 \leq L_H \leq 20$	Ordinary		
		$L_H < 7$	–		
3	Sidelight red	$L_H > 20$	Bright	112,5	From right ahead to 22,5° abaft the beam on port side
		$7 \leq L_H \leq 20$	Ordinary		
		$L_H < 7$	–		
4	Stern light, white	$L_H > 20$	Bright or ordinary	135	67,5° from right aft on either side
		$7 \leq L_H \leq 20$			
		$L_H < 7$	–		
5	All-round: White	$L_H > 20$	Bright	360	All round the horizon
		$L_H \leq 20$	Ordinary		
6	All-round: Red Green	Any	Bright or ordinary	360 360	All round the horizon All round the horizon
7	Combined green and red lantern	$7 \leq L_H \leq 20$	Ordinary	225	112,5° on either side of the fore and aft centerline, right ahead: Starboard side – green sector; Port side – red sector
		$L_H < 7$	-		
8	Anchor light, white	Any	Ordinary	360	All round the horizon

9	Flashing light	L_H > 20 in the daytime	Strong	112,5 + + 112,5	Ahead from the craft's beam, overlapping the fore and aft centerline by a sector of 22,5°, also astern from the craft's beam, overlapping the fore and aft centerline by a sector of 22,5°
		L_H > 20 at night	Bright		
10	Light signal:			360	All round the horizon
	Blue	any	Ordinary		
			Bright or ordinary		
	Yellow				
Note. Lights complying with the requirements of IRPCS-72 are permitted.					

Table 4.11.4: Range of visibility of navigation lights on craft navigating in water areas where IRPCS[1] apply

№	Type and colour of light	Length of the craft L_H, m	
		12 – 24	Less than 12
		Range of visibility, miles	
1	Masthead, white	3/5 [2]	2
2	Sidelight, green	2	
3	Sidelight, red	2	
4	Stern light, white	2	2
5	All-round lights: white, red, green or yellow	2	2
6	Combined tri-coloured light with a total light sector of 360°		1 (2 for the white sector)
7	Combined bi-coloured light (green/red)	2	1

[1]The light and visibility sectors are the same as specified in Table 10.2.1-1

[2] The masthead light range of visibility on craft of 20 m in length and more shall be 5 miles, on craft of less than 20 m – 3 miles

11.2.1.4. On either side from the horizontal plane going through the centre of the light source, the required sector of light visibility in a vertical plane of at least 10 degrees shall be provided; while for motor-sailing craft navigating in areas where application of IRPCS-72 is done, such sector of light visibility shall be at least 25°.

11.2.1.5. Under conditions that are specified in 2.2, Chapter 7 “Electrical Equipment”, of the Rules. Main Regulations for the Danube Navigation, all the craft navigation lights shall be reliable in operation.

11.2.1.6. Manufacturing of navigation lights shall be done with help of materials resistant to corrosion or have efficient anti-corrosive protective coating.

11.2.1.7. Electric lights shall be of safe watertight type (IP 56). Lights shall be provided with an arrangement so as to ensure natural drainage of condensate outward and sufficient ventilation which does not impair the required degree of protection from water.

11.2.1.8. The lights construction shall be such as to allow their quick closing and opening and lamp replacement without using special instruments. The light case shall be of such a design so as to allow rapid change of electric or oil/ kerosene lamps. Construction of oil/kerosene lights shall be done in such a manner so as to enable a lamp with its chimney fitted to be inserted into them.

11.2.1.9. In order to be placed in the focus of the lens and of the reflector, fitting of lamps of electric lights shall be done in a vertical position. In order to prevent the lamp and socket from their spontaneous loosening, provision shall be made. In navigation lights, double-filament lamps shall not be used.

11.2.1.10. Covering of inner surfaces of navigation lights shall be done with the help of a protective coating that is resistant to the action of moisture and temperature and not affecting lighting and colour characteristics of lights.

11.2.1.11. It is required for the navigation lights to be other than white, which may be fitted with glass or light filters that is coloured throughout their entire thickness or over the surface only. In each case, the Register shall specially consider the use of coloured lenses. Inner and outer surfaces of lenses and plain glasses shall be smooth, and the glass shall be free from foreign inclusions, blisters and chippings impairing the light characteristics. Inner and outer surfaces of light filters shall be free from notches and indentations, at least, to the extent determined in the national standards agreed upon with the Register or in the specifications approved by the Register. The filter glass shall be free from blisters, foreign inclusions and drops.

11.2.1.12. Manufacturing of lenses, glass and light filters may be done with the help of plastics, provided that their characteristics (colour, temperature resistance, transmission coefficient, light distribution curves and durability) are not inferior to those of glass.

11.2.1.13. Wire reinforcement shall be provided to removable light filters along their entire perimeter or with another equal protection against fractures and mechanical damage that are likely to occur in operation.

11.2.1.14. In order to prevent the possibility of placing the red filter instead of the green one into the starboard light and vice versa, light filters in side navigation lights shall be so constructed.

11.2.1.15. Reflectors used in navigation lights shall have spherical shape and polished surface. The reflector shall be so placed in the light that its focus is in the centre of the light source. The reflection factor shall be not less than 50 per cent. Adjustment of the reflectors diameters and capture angles shall be done to the lamp geometrical parameters.

11.2.1.16. Navigation lights with coloured lights shall be painted in colour corresponding to the colour of the light.

11.2.1.17. Every light shall bear the Manufacturer's trademark, serial number, date of production, trade name, the stamp of the Register or another Classification Society recognized by the Register. Portable lights shall be fitted with handles for transportation and hoisting. Where lights shall be lifted one under the other, they shall be fitted with a second handle at the bottom.

11.2.2 Flashing lights

11.2.2.1. In accordance with the International Regulations for Preventing Collisions at Sea, 1972, and European Code for Inland Waterways (CEVNI), a flash light shall be an electric one, be fitted with appropriate lenses and send separate or group flashing light signals. In order to control the flashing light signals, it is recommended to use automatic devices.

11.2.2.2. A light accompanying sound signals shall be an electric one and send the light signal simultaneously with the actuation of the sound signal.

11.2.3 Signal shapes

11.2.3.1. Suitable devices shall be provided to signal shapes for fixing them to halyards on which they are hoisted, and for joining with other shapes. Fitting of folding shapes shall be done with the help of devices that are retaining them in open position during hoisting and preventing the shapes from spontaneous folding. Devices for joining the shapes one to another (except the cones) shall provide maintaining the specified

distances between them. Signal shapes (cylinders, balls, cones and diamond shapes consisting of two cones having a common base) used on the craft navigating in inland waterways shall comply with the following requirements: Their colour shall not be faded, nor there shall be dirt accumulation on them;

A cylinder shall have a height of at least 0.8 m, and a diameter of at least 0.5 m;

A ball shall have a diameter of not less than 0.6 m;

A cone shall have a base diameter of not less than 0.6 m and a height equal to its diameter;

A diamond shape or a shape consisting of two cones bases together shall have a height of not less than 0.8 m and a base diameter of not less than 0.5 m. The cylinders, balls, cones and diamond shapes consisting of two cones having a common base specified in the present Rules may be replaced by other arrangements showing the same image if seen from a distance.

11.2.3.2. Shields used on inland navigation craft shall comply with the following requirements: unless specified otherwise, the shields shall be rectangular in shape;

The colour of the shields shall neither be faded nor shall there be any dirt accumulated on them. Recommendations are made to fit the sidelights shields of such a length that the distance from the outer edge of the light lens or plain glass to the aft edge of the fore transverse screen is at least 0.6 m. In lieu of the shields, it is allowed to use side walls of the bridge or wheelhouse.

11.2.4 Signal flags, pennants and signal panel

11.2.4.1. Manufacturing of Signal flags with the help of woolen flag cloth (bunting) of sufficient strength and fast colour. The material of the flags may be of synthetic.

11.2.4.2. The shape of the signal flags shall be square. The square side size shall not be less than 500 mm. in case of inland navigation craft, the flag length and width shall be at least 1.0 m or at least 0.6 m for small craft, the length of the pennant shall be at least 1 m and its width at the base – at least 0.5 m.

11.2.4.3. A signal panel shall be provided to each craft. The size of the panel shall be 1 m × 0.8 m and it shall have the craft Register number, its name, port of registry and berth number.

11.2.5 Pyrotechnic signal means

11.2.5.1. Pyrotechnic signal means intended for sending distress signals shall be safe in handling and stowage during all their guaranteed service life.

11.2.5.2. Pyrotechnic signal means shall be safeguarded from moisture and mechanical damage. Where pyrotechnic signal means are kept without any instruments, it shall be possible to open the boxes.

11.2.5.3. Marking of all pyrotechnic means shall be indelibly done with the information on the Manufacturer's trademark, date of issue, storage time, purpose of the object and application instructions. Marking of signal rockets shall be done with an arrow which shows the direction of the rocket flight.

11.2.5.4. Construction of signal rockets shall be done in such a way that they can be operated either by hand or with the help of a special device.

11.2.5.5. All pyrotechnic signal means shall be moisture- and vibration-resistant and not to die out under the action of wind of up to 30 m/s. Throughout the temperature range from − 45° to + 45°C and during the rain, all pyrotechnic signal means shall retain their properties.

11.2.5.6. A rocket parachute flare shall: be contained in a water-resistant casing; be indelibly marked with brief instructions or diagrams clearly illustrating how it shall be operated; have integral means of ignition; be constructed in such a way as not to cause inconvenience to a person operating it in accordance with the Manufacturer's instructions.

11.2.5.7. A vertically fired rocket shall reach an altitude of not less than 300 m and, at or near the top of its trajectory, shall eject a parachute flare. A parachute flare shall have the following characteristics: the flare will burn bright red in colour;

It will burn with an average luminous intensity of not less than 30000 cd;

The burning period should be not less than 40 s;

It should have a descent rate of not more than 5m/s;

The parachute should not be damaged while burning

11.2.5.8. A hand flare shall meet the following requirements:

It shall have brief instructions or diagrams illustrating

Its operation, printed on the outside;

It shall be contained in a water-resistant casing;

It shall have integral means of ignition;

It shall be constructed so that not to cause inconvenience to a person operating it and not to endanger the collective life-saving appliance by burning or glowing remnants after its use in accordance with the manufacturer's instructions;

The hand flare shall burn with a bright red colour;

It shall have an average luminous intensity of not less than 15000 cd;

The burning period shall be not less than 1 min;

It should continue to burn after being immersed for a 10 s period under 100 mm of water.

11.2.5.9. A buoyant smoke float shall meet the following requirements:

It shall be contained in a water-resistant casing;

It shall not ignite in an explosive manner when activated

In accordance with the manufacturer's instructions;

It shall be indelibly marked with brief instructions or diagrams regarding its operation printed on the outside of the case;

It shall emit smoke of a highly visible colour at a uniform rate for a period of not less than 3 min when floating in calm water;

It shall not emit any flame during the time of the smoke emission;

The signal should not be swamped in a seaway;

It must be constructed in a manner so as to emit the smoke when submerged in water for a period of 10 s when under 100 mm of water.

11.2.6 Sound signal means

11.2.6.1. The produced sound signals shall be clear and have no distortions.

11.2.6.2. The construction of sound signal means and materials used for their manufacturing shall provide the range of audibility not lower than specified in Table 4.11.5.

Table 4.11.5: Range of audibility of sound signal means

Type of sound signal means	Range of audibility, km	1/3-octave band level at 1 meter in dB referred to 2×10^{-6} N/m^2
Electric air siren	2.0	
Automobile-type electric signal device	1.5	
Bell	1.0	
Whistle	1.0	120

11.2.6.3. For craft of 12 m in length and more it is recommended to use automatic devices for making sound signals, although provision shall be made for sending the signals manually and for changing the time of sending signals at any moment of the craft's handling.

11.2.6.4. The bell shall give a loud and clear sound and be manufactured of material not requiring protection against corrosion. No painting of the bell is permitted. The diameter of the mouth of the bell shall be of not less than 200 mm. The mass of the striker shall be not less than 3 per cent of the mass of the bell.

11.2.6.5. Mechanical sound signal means used on board craft navigating in inland waterways shall produce sound signals with the following characteristics.

a) frequency:

- the fundamental frequency of sound signal means on power-driven craft with the exception of those of less than 20 m in length shall be 200 Hz with the permitted deviation of ± 20 per cent;
- for non-power-driven craft and for craft of less than 20 m in length the sound frequency shall be higher than 350 Hz;
- for three-tone sound signals made by craft navigating in conditions of restricted visibility with the use of radars the fundamental sound frequencies shall be from 165 to 297 Hz with an interval of at least 2 full tones between the highest and the lowest tones.

b) Sound pressure level:

- for power-driven craft of more than 20 m in length the weighted level of sound pressure shall be 120 – 140 dB (A);
- for non-power-driven craft and for craft of less than 20 m in length the weighted level of sound pressure shall be 100 – 125 dB (A);
- for three-tone signals sounded by craft navigating in conditions of restricted visibility with the use of radars the weighted level of sound pressure of each sound shall be 120 – 140 dB (A). These levels of sound pressure shall be measured or determined at a distance of 1 m ahead from the centre of the bell mouth and, as far as practicable, the measurement shall be carried out in the unobstructed space.

11.3. Fitting of Signal Means on Board

11.3.1. Navigation lights

11.3.1.1 Navigation lights shall be fixed in stationary places provided for them or shall be hoistable with proper-devices fitted on running rigging for their hoisting.

11.3.1.2 As required for the area of navigation, all navigation lights shall be located and in such a way that they can be distinctly visible within all prescribed arcs of visibility.

11.3.1.3 Special devices shall be provided to ensure rapid and correct fitting and securing of the lights in all regular places where navigation lights are located.

11.3.1.4 Checking of the accuracy of placing of the sector light lights shall be done by their position in relation to the centre line plane of the craft. When the craft is on even keel and has neither trim nor heel, horizontal position of lights shall be checked.

11.3.1.5 Protection of all masthead lights shall be done with the help of shields that are fitted below to preclude dazzling of people on the bridge and deck. The shields shall be painted matt black.

11.3.1.6 At the same height, side lights shall be placed, in one line perpendicular to, and at the same distance from the centre line plane of the craft.

11.3.1.7 Protection of side lights at the side facing the centre line plane of the craft shall be done by inboard shields with two transverse screens (fore and aft) perpendicular to the shield. Length of the shields shall be such that the distance from the outer edge of the light lens or plain glass to the aft edge of the fore transverse screen is 0.6 m at least. The breadth of the fore transverse screen shall be such that a line connecting its outer edge to the inner edge of the filament or the light burner is parallel to the craft centre line plane. The aft transverse screen shall be of such a breadth so as to mask completely the light from being seen across the stern, but not hinder showing its light to 22.5° abaft the beam. The height of the shield and of the screens is not to be less than that of the light case. Shields shall be painted matt black on the inside.

11.3.1.8 Lights of all-round visibility (360°) in the horizontal plane, except for anchor lights, shall be so located as not to be obscured by masts, topmasts or superstructures within sectors of more than 6°. In this case the light shall be considered as an all-round source of light with the diameter equal to the outside diameter of the source of light (filament of the lamp, flame of the burner). Two all-round lights shall be installed when it is not feasible to fulfill this requirement by means of fitting of one all-round light. As far as practicable, they shall be located or provided with shields in such a way as to be visible, as one all-round light at a distance of 1 mile and over. All-round lights shall be screened by these shields less than 180°.

11.3.1.9 On power-driven craft that are intended for navigation or navigating in water areas where IRPCS-72 apply, a spare set of lights consisting of a masthead light, sidelights and stern light shall be placed on board in regular positions provided for these lights,

or electric lights with two sources of light shall be used (one source of light is fed from the craft's mains, the other – from the emergency source of power).

11.3.2. Signal shapes

Depending on the craft's intended area of navigation, the location of signal shapes on board shall meet the requirements of either IRPCS-72.

11.3.3. Sound signal means

11.3.3.1 As high as possible above the uppermost deck and at least 0.5 m above superstructures and other structures on this deck which can obstruct the propagation of sound, stationary whistles or tyfons shall be fixed. Their bell mouths shall be directed straight ahead.

11.3.3.2 Control buttons to actuate the whistle or tyfon shall be located at the steering stations of the craft.

11.3.3.3 The bell shall be placed stationary on the clear part of the forecastle deck.

11.3.4. Storage of signal means on board

Storing of the signal means not placed stationary shall be done on board in special readily accessible storerooms, chests or lockers which should be located near the Wheelhouse.

11.4. Supply of Craft with Signal Means

11.4.1. Electric navigation lights shall be provided to the craft. Lights using other sources of white light of the type that is approved by the Register shall be provided to craft having no own sources of electric power may be provided.

11.4.2. When electric navigation lights are used they shall be capable of being changed over to the emergency source of power.

11.4.3. Sound signals used on craft shall be reliable in operation and shall produce the required sound intensity and duration as well as clear sounding of each blast.

11.4.4. The following spare parts and materials for lights shall be provided to each craft of Categories **R, R100 and R200** and **B, R0**, **C_1**:

11.4.4.1. One light filter for each colour light unless the light is provided with a colour lens;

11.4.4.2. One electric lamp for each electric light;

11.4.4.3. Fuel for spare oil lights in such a quantity that provides burning for the whole set of lights within a period of: 32 hours – for craft of categories **R, R100 and R200** and **B**; 16 hours – for other categories of craft;

11.4.4.4. One wick for each oil light;

11.4.4.5. For lights other than electric ones, the set of spare parts shall be determined by the register, separately in each case;

11.4.4.6. Six lamp glasses if all oil lights have glasses of the same size, otherwise each light shall be provided with two glasses.

11.5. Navigation Lights and Signal Shapes Supply Standards

11.5.1. In accordance with the standards specified in Tables 4.11.6 and 4.11.7 signal shapes shall be supplied to all Small crafts.

11.5.2. In accordance with the standards specified in Tables 4.11.8 and 4.11.9 signal shapes shall be supplied to all craft that are intended for navigation and navigating in water areas where the requirements of IRPCS-72 apply shall be equipped with navigation lights. Additional signal means for craft restricted in their ability to maneuver are specified in Table 4.11.9.

Table 4.11.6

Type of the craft and its hull length L_H, m		Signal lights										Signal cone
		Masthead light	Side lights		Stern light	Light flashing lamp	All-round lights				Anchor	
			Green	Red			White	Red	Green	Flashing		
Power-driven	$L_H \geq 20$	1	1	1	1	4	1	2	-	-	1[1]	-
	$L_H < 20$	1	1[2]	1[2]	1[3]	-	1	1	-	-	1[4]	-
	$L_H < 7$	-	-	-	-	-	1	-	-	-	1[4]	-
Sailing	$L_H \geq 20$	-	1	1	1	-	-	1[5]	1[5]		1[1]	
	$L_H < 20$	-	1[5]	1[5]	1[7]	-	-	-	-	-	1[4]	-
	$L_H < 7$	-	-	-	-	-	2[8]	-	-	-	-	-
Craft proceeding under sail when also being propelled by machinery		1	-	-	1	-	-	-	-	-	-	1[9]
Berth-connected craft		-	-	-	-	-	1	-	-	-	-	-

[1] A craft moored to the shore shall carry a white all-round light visible over an arc of the horizon of 360° and placed on the side of the fairway at a height of at least 3 m. This light may be replaced by two usual white lights positioned in the forward and aft parts of the craft, visible over an arc of the horizon of 360° and placed on the side of the fairway.

[2] May be combined in one lantern positioned along the fore-and-aft centerline in the forward part of the craft.

[3] May not be provided on the craft, but in this case the masthead light shall be replaced by an all-round white light visible over an arc of the horizon of 360°.

[4] A small craft at anchor shall display a white all-round light positioned so that it can be seen from all sides.

[5] Recommended lights.

[6] May be combined in one lantern positioned in the forward part of the craft with the preservation of the stern light, otherwise see footnote 5.

[7] Side lights and stern light may be combined in one lantern positioned in the uppermost part of the mast.

[8] Sailing craft of less than 7 m in length may carry a white all-round light visible from all sides and display a second usual white light when other craft approach.

[9] Black conical shape, apex downwards.

Table 4.11.7: **Additional signals made by craft navigating in inland waterways**

Craft's characteristics	Signal lights				Signal shapes				
	All-round white	All-round green	All-round red	Flashing	Ball	Cone	Diamond shape mark	Flag	Pennant
Craft not under command			1(2) [1]	-	2[1]	-		1[1]	-
Craft restricted in their ability to manoeuvre	1[2]		2[2]	-	2[2]	-	1[2]	-	-
Craft with a length of the hull less than $L_H < 20$ m permitted to carry more than 12 passengers	-	-	-	-	-	-	1[3]	-	-
A craft at anchor in the open water area and not connected to the shore	2[4]	-	-	-	1[4]	-	-	-	-

[1] At night – one red light which may be replaced by a white light on craft of less than 20 m in length, or two red lights disposed vertically at a distance of 1 m apart.
In the daytime – a red signal flag, or two black balls disposed vertically at a distance of 1 m apart.
[2] At night – three all-round lights disposed vertically at a distance of 1 m apart, the upper and the lower lights are red, the middle one is white.
In the daytime – two black balls and a diamond shape mark between them at a distance of at least 1 m apart.
[3] In the daytime – a double diamond shape mark.
[4] At night – two all-round lights visible from all sides: the first one – in the forward part of the craft at a height of at least 4 m; the second – in the aft part of the craft at a height of at least 2 m lower than the first one.
In the daytime – a black ball in the forward part of the craft disposed so that it can be seen from all sides.

Table 4.11.8: Supply standards for craft navigating in areas where IRPCS-72 apply

No	Types of craft	Signal lights						Signal shapes		
		Masthead	Side lights 1		Stern light	All-round		Ball	Cone	Diamond shape mark
			Green	Red		White	Red			
1	Self-propelled craft:									
1.1	Of 12 m in length and more;	1	1	1	1	1	2	3	One for a craft having sails	1[10]
1.2	Of less than 12 m in length;	1[2,3]	1[3]	1[3]	1[2]	1[4]	-	1		-
1.3	Of less than 7 m in length whose maximum speed does not exceed 7 knots	1[2]	1[5] 1[7]	1[5] 1[7]	1[2] 1[7]	1[6]	-	1[6]		-
3	Non-self-propelled craft	-	1[8]	1[8]	1[8]	1	2[9]	3[9]	-	1[10]

Note. As the requirements of the present Rules do not apply to tugs and pushers, the towing operations may be performed only in the daytime in conditions of good visibility.

[1]On craft of less than 20 m in length they may be combined in one lantern.

[2] Only for craft being towed if the length of the tow exceeds 200 m. May be replaced by two cones bases together.

[3] May be replaced by one white all-round light.

[4] If centerline fitting of the masthead light or all-round white light is not practicable, it may be displaced from fore and aft centerline of the craft, provided that the sidelights are combined in one lantern which shall be carried on the fore and aft centerline of the craft or located as nearly as

Practicable in the same fore and aft line as the masthead light or the all-round white light.

[5] May be used instead of the masthead light and stern light.

[6] Displayed if it is practicable.

[7] If a sailing craft proceeds under oars, the lights may be combined in one lantern.

[8] Required at anchor, only in the narrow passage, in the fairway, at the anchorage or in the vicinity of them, where other craft may normally navigate.

[9] Required if the craft is being towed alongside or by cable.

[10] Only for craft of 12 m in length and more

Table 4.11.9: Additional signals supply standards for craft navigating in areas where IRPCS-72 apply

No	Types of craft	Lights				Signal shapes	
		All-round			Flashing	Cone	Diamond shape mark
		White	Red	Green	Yellow		
1	Craft restricted in their ability to manoeuvre [1]	1	2	–	–	–	1
[1] Lights and shapes are not required for craft of less than 12 m in length.							

11.5.3. A craft of 20.0 m in length and more intended for navigation and navigating in water areas where the requirements of the European Code for Inland Waterways apply shall be supplied with one yellow ball – a signal shape which shall be used in case of its being towed by another craft.

11.6. .Pyrotechnic Signal Means Supply Standards

11.6.1. Rockets or shells throwing red stars, rocket parachute flares, hand flares showing a red light and smoke signals giving off orange-coloured smoke comprises Pyrotechnic signal means.

11.6.2. The navigational and technical requirements the pyrotechnic signal means shall comply with are specified in 11.2.5.

11.6.3. In accordance with the standards specified in Table 4.11.10, the supply of craft with pyrotechnic signal means shall be checked.

Table 4.11.10: Standards of craft's supply with pyrotechnic signal means

Design category	Quantity					
	Rocket parachute flare	Shell or sound signal rocket	Hand flare, red	Hand flare, white2	One-star rocket, green[2]	One-star rocket, Red [2]
R, R100 and R200 and **B**	6[3]	6	6[3]	6	6	6
R0	3	-	3	3	-	-
C1	3	-	3	3	-	-
C1	3	-	3	3	-	-
C3	-	--	-	-	-	-

[1] Craft engaged in international voyages shall be provided with 12 rocket parachute flares. Hand flares are also recommended.

[2] Recommended.

[3] Craft navigating in inland waterways may be provided with rocket parachute flares (3) and red hand flares (3).

[4] Craft of design categories **R, R100 and R200** and **B** are additionally supplied with two buoyant smoke floats. Besides, craft of design category **R** are additionally supplied with six rocket parachute flares.

The craft navigating at sea or in water storage reservoirs shall be supplied with pyrotechnic signal means.

11.6.4. For firing distress signal rockets, arrangement of a special shooting tube should be done in the craft rail or bulwark with a cut–in. The angle of the shooting tube setting to the horizontal shall be 60 −70°.

11.6.5. Permissions are given to replace distress signal parachute rockets with six-star red rockets except on craft engaged in international sea voyages.

11.7. Sound Signal Means Supply Standards

11.7.1. A whistle and a bell shall be supplied to all power-driven craft with a length of 12 m and more in order to make sound signals.

11.7.2. A means for making an effective sound signal by prolonged and short blasts shall be supplied to craft of less than 12 m in length navigating in areas to which the requirements of IRPCS-72 apply as well as inland navigation craft of 7 to 12 m in length.

11.7.3. A bell shall be fitted on manned non-self-propelled craft.

11.7.4. Automobile-type signal means may be used on sea-going craft and inland navigation craft of less than 12 m in length.

11.7.5. When, according to the provisions of these Rules and other applicable provisions, other sound signals than strokes of the bell are prescribed, such signals shall be given:

11.7.5.1. On board motor craft of 20 m in length and more as well as on all craft fitted with radars – by mechanical sound signal devices fitted at a height sufficient for the sound signals to propagate, without obstructions, ahead, and as far as possible, astern of the craft; the signal means shall meet the requirements of 11.2.6.5;

11.7.5.2. On board non-motor craft and on craft of less than 20 m in length whose machinery is not provided with a device for sounding signals by means of a trumpet, these signals shall comply with requirements of 11.2.6.5.1.1 and 11.2.6.5.1.2.

11.7.6. Sound signals of motor craft of 20 m in length and more shall be supplemented with light signals synchronized with them. These light signals shall be of yellow in colour and shall be

visible all over the horizon. Reference of this provision are not done to the light and radar sound signals that are sent by craft proceeding downstream, neither does it refer to bell strokes or continuous bell sounding.

11.7.7. If a craft proceeds in a convoy the prescribed signals shall be made, unless otherwise stated, only by the craft navigated by the head of the convoy.

11.7.8. Signals shall be given by a craft in distress by means of repeated bell strokes or by prolonged blasts. With the help of visual signals, these signals may be replaced or supplemented.

11.7.9. For providing the sound signal audibility, under normal operational conditions, the weighted level of sound pressure in the wheelhouse at the height of the helmsman's head shall not exceed 70 dB (A). Only after special consideration by the Register, a sound pressure level of 75 dB (A) can be permitted.

11.7.10. Continuous sounding of the bell shall last for about 4 sec. It can be substituted by a series of strokes of a metal object against another metal object of the same duration.

11.7.11. In addition to the requirements of these Rules, every craft of 20 m in length and more shall, when necessary, give signals as specified in 11.1.3. Supply standards for craft navigating in inland waterways

SECTION 12 EMERGENCY OUTFIT, SPARE PARTS AND TOOLS

Contents

12.1. General

12.1.1. The emergency outfit may include the items that are listed in Tables 4.12.1 and 4.12.2 available in the craft, but intended for other purposes, provided that these items have corresponding markings and their permanent storage places are situated above the bulkhead deck.

12.2. Items Required

12.2.1. Recommendations are made that an emergency outfit shall be provided to a craft of more than 12 m in length except those of design categories **C_1**, **C_2**, **C_3** and **D.** For craft of less than 12 m in length, the owner shall choose the emergency outfit. The recommended items required on craft are specified in Tables 4.12.1 and 4.12.2.

12.2.2. For glass-reinforced plastic craft, except those of design categories **C_1**, **C_2**, **C_3** and **D,** the outfit specified in Table 4.12.2 shall be provided, and in respect to each definite craft the quantity of this outfit shall be determined.

Table 4.12.1

No	Item, unit	Size	Quantity
1	Thrummed pad, pc	0.4 × 0.5 м	1
2	Set of rigging tools	As per Table 12.2.3	1
3	Set of fitter's tools	As per Table 12.2.3	1
4	Pine plugs for craft with side scuttles, pc	Side scuttle diameter	2[1]
5	Pine plugs, pc	10 × 30 × 150 mm	2
6	Unbleached canvas, m^2		2
7	Tarred tow, kg		10[3]
8	Hexagonal-head bolt, pc	M16×260 mm	2
9	Hexagonal nut, pc	M16	4
10	Washer for nut, pc	M16	8
11	Cement (quick-setting), kg		100[2]
12	Sand, natural, kg		100[4]
13	Accelerator for concrete setting, kg		5[5]
14	Minium, kg		5
15	Carpenter's axe, pc		1
16	Hack-saw, pc	600 mm in length	1
17	Bucket with a line, pc		1
18	Lantern of explosion-proof type, pc		1
19	Stop of telescopic type, pc		1

1 For each standard size.
2 For craft of less than 12 m in length, the required quantity is 50 kg;
3 For craft of less than 12 m in length, the required quantity is 5 kg;
4 For craft of less than 12 m in length, the required quantity is 50 kg;
5 For craft of less than 12 m in length, the required quantity is 2.5 kg.

Table 4.12.2

No	Item
1	Glass fabric
2	Glass roving
3	Resin binder with hardener

12.2.3. Recommendations are made that the sets of rigging and fitter's tools that are specified in Table 4.12.1 shall include the items according to Table 4.12.3.

Table 4.12.3

No	Item	Size	Quantity per set	
			Rigging	Fitter's
1	Tape measure	2000 mm long	1	-
2	Bench hammer	0.5 kg	1	1
3	Sledge hammer	3.0 kg	-	1
4	Rigger's mallet	–	1	-
5	Puncher (dumb iron)	–	1	-
6	Chisel	20×200 mm	1	1
7	Marline spike	200 mm	1	-
8	Carpenter's chisel	20 mm	1	-
9	Screw auger	Ø18 mm	1	-
10	Tongs	200 mm	1	-
11	Hollow punch	Ø18 mm	-	1
12	Hollow punch	Ø25 mm	-	1
13	Triangular file	300 mm	--	1
14	Half-round file	300 mm	-	1
15	Multi-purpose tongs	200 mm	--	1
16	Screw driver	b = 10 mm	-	1
17	Adjustable wrench	Jaw width up to 36 mm	-	1
18	Wrench	Jaw width of 24 mm	-	1
19	Rigger's knife	-	1	-

20	Hack-saw frame	-	-	1
21	Hack-saw blade	-	-	6
22	Kit-bag	-	1	1
Note. For glass-reinforced plastic craft, the outfit items specified in 3, 8 – 10, 12 – 15, 19, 20 and 22 are not required.				

12.2.4. For craft of design categories **R, R100 and R200** and **B,** an emergency fresh water supply of at least 9 litres per person shall be provided in container(s) which are specially intended for this purpose.

12.2.5. For power-driven craft of design categories **R0**, $\mathbf{C_1}$, $\mathbf{C_2}$, $\mathbf{C_3}$ and **D,** with a hull length of less than 6 m, a set of oars is required.

12.3. Storage of Emergency Outfit

12.3.1. At least in two emergency stations the emergency outfit shall be stored, one of which shall be situated in the machinery space. Emergency stations may be special spaces, boxes or places allocated on the deck or in spaces. In the emergency station of the machinery space the outfit necessary for carrying out the emergency operations inside the space shall be stored; the rest of the emergency outfit shall generally be stored in the emergency stations located above the bulkhead deck. Provided the condition that free access to this station is provided at all times, it is allowed to locate the emergency station below the bulkhead deck.

12.3.2. It is allowed to store the emergency outfit only in one emergency station on craft where it is impracticable to comply with the requirement of 12.3.1.

12.3.3. In front of the emergency station, a free passage at least 0.6 m wide shall be provided. The passages to the emergency stations shall be as straight and short as possible.

12.4. Marking

12.4.1. Items of the emergency outfit and cases for their storage shall be painted blue either entirely or in a stripe. In order to indicate the name of the material, weight and warranted storage period, the cases for emergency equipment storage shall have a distinct inscription.

12.4.2. A distinct inscriptions: “Emergency Station” shall be provided to the emergency stations

12.5. Spare Parts for Craft’s Arrangements

Spare parts shall be provided to every craft that is required for reliable operation of craft’s arrangements. Given in Table 4.12.4 is the list of spare parts. The Table specifies only the nomenclature of the parts, while the determination of their standard sizes and quantity are done by the requirements of the corresponding Sections of the present Rules.

Table 4.12.4: Spare parts for craft's arrangements

No	Items	Design categories		
		R, R100 and R200 and **B**	**R0**	**C_1**
1.	**Anchor arrangement**			
1.1	Spare end shackle	+	−	−
1.2	Spare connecting shackle	+	−	−
2	**Rudder and steering gear**			
2.1	Spare rudder stock bearing bush	+	+	−
2.2	Spare rudder pintle bearing bush	+	+	−
2.3	Emergency tiller	+	+	+
2.4	A set of steering tackle1	+	+	+
1 For craft with steering gear fed from a power source. In this case item 2.3 is not required.				

12.6. Operating Instructions

It is recommended to have operation and maintenance instructions for the craft's mechanisms and auxiliary equipment.

SECTION 13 RECOMMENDATIONS FOR STEER-ABILITY STANDARDIZATION

Contents

13.1. General

13.1.1. Definitions and explanations

The following definitions and explanations have been adopted for the purpose of these Recommendations:

Middle point of the craft – a point in the center-line plane of the craft situated in the middle of the waterline of flotation.

Craft's speed *v* – for water-displacement power- driven craft a speed equal to at least 90 % of the craft's attainable speed or a speed when the power of the craft's engines is at least 85 per cent of the engine rated power.

Craft's maneuvering speed v_m − for craft proceeding in either transient or gliding operating condition and also for high-speed craft – a speed at which safe maneuvering of the craft is provided in a restricted water area. This speed, as a rule, corresponds to a displacement condition.

Turning circle – a manoeuvre either to starboard or port when the wheel is put 35° or at a maximum angle of turn allowable at the craft's speed during the trials

Stable turning circle – a turning circle manoeuvre when the kinematic parameters of the craft's motion can be considered as unchangeable with time

Stopping way − a distance passed by the middle point of the craft in the direction of the initial craft's course from the position at which the engine was worked full astern to the position where the craft stopped in respect to the water.

Active means of craft's steering – a special unit capable of producing thrust or traction force a tan angle to the center line plane of the craft when the main engine is not functioning and/ or the craft is not making her way through water.

Tack – the headings of a sailing craft with the wind kept on one side of the craft.

Turn of a sailing craft – the tack change.

Tacking – the turn in which the sailing craft's head is brought to the wind and across it so as to bring the wind on the opposite side of the craft.

Gybing – the turn in which the sailing craft is brought onto the other tack by bringing the wind around the stern.

13.1.2. General requirements

The methods and design parameters that are specified in 2.2 and 3.1 contain general recommendations without considering the craft's particulars, and can only be applied for determining the craft's general architecture at the first stages of design developing. For the

purpose of the present Rules, the approach to the steerability standardization comprises the following provisions:

13.1.2.1. Recommendations are made to assess that the rudder blade area and the effectiveness of the rudder system at the design stage;

13.1.2.2. Checking of the requirements to the maneuvering elements of the craft – turning circle, stopping way, course-keeping stability and steerability of sailing craft – are done during the performance trials of the prototype craft.

13.1.2.3. The decision about the craft's compliance with the requirements to steerability is taken on the basis of the trials results.

13.2. Steerability of power-driven craft

13.2.1 Diameter of stable turning circle

13.2.1.1. Applications of the requirements of this Chapter are done to craft equipped with either permanently fixed or outboard engines. Thrusters and similar active means of craft's steering are regarded as auxiliary and are not to be considered when compliance with the requirements of this Section is decided upon.

13.2.1.2. Checking of the actual characteristics of the turning circle is done during the craft's trials.

13.2.1.3. For water-displacement craft (operating at a rate of speed $F_r < 0,5$) the diameter of the stable turning circle to each side shall be:

$D_C \leq 4 * L_{WL}$,

Where DC − is the stable turning circle diameter, m;

L_{WL} − is the length of the craft on waterline, when the craft does not move, m.

13.2.1.4. For high-speed craft in a transient ($1 < Fr_\Delta < 3$) or gliding ($Fr_\Delta > 3$) operating conditions the diameter of the stable turning circle at a speed of manoeuvring shall be:

$D_C \leq 4 * L_{WL}$ − for gliding and half-gliding craft;

$D_C \leq 6 * L_{WL}$ − for hydrofoil craft, air-cushion skeg craft and for craft with underwater skegs

13.2.1.5. Specification of the speed of manoeuvring and safe speeds of high-speed craft shall be done in the Manual for the Owner of the Craft.

13.2.2 Rudder area

13.2.2.1. Applications of the requirements to the rudder area are done to craft equipped with permanently fixed engines and propellers. Applications of these requirements are not done to craft with outboard engines, water-jet installations, box-type (nozzle) rudders and other similar means of steering.

13.2.2.2. Determination of the minimum required rudder area is done according to the following formula:

$$A_{Rmin} = \frac{0.02\, A_{cl} k_{LBd}}{k_V k_t k_N k_{AR} k_C k_A} \quad (2.2.2.1)$$

Where A_{Rmin} − is the minimum rudder area, m^2; for craft with two rudders, the A_R is the summated area of the rudders. If the rudder has a skeg, the area of the rudder A_R is calculated similarly to the value A_0 determined in Chapter 2.2.

A_{cl} − is the area of the submerged part of the centre-line plane, including the keel and deadwood, but excluding centerboards, bilge boards, brackets and protruding parts, m^2;

k_{LBd} – is the coefficient taking into consideration the craft's basic dimensions calculated according to the formula:

$k_{LBd} = \delta B/d_A$, (2.2.2-2) where B − is the breadth of the craft;

d_A – is the averaged draft of the area of the submerged part of craft's centre-line plane (A_{cl}). It is calculated as the doubled distance from the construction waterline to the A_{cl} area of neutral inertia axis parallel to the construction waterline. For craft with a simple shape of the submerged part, d_A can be taken as equal to the craft's mid length draught;

δ − is the block coefficient of the craft;

k_V – is the coefficient considering the location of the rudder and propeller:

k_V = 1.2 for rudders installed behind the screw disk;

k_V = 1.0 for other location of the rudders;

k_N – is the coefficient of the quantity of rudders:

k_N = 1.0 if one rudder is installed;

k_N = 0.7 if two rudders are installed on each side of the craft;

k_t – is the coefficient taking into consideration the rudder type and the place where it is installed:

k_t = 1.0 for a rudder installed under the craft's bottom;

k_t = 0.7 for transom hanging rudder;

k_t = 0.5 for transom hanging rudder fixed behind the stern frame or skeg;

k_{AR} – is the height-breadth ratio of the rudder:

k_{AR} = 1.0 for a rudder with $\frac{h_R^2}{AR} \geq 1.5$;

kAR = $\left(0.5 \cdot \frac{h_r^2}{A_R} + 0.25\right)$ for rudders with $\frac{h_r^2}{A_r} < 1.5$;

h_R – is the average height of the rudder, m;

k_A – is the coefficient considering the relative location of the geometric centre of the centerline plane submerged part area in respect to the craft's length:

$k_A = \frac{2*X_a+L_{WL}}{L_{WL}}$;

X_A – is the distance, m, from the geometric centre of the centerline plane submerged part area to the mid craft section of the craft, "+" means that the value is positive in the direction to the fore part of the craft;

k_C – is the coefficient of the relative location of the centre of buoyancy in respect to the craft's length: $k_c = \frac{2*X_c+L_{WL}}{L_{WL}}$;

X_C – is the distance, m, from the centre of buoyancy to the mid craft section of the craft, "+" means that the value is positive in the direction to the fore part of the craft.

13.2.2.3. In comparison with the required area the rudder area may be reduced if it is proved to the Register by calculations or experiments that the requirements specified in 2.1 are complied with.

13.2.3 Stopping Way of The Craft

The stopping way of the craft shall not exceed 15 L_{WL}.

13.2.4 Course-keeping stability

The ability of the craft to steer the direct course steadily shall be demonstrated by the trials, without putting the helm from starboard to port to compensate for the craft's yawing.

13.3. Steerability of sailing craft

13.3.1. Criterion for Rudder Effectiveness

13.3.1.1. Applications of the requirements to the criterion for the rudder effectiveness are done to sailing craft of more than L_H > 6 m.

13.3.1.2. The criterion for the sailing craft rudder effectiveness

$E_R = k_N k_L k_{AR} \frac{l_R A_R}{z_{SC} S\,A} \cdot 10^3$,

Where k_N – is the coefficient of the quantity of rudders;

k_N = 1.0 − if one rudder is installed;

k_N = 0.6 − if two rudders are installed on each side of the craft;

k_L – is the coefficient of the rudder type and location:

k_L = 1.0 − for a rudder fixed under the bottom as a console or with a skeg;

k_L = 0.7 − for transom hanging rudder;

k_L = 0.5 − for a rudder hanging on the stern frame;

k_{AR} – is the height-breadth ratio of rudder;

k_{AR} = 1,0 for a rudder with $\frac{h_R^2}{AR} \geq 1.5$; $k_{AR} = \left(0.5 * \frac{h_R^2}{A_R} + 0.25\right)$ for rudders with the height-breadth ratio of $\frac{h_r^2}{A_r} < 1.5$;

l_R – is the distance from the geometrical centre of the rudder to the middle point of the craft, m;

h_R – is the average height of the rudder, m;

A_R – is the rudder area, m^2; for craft with two rudders, A_R is the summated area of the rudders.

If the rudder has a skeg, the area of the rudder A_R is calculated similarly to the value A_0 determined in Chapter 2.2 of this Part of the Rules;

Z_{SC} – is the height of the geometric centre of sails above the construction waterline, m;

SA – the area of main sails, m^2.

13.3.1.3. The E_R value determined according to formula (3.1.2) shall not be less than the E_{Rmin} minimum value determined as:

$E_{Rmin} = \left(\frac{60}{L_{WL}}\right) + 1.5$. (3.1.3)

13.3.2. Steerability of sailing craft with permanently installed engines

13.3.2.1. The minimum craft's rudder area is taken as the largest of the areas that are calculated according to 2.2 for a motor craft and according to 3.1 for a sailing craft.

13.3.2.2. For a motor-sailing or a sailing-motor craft when it proceeds under engine the requirements to turning circle elements are the same as for motor craft specified in 2.1.

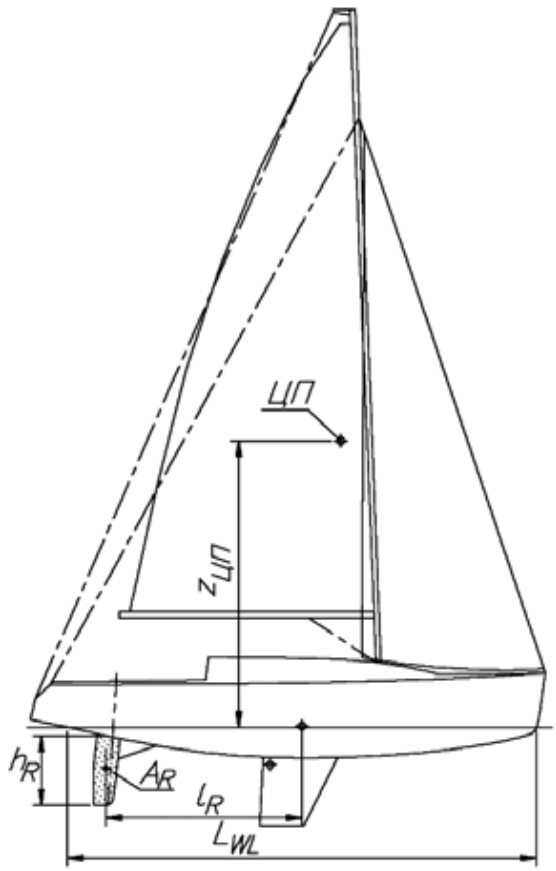

Figure 4.13.1: Sailing craft elements

CHAPTER 5 MACHINERY INSTALLATION, SYSTEMS AND PIPING

CONTENTS

SECTION 1 GENERAL

Contents

1.1. Scope

1.1.1. The application of the requirements of this Chapter of the Rules shall be done to machinery installations, machinery, propellers, systems and piping used in the small craft.

1.1.2. The application of the requirements of this Chapter is defined in relevant Sections: “Machinery Installations”, “Machinery” and “Systems and Piping”.

1.2. Definitions

In the General Regulations, definitions and explanations relating to general terminology of the Rules are given. The following definitions and explanations have been adopted for the purpose of this Chapter of the Rules:

1.2.1. ***Fittings*** define stop, regulating and other devices that are intended for distribution control and regulation of consumption and other parameters of the conveyed medium by means of entire or partial closing of flow section.

1.2.2. ***Auxiliary machinery*** defines machinery necessary for operation of main machinery, supply of the craft with electric power and other kinds of energy, as well as functioning of the systems and arrangements subject to supervision of INTLREG.

1.2.3. ***Auxiliary active means of the craft’s steering*** defines a propulsion and steering unit ensuring propulsion and steering of a craft at low speed or steering of a craft at zero speed when the craft is equipped with main means of propulsion and steering, and is used either in combination with the latter or when the main means of propulsion and steering are inoperative.

1.2.4. ***Exit*** defines an opening in bulkhead or deck which are provided with closing means and are intended for the passage of persons.

1.2.5. ***Means of escape*** defines an escape route leading from the lowest part of the machinery space floor plates to the exit from that space.

1.2.6. ***Main engines*** define the machinery intended for driving propellers.

1.2.7. ***Main machinery*** defines machinery being part of the propulsion plant.

1.2.8. ***Main active means of the craft‘s steering*** defines a propulsion and steering unit being part of the propulsion plant.

1.2.9. ***Outboard engines*** define main engines installed on the transom of small Craft.

1.2.10. ***Remote control*** defines starting and stopping of the machinery as well as changing of the speed and direction of rotation from a remote position.

1.2.11. ***Engine room*** defines a machinery space intended for the main engines, and in case of craft with electric propulsion plants, the main generators.

1.2.12. ***Machinery spaces*** define spaces containing propulsion machinery, boilers, oil fuel units, steam and internal combustion engines, generators and major electrical machinery, oil filling stations, air conditioning and ventilation machinery, refrigerating machinery, stabilizing machinery or other similar machinery, including the trunks to the space.

1.2.13. ***Local control station*** defines a control station fitted with controls, indicators, means of communication (if necessary) intended for control, located in proximity to, or directly on, the engine.

1.2.14. ***Torsional vibration stresses*** define stresses resulting from the alternating torque, which is superimposed on the mean torque.

1.2.15. ***Equipment*** defines all types of heat exchangers, filters, tanks and other arrangements ensuring normal operation of the machinery installation.

1.2.16. ***Pipeline fire resistance*** defines the ability of pipeline to maintain strength and functional properties within the set period of time at flame exposure.

1.2.17. ***Plastic materials*** define thermoplastic (thermoplasts) and thermosetting (thermosets) materials with or without reinforcement, such as polyvinylchloride (PVC) and fiber reinforced plastic (FRP).

1.2.18. ***Propulsion plant*** defines the totality of machinery and arrangements intended for generating, converting and transmitting power ensuring propulsion of the craft at all specified rates of speed and comprising propellers, shafting, main gearing and main engines.

1.2.19. ***Rated power*** defines the maximum continuous (not time-limited) power adopted in calculations under the Rules and stated in documents issued by INTLREG.

1.2.20. ***Rated speed*** defines the speed corresponding to the rated power.

1.2.21. ***System*** defines a combination of pipelines, machinery, apparatus, devices, appliances and reservoirs intended for performance of certain functions providing craft's operation.

1.2.22. ***Inboard engines*** define main engines installed permanently in the engine room or in a special compartment or in a specially allocated space on deck.

1.2.23. ***Active means of the craft's steering (AMCS)*** define special propulsion and steering units and any combination of them or with the main propulsion devices, capable of producing thrust or traction force both at a fixed angle to the center line plane of the craft and at a variable angle, either under all running conditions or part thereof, including low and zero speed.

The active means of the craft's steering contain steerable propellers including tiltable and retractable units, active rudders, vertical-axis propellers, water-jets, propellers in transverse channels (transverse thrust units), separate steering nozzles and other devices of similar purpose, special propulsion and steering units and outboard engines of small craft and any

combination of them or with the main propulsion devices, capable of producing thrust or traction force both at a fixed angle to the center line plane of the craft and at a variable angle, either under all running conditions or part thereof, including low and zero speed.

1.2.24. ***Pipeline*** defines a combination of pipes, fittings, formed components, pipe joints, any internal and external linings, insulation coatings, fastening elements and components for protection of pipes intended for conveying of liquid, gaseous and compound media, as well as for transmission of pressure and sound waves.

1.2.25. ***Pipelines formed components*** define bends, T-pieces, bulkhead and deck penetrations and other elements of pipelines, intended for pipeline branching, changing of conveying medium direction and ensuring of hull structure tightness.

1.2.26. ***Navigating bridge*** defines a space or part thereof, open area or an area enclosed by detachable structures, from which navigation and control of the craft is normally exercised and where controls of the main steering gear (steering gear control system), remote controls of the main and auxiliary engines, CP-propellers, main and auxiliary active means of the craft's steering, instruments, alarm devices and means of communication are located.

SECTION 2 MACHINERY INSTALLATIONS

Contents

2.1. Scope

2.1.1. The application of the requirements of this Section of the Rules shall be done to craft machinery installations subdivided in accordance with [2.1.2], equipment of machinery spaces, shafting lines, propellers and spare parts of motor, motor-sailing, sailing-motor and self-propelled craft, as well as non-self-propelled and berth-connected craft fitted up with machinery and systems as specified in General Regulation of Chapter-1, Sec-1.

2.1.2. The machinery installations of the small craft are subdivided:

a) by the main engines location:

- in exposed machinery area (cockpit, machinery compartment);
- in enclosed machinery space;
- on craft's transom;
- on weather deck or in a pod (with aerial propeller).

b) by the type of fuel oil used by the main engines:

- diesel engines with flash burning fuel oils having a flash point (closed cup test) above 60°C (140°F). Engines burning fuel oil of a lesser flash point are subject to special consideration. In general, for vessels classed for services in specific geographical areas, fuel oil with a flash point of 60°C (140°F) or below, but not less than 43°C (110°F), may only be used. The climatic conditions in these areas are to preclude the ambient temperature of spaces where such fuel oil is stored from rising to within 10°C (18°F) below its flash point.

  Engines driving emergency generators may use fuel oil with a flash point of 60°C (140°F) or below, but not less than 43°C (110°F).

  In each case, use of diesel oil with flash point below 43 °C is subject to special consideration by INTLREG;

- carburetor (petrol) engines.

2.1.3. Those craft which are intended for operation in offshore and sheltered areas of navigation, design categories **R, RC,R20,R100,R200, R300,** as mentioned in Part 1 Ch1 Sec 4[4.7], the internal combustion engines may be used as main engines which are serially manufactured for automobile industry and have the Manufacturer's certificate.

2.1.4. Those craft which are intended for operation in open sea, updating of such an engine and testing of it shall be carried out under the INTLREG's technical supervision, in accordance with the technical documentation and test program being part of the craft's design documentation.

2.1.5. Those craft which are intended for operation in sheltered areas of navigation as mentioned in Part 1 Ch1 Sec 4, use of the main engines and propulsion systems (reduction gear – shafting line – propeller) manufactured without INTLREG technical supervision, and if their power output does not exceed 25 kW is subject to special consideration by INTLREG.

2.2. Technical Supervision

2.2.1. The following components and items, including the approval of technical documentation according to Chapter-1, [3.8] are subject to INTLREG technical supervision:

a) Shafting as assembled, including propeller shafts, shaft bearings, thrust blocks and sterntube bearings, sterntube seals as assembled;

b) Propellers, including vertical-axis propellers and water-jets, aerial propellers, steerable propellers, outboard engines, transverse thrusters, pitch control units and control systems of propellers.

2.2.2. The assembling of the machinery space equipment and testing of the following components of the machinery installation shall be done subject to INTLREG technical supervision:

a) main machinery;

b) auxiliary machinery listed in [3.1.1.3] to [3.1.1.13];

c) heat exchangers and pressure vessels;

d) shafting and propellers;

e) control, monitoring and alarm systems of the machinery installation;

f) active means of the craft's steering.

2.2.3. In accordance with the program approved by INTLREG, the machinery installation shall be tested after assembling of machinery, equipment, systems and piping arrangements on board the craft.

2.3. Main Engine

2.3.1. In each case, the installation of the main engines having total power output in excess of the requirements of [2.3.2] to [2.3.4], shall be done subject to special consideration by INTLREG.

2.3.2. In accordance with [2.3.3], the maximum allowable power output of the main engines being part of the propulsion plant installed on the transom of a Small Craft having hull length equal to and below 8.0 m shall require to be determined, depending on:

a) factor λ calculated by the formula:

$$\lambda = L_H \cdot B_T$$

Where

L_H = the craft hull length, m;

B_T = the transom width, m,

b) structural design of the propulsion plant:

- Ensuring active steering of the craft (see definition of the “Active Means of the Craft’s Steering”, given in [1.2]);
- Not ensuring active steering of the craft.

c) Dead-rise angle β are required to be determined.

2.3.3. In accordance with (a) and (b), the maximum allowable power output of the propulsion plant installed on the transom of a Small Craft having hull length equal to and below 8.0 m shall require to be determined:

a) factor λ ≤ 5.1 according to the graph shown in Fig. 5.2.1 and in this case:

- the upper line of the graph is used at the dead-rise angle

  β ≥ 5.0°;

- the lower line of the graph is used at the dead-rise angle

  β < 5.0°;

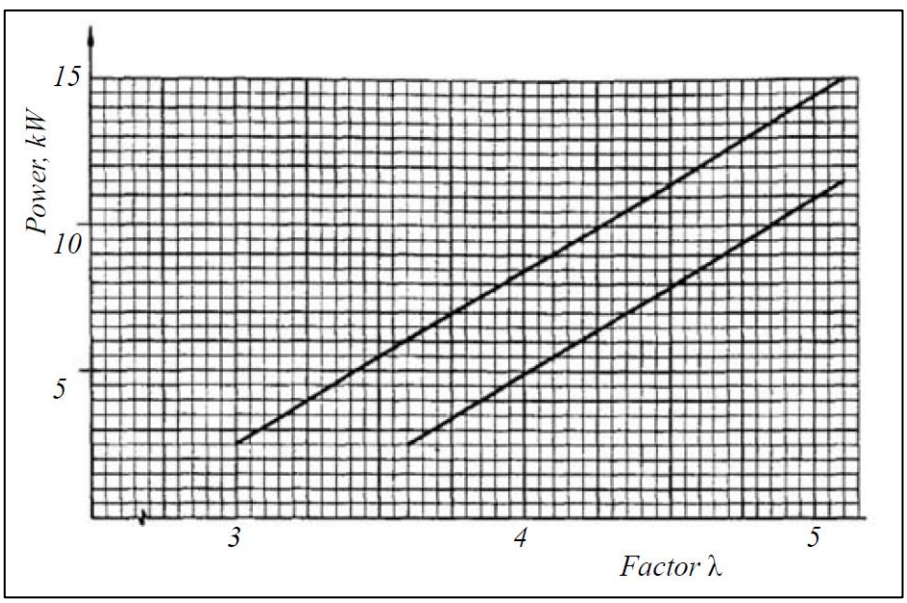

Figure 5.2.1.

b) using the formulae as given below at factor λ > 5.1

- for a propulsion plant, kW, ensuring active steering of the craft, regardless of the value of the dead-rise angle:

  $N_e = 16\,\lambda - 67$

- for a propulsion plant, kW, not ensuring active steering of the craft, at the dead-rise angle β ≥ 5.0°:

  $N_e = 6.4\,\lambda - 19$

- for a propulsion plant, kW, not ensuring active steering of the craft, at the deadrise angle β < 5.0°:

  $N_e = 4.2\,\lambda - 11$

2.3.4. Depending on the coefficient K, from a combined graph (Figure . 5.2.1), it is advisable to determine the maximum allowable power of the outboard engines of craft having the overall length of the hull equal to and below 5.5 m, having regard to the following:

a) for motor boats with remote control and transom height more than 510 mm at K ≥ 52, by graph N1;

b) for motor boats with transom height less than 510 mm, by graph N2;

c) for all motor boat with rounded chine, by graph N3;

d) for motor boats mentioned in (a) and (b) at K < 52, by graph N4;

e) the maximum allowable power output of the outboard engines in all cases shall not be less than 100 kW.

Depending on the transom width or hull length, or by the formula given below, coefficient *K* is determined from the combined graph as shown in Fig. 5.2.2:

$K = 10.6\ \lambda$

Where λ = see [2.3.2(a)].

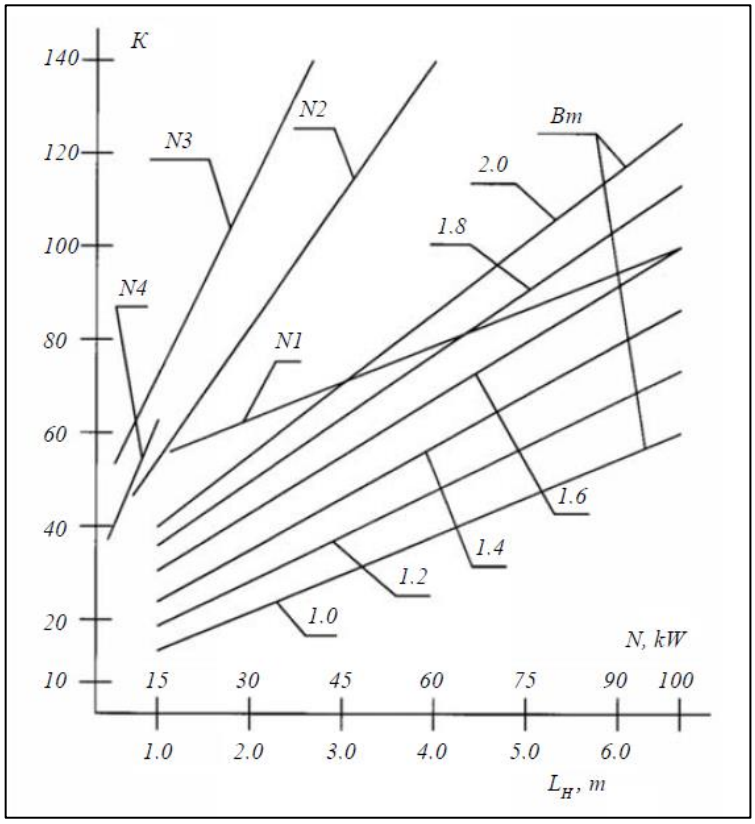

Figure 5.2.2: The maximum allowable power output of the outboard engines of craft with the overall hull length equal to and below 5.5 m.

2.4. Control Devices and Stations - Means of Communication

2.4.1. The main and auxiliary machinery which are essential for the propulsion, control and safety of the craft are required to be provided with effective means for their operation and control.

2.4.2. The main engines of craft of design categories R, R100, R200,R300 **B** and **C** are required to be fitted with pneumatic or electric starting system.

The electrically – started engines are required to be fitted with attached generators and provided with a device for automatic recharging the starting accumulator batteries.

2.4.3. The main engines of craft of design categories **C1, C2, C3** and **D** are required to be fitted both with electrical starting system and with a device for manual starting by means of a starting handle or a starter cord.

2.4.4. In case where in addition to electric starting, manual drive of the engine is also provided, such manual drive shall be automatically disengaged when the electric drive is actuated, and to preclude simultaneous operation of the two drives, an interlocking system shall be provided.

In order to provide the safety of starting, the starting handle of the manual drive and starter cord shall be made accordingly.

To ensure self-disconnection of the cord from the engine, the starter cord shall be provided with a device.

To prevent translational travel in the direction opposite to the applied force necessary for engine starting, the starting handle shall be provided with a device.

2.4.5. Starting and reversing arrangements are required to be so designed and placed such that each engine can be started or reversed by one operator. In this case, the force applied to one handle shall not exceed 160 N.

With the help of arrows and relevant inscriptions, the proper working direction of control handles and hand wheels shall be clearly indicated.

The setting of maneuvering handles of the main machinery from, or to the right of, the operator, or turning the hand wheel clockwise, at control stations on the navigating bridge, shall correspond to the ahead speed direction of the craft.

To eliminate the possibility of spontaneous changing the positions as prescribed, the control arrangements are required to be designed accordingly.

A device is required to be provided with the outboard engines which excludes starting of the engine in engagement with the propeller, except when:

- Engine is fitted with a limiter which provides a thrust up to 500 N at the time of starting;
- Static thrust provided by the engine does not exceed 500 N.

2.4.6. The duration of reversing (a period of time from the reversing of a steering control to the beginning of the propeller operation with a thrust opposite in direction) shall not exceed:

a) for internal combustion engines of power output 55 kW and above:
   - 25 s at full speed;
   - 15 s at low speed;

b) for internal combustion engines of power output less than 55 kW:
   - 10 s at full speed;
   - 5 s at low speed.

2.4.7. As a rule, the inboard main engines and outboard engines of power output more than 15 kW, shall be provided with remote control or remote automated control system.

The requirements of Chapter-6, Sec-2 shall be met by the remote automated control system.

The main engines of power output less than 25 kW is required to be installed in exposed machinery spaces or on transom (as given in [2.1.2.1]) of craft of design categories **C2, C3** may be devoid of the remote control or remote automated control system.

2.4.8. The main machinery remote automated control system operable from the navigating bridge is required to be designed in such a way such that it provides an alarm in the event of failure.

As far as possible, unless control is transferred to a local station the prescribed propeller speed and thrust direction is required to be remain unchanged. Among other factors, the power of main engines or changing the direction of propeller rotation shall not be substantially affected by the loss of power supply (electric, pneumatic or hydraulic power).

The activation of the alarm to warn regarding the remote control failure need not be provided in case of remote control with the use of mechanical linkage.

2.4.9. With any type of remote control, the bridge control stations of main machinery and propellers are required to be equipped with:

a) Indicators of:

- Propeller shaft rotation speed and direction if a fixed pitch propeller is installed;
- Propeller shaft speed and blade position if a controllable pitch propeller is installed;
- Main engine speed if a disengaging clutch is provided;

b) Controls for the operation of main engines and propellers. The navigating bridge may be equipped with means for only remote control of propellers for installations comprising cp-propellers, vertical-axis and similar type propellers;

c) Indicating means to show from which station the control is exercised;

d) Indicating means to show that the main engines and remote control systems are ready for operation;

e) Main machinery emergency stop device, independent of the control system. It is permissible that emergency disengagement of disengaging clutches only is effected from the navigating bridge, if disengaging clutches are provided for disconnection of main machinery from propellers;

f) Means of communication in accordance with [2.4.17];

g) Indication for the override operation, alarm for activation of protection devices and the emergency stop;

h) Device to override the automatic protection covering full range of parameters, except those parameters which being exceeded, may result in serious damage, complete failure or explosion;

i) Alarm for low starting air pressure, set at the level permitting three starting attempts of main engines duly prepared for operation;

j) Alarm for minimum oil pressure in pitch control system, overload alarm where the main engines operates with a CP-propeller.

2.4.10. In case where outboard engines and main engines permanently installed in exposed machinery spaces are remotely controlled with the use of mechanical linkage, control stations on the navigating bridge are required to be equipped with:

a) Controls for the operation of main engines and propellers;

b) Indicators of:

- Propeller shaft or main engine speed;
- Propeller shaft speed and blade positions if cp-propeller is installed;

c) Indicating means to show that the main engines and remote control systems are ready for operation (recommendation);

d) Main engine emergency stop device. It is permissible that emergency disengagement of disengaging clutches only is affected, if these clutches are provided for disconnection of main engines from propellers.

2.4.11. The emergency stop devices of main engines and the overrides of protection arrangements shall be so constructed as to forbid inadvertent operation thereof.

2.4.12. The provision is also required to be made for local control of main engines and propellers, with a remote control system in use.

The local controls may be dispensed with, where mechanical linkage is fitted for remote control.

As stated in [3.2.3], the local control station of main engines is required to be equipped with instruments.

2.4.13. Only from one control station, the remote control of main engines and propellers shall be performed and the transfer of control between the navigating bridge and engine room shall be possible only from the engine room.

2.4.14. By means of a single control element per propeller, the main engines shall be remotely controlled from the wheelhouse with all the operating modes automatically executed, including, if appropriate, the means preventing overloading and continuous running of the main engines within the restricted rotation speed ranges. Systems with two control elements may be used in installations with CP-propellers.

2.4.15. The sequence of the main engine operation modes assigned from the navigating bridge, including reversal from the full ahead speed, are required to be automatically controlled with the time intervals admissible for main engines, in case of emergency. The modes assigned are required to be indicated at the local control stations of the main engines.

2.4.16. All the indicating instruments shall be checked by competent bodies as recognized by the INTLREG with the exception of liquid-filled thermometers.

2.4.17. **Means of communication.**

2.4.17.1. For crafts which intend to operate in the regions denoted by R, RC, R100, R200, R300 at least two independent means are required to be provided for communicating orders from the navigating bridge to the position in the machinery space or in the control station, from which the speed and direction of thrust of the propellers are normally controlled, where local control station of main machinery is available.

One of these means shall provide visible indication of orders and responses both in the machinery space and on the navigating bridge and which is fitted with a sound signal clearly audible in any part of the machinery space while the machinery is at work, and distinct in tone from all other signals in that machinery space.

2.4.17.2. For controlling the speed and direction of thrust of propellers, adequate means shall be provided for communicating orders from the navigating bridge to the position in the machinery space or in the control station, for crafts which are intended, where local control station of main machinery is available. Means of visible indication of orders and responses both in the machinery space and on the navigating bridge shall also be fitted along with a means for sound signal clearly audible in any part of the machinery space while the machinery is at work, and distinct in tone from all other signals in that machinery space.

2.5. Machinery Spaces

2.5.1. **Enclosed machinery spaces**

2.5.1.1. In accordance with the requirements of Chapter-7, a watertight bulkhead shall isolate the machinery space from all other adjacent compartments.

2.5.1.2. In the machinery space, the main and auxiliary machinery is required to be arranged in such a way so that it provides free passageways from their control stations and servicing flats to the escape routes from these spaces. The width of passageways shall not be less than 500 mm over the whole length.

2.5.1.3. The width of exit doors and the width of ladders serving as escape routes shall not be less than 500 mm.

2.5.1.4. From machinery spaces, the escape routes shall lead to such places which provide ready access to the exposed deck.

Workshops, spaces for fuel oil units, oil equipment testing, boilers, etc., which are enclosed within machinery spaces may have exits into these spaces.

In addition to entrances to the engine room, the engine control room and the main switchboard space whish are enclosed within the engine room shall have their own independent escape routes.

In case of small engine room (not more than 35 m^2), or where exits from these spaces are located close (not farther than 5 m) to the engine room exit, on agreement with INTLREG an independent escape route from the engine control room may be omitted.

Escape routes are required to be located on opposite sides, if two adjacent machinery spaces communicate through doors and each of them has only one escape route through the casing.

The second escape route is not required:

a) From machinery spaces of not more than 25 m^2 in area if the available escape route does not lead to the adjacent machinery or accommodation space;

b) From enclosed engine control rooms where main switchboards are located;

c) From auxiliary spaces enclosed within the machinery space provided with two escape routes;

d) From spaces which contain no oil-fired machinery.

2.5.1.5. From machinery spaces, all the doors as well as the covers of companionways and skylights which may serve as means of escape, are required to be capable of being opened and closed both from inside and outside. The covers of companionways and skylights shall bear clear inscription prohibiting stowage of any load on them.

2.5.1.6. In accordance with the requirements of [4.9], ventilation of enclosed machinery spaces shall be done.

2.5.1.7. The moving parts of machinery and equipment shall be guarded.

2.5.1.8. The detachable plating (floor ceiling) in machinery spaces are required to be made of ribbed metal. Plates shall be reliably installed on special frames or on the hull framing and provided with securing devices to prevent them from displacement out from their standard positions in case of heavy heel and trim of the craft and have non-slip surface.

All the moving parts of machinery and drives which may constitute a threat to the attending personnel are required to be protected by handrails and guards.

2.5.2. **Exposed machinery spaces (cockpits, motor compartments).**

2.5.2.1. In craft, where the hull is made of non-combustible materials, the boundary structures of the machinery space where internal combustion engine is permanently installed are required to be protected by non-combustible heat-insulating material and sheet steel.

2.5.2.2. Floors installed in front of, or behind, the engine are required to be watertight and form a collecting tray. The upper edge of the watertight floors enclosing the machinery space (engine) shall be by 150 mm above the floor plating level of the engine room abutting thereon from the outside.

The installations of trays are required to be done under the fuel oil tanks, canisters, filters, fittings and all other units of fuel oil system in which fuel oil leakage is likely to occur.

2.5.2.3. The fuel oil tanks and canisters are required to be located at a distance of not less than 800 mm from the engine and exhaust piping when arranged in one compartment.

2.5.2.4. Detachable flooring is required to be suitably installed, secured and have non-slip surface.

2.6. Arrangement of Machinery and Equipment

2.6.1. Main engines, auxiliary machinery, equipment, pipes and fittings are required to be arranged in such a way so that it provides easy access for servicing and damage repair; and shall also meet the requirements as stated in [2.5.1.1].

2.6.2. The installations of main engines and machinery with horizontal arrangement of the shaft are required to be parallel to the centerline of the craft.

Under the conditions as stated in Part-5A, Chapter-2 of the INTLREG Rules, such machinery can be installed in any other direction about the center line provided that the construction of machinery provides for operation.

2.6.3. The construction of seatings shall be done in accordance with the requirements as stated in Chapter-3. The machinery and equipment constituting the machinery installation are required to be installed on strong and rigid seatings and securely attached thereto.

2.6.4. The main engines, their gears, thrust bearings of shafts shall in part be secured to seatings with fitted bolts. If appropriate stops are provided then the bolts may be omitted.

2.6.5. Appropriate lockers shall be fitted against spontaneous loosening of bolts securing the main engines and auxiliary machinery and shaft bearings to their seatings and also end nuts of shafts as well as bolts connecting the length of shafting.

2.6.6. Where the machinery shall be mounted on shock absorbers, the design of the latter shall be approved by INTLREG.

Shock adsorbing fasteners of the machinery and equipment shall:

a) Maintain vibration-proof properties when the shock-absorbed machinery and equipment operate in the environmental conditions as stated in Part-5A of the INTLREG Rules;

b) Be equipped with a yielding grounding jumper of sufficient length to prevent radio reception interference and comply with the safety engineering requirements;

c) Be resistant to the corrosive media and temperatures;

d) Eliminate the interference with operation of other equipment, devices and systems.

2.6.7. In each case, installation of the equipment on pads made of polymeric material is subject to special consideration by INTLREG.

2.6.8. Installation of the outboard engines on the transom of the craft shall ensure a secure attachment and provide for an additional cable for attaching the engine to the transom or to any robust hull structure.

2.6.9. **Mounting of inboard engines and installation of carburetor (petrol) engines.**

2.6.9.1. The inboard carburetor (petrol) engines as well as outboard engines are not required to be used in craft which intend to operate in different navigation areas.

2.6.9.2. In craft which intend to operate **,** having product of the craft length by its breadth not exceeding 20, the inboard carburetor (petrol) engines as well as outboard engines may be used, provided that the following requirements for the inboard engines are complied with.

a) In craft of open type and in exposed machinery spaces (motor compartments), the inboard engines are required to be protected by casings manufactured of non-combustible materials.

b) The vent pipes provided with the detachable engine casings shall not be less than 80 mm in diameter. One such pipe shall stop short of the craft hull bottom by 70 mm and the other pipe shall come from opening in the highest part of the casing cover.

The upper ends of vent pipes are required to be fitted with ventilator heads with flame arresters.

c) Suction pipes of the carburetors shall be led outside the detachable casings and elevate above those by at least 500 mm. The ends of the suction pipes shall be fitted with ventilator heads with flame arresters.

d) The inlets of the carburetor suction pipes shall be located at a height of not less than 300 mm above the cylinder covers and fitted with flame arresting screens where engines are installed in enclosed machinery spaces. Also flame arresters are required to be fitted where suction pipes at the carburetor air inlet are not provided.

2.7. Arrangement of fuel oil tanks

2.7.1. Arrangement of fuel oil tanks shall be done in accordance with the requirements of [4.10.2].

2.7.2. Fuel oil tanks shall not be located above ladders, internal combustion engines, machinery and equipment with surface temperature under insulation over 220°C, exhaust pipes, smoke uptakes, electrical equipment and main machinery control stations and, as far as possible, shall be arranged far apart there from. Unless a metal bulkhead is provided in between, the fuel oil tanks shall be located at not less than 800 mm from the engine and exhaust.

2.8. Insulation of heated surfaces

2.8.1. For the safety of attending personnel against thermal radiation, all parts of machinery, equipment and piping which may be heated to a temperature over 60°C and constitute a threat to the attending personnel shall be provided with means that prevent or restrict thermal radiation.

Above 220°C temperatures, the surfaces of machinery, equipment and piping are required to be insulated. To prevent destruction of insulation from vibration and mechanical damages, measures shall be taken accordingly. The insulation shall be impervious to flammable liquids and vapours.

In accordance with the requirements of Chapter-7, [2.3.7], [2.3.8] and [2.5.2], insulating materials and surface of insulation shall be done.

2.9. Shafting

2.9.1. General.

2.9.1.1. As per the formulae given in this Section, the minimum shaft diameters without allowance for subsequent turning on lathe during service life are required to be determined. It is assumed that torsional vibrations shall comply in accordance with the requirement of [2.11].

2.9.1.2. Sufficient means shall be provided to prevent the propeller shaft from slipping out of the stern-tube gland, in the event of the propeller shaft breaking, in the crafts with no obstruction for the propeller shaft to slip out of the stern-tube. Measures shall be taken to preclude flooding of the engine room, should the propeller shaft is lost.

2.9.1.3. Shafts are recommended to be manufactured from steel with tensile strength of 400 to 800 MPa.

In each case, the use of other materials is subject to special consideration by INTLREG.

In accordance with the formula (as given in 2.9.2.1), the tensile strength shall not be more than 800 MPa for intermediate and thrust shafts and not more than 600 MPa for the propeller shaft in all the cases.

2.9.1.4. If justified, any constructions and units (reduction gears, cardan and flexible shafts, etc.), can be used in shafting.

2.9.2. **Construction and diameters of shafts.**

2.9.2.1. Intermediate shaft.

According to the following formula, the diameter of the intermediate shaft dint, or the diameter of the propeller shaft in case of a common shaft from the engine to the propeller, in cm, shall not be less than that determined:

$$d_{int} = 677.7 \sqrt[3]{\frac{N\,(1+k)}{n\,\tau_{all}}}$$

Where

N = rated power transmitted by intermediate shaft, kW;

n = rated speed of intermediate shaft, min^{-1};

τ_{all} = allowable tangential stress in shaft cross-section, MPa;

$k = q\,(a - 1)$ .. for installations with internal combustion engines;

$q = \frac{1.4\,J_p}{(J + 1.4\,J_p)}$, or if there are no data on the mass moments of inertia, the value q may be specified, respectively:

q = 0.5 for installations with two-stroke engines;

= 0.4 for installations with four-stroke engines;

J_p = mass moment of inertia of propeller shaft with propeller without considering the added water mass, kg·m²;

$J = (J_{ENG} + J_M)\left(\frac{n_{ENG}}{n}\right)^2$ = mass moment of inertia of propulsion plant with reduction gear, kg·m²;

$J = J_{ENG} + J_M$ = mass moment of inertia of propulsion plant without reduction gear, kg·m²;

J_{ENG} = moment of inertia of all gyrating and reciprocating masses of propulsion plant, kg·m²;

J_{FW} = mass moment of inertia of flywheel, kg·m²;

N_{ENG} = rated speed of engine shaft, min^{-1};

a = factor defined as a ratio of maximum indicated torque as based on the aggregate of measurements made throughout the engine to the mean indicated torque. Value of the factor shall be determined from cumulative diagram of tangential forces constructed for the whole engine or from Table 5.2.1 which holds true only at equal crank angles.

The diameter of intermediate shaft shall not be less than 25 mm.

Table 5.2.1.

Number of cylinders	Type of internal combustion engine	
	Four-stroke	Two-stroke
1	14.00	8.00
2	6.40	3.80
3	4.50	2.60
4	2.80	2.20
5	2.40	1.80
6	2.15	1.50
7	2.20	1.30
8	2.00	1.20

9	1.85	1.15
10	1.60	1.15
11	1.50	1.10
12	1.40	1.05

2.9.2.2. According to the following formula, the design diameter of the propeller shaft, d_p, in cm, shall not be less than that determined:

$$d_p = k \cdot d_{int}$$

Where:

k = factor assumed as follows proceeding from the shaft design features:

- for the portion of propeller shaft between the propeller shaft base cone or the aft face of the propeller shaft flange and the forward edge of the aftermost shaft bearing, (subject to a minimum of 2.5 x d_p):
  - 1.22, where the propeller is keyless fitted onto the propeller shaft taper or is attached to an integral propeller shaft flange;
  - 1.26, where the propeller is keyed onto the propeller shaft taper;
- For the portion of propeller shaft between the forward edge of the aftermost shaft bearing and the forward edge of the forward sterntube seal *k* = 1.15 for all types of design.

The diameter of the propeller shaft may be tapered to the actual diameter of the intermediate shaft on the portion of propeller shaft forward of the forward edge of the forward stern tube seal.

The diameters of propeller shafts may be reduced on agreement with INTLREG, where surface hardening is used.

In case, where the shaft has no continuous liner or is not effectively protected by some other method, portions of the propeller shaft which are in contact with water shall have the outer diameter which exceeds by 5 per cent the diameter as determined by the above formula.

2.9.2.3. As per the formula given in [2.9.2.1], the diameter of thrust shaft in external sliding bearing on a length equal to thrust shaft diameter on either side of the thrust collar and, where roller thrust bearings are used, on a length within the housing of thrust bearing, shall not be less than 1.05 times the intermediate shaft diameter determined.

The diameter of the thrust shaft may be tapered to that of the intermediate shaft beyond the said lengths.

2.9.2.4. Propeller shafts are required to be effectively protected against corrosion.

No protective coating is required for shafts made of corrosion-resistant steel, subject to the condition that the surfaces which are in contact with sea water are polished.

The propeller shaft made of carbon or low-alloyed steel shall have a liner made of such alloys which possess sufficient corrosion resistance in sea water for craft of for the range of navigation mentioned in Part 1 Ch 1 Sec 4.

The thickness of the liner shall not be less than 5 mm.

The portion of the shaft between the liners shall be protected against the action of sea water by a method approved by INTLREG, in case of non-continuous liners.

The liners are required to be shrunk on the shaft in such a way so that it provides tight interference between mating surfaces. The use of pins or other parts for securing the liners to the shaft is not permitted.

2.9.2.5. If the shaft has a central hole, its bore shall not exceed 0.4 of the design diameter of the shaft.

If considered necessary, the bore of the central hole may be increased to the value obtained from the following formula:

$$d_c \leq (d_a{}^4 - 0.97\, d^3\ d_a)\ 1/4$$

Where:

d_c = bore of central hole;

d_a = actual shaft diameter;

d = design diameter of the shaft without the central hole.

2.9.2.6. The increase of the diameter of a shaft which has a longitudinal slot shall be done by at least 0.2 of the design diameter of the shaft. The slot width not more than 0.2 and the slot length shall not be more than 1.4 of the design diameter of the shaft.

The bossed portion of the shaft shall be of such length as to extend beyond the slot, either side, for 0.25 of the design diameter of the shaft.

The transition from one diameter to another are required to be smooth. The ends of the slot shall be rounded to a radius of half the width of the slot and the edges – to a radius of at least 0.35 times the width. The surface of the slot shall have a smooth finish.

2.9.2.7. The shaft diameter shall be increased over a length of at least seven bores of the hole where the shaft has a radial or transverse hole. The hole is required to be

located at mid-length of the bossed portion of the shaft and its bore shall not exceed 0.3 of the shaft design diameter.

In all cases, the shaft diameter shall be increased by not less than 0.1 times the design diameter, irrespective of the hole bore. The edges of the hole shall be rounded to a radius not less than 0.35 times its bore and the inner surface shall have a smooth finish.

2.9.2.8. The increase of diameter of a shaft having a keyway shall be done by at least 0.1 times its design diameter. No increase of the shaft diameter is required after a length of not less than 0.2 of the design diameter from the ends of the keyway.

The diameter need not be increased, if the keyway is made on the outboard end of the propeller shaft.

Fillet radii in the transverse section of the bottom of the keyway shall not be less than 0.0125 of the shaft diameter, but at least 1 mm.

2.9.2.9. The keyways in shaft cones shall be ski-shaped, while in propeller shaft cones they shall be spoon-shaped in addition, on the cone base side.

For the outboard end of a propeller shaft having the diameter in excess of 100 mm, the distance between the cone base and the spoon-shaped keyway end shall be at least:

- 0.5 of the required shaft diameter – with the ratio of the keyway depth to the shaft diameter more than 0.1;
- 0.2 of the design shaft diameter – with the ratio of the keyway depth to the shaft diameter less than 0.1.

The ski-shaped keyway end shall not extend beyond the cone base in coupling shaft cones.

The spoon-shaped keyway ends may be dispensed with, for shafts of less than 100mm in diameter.

The first screw shall be positioned at least 1/3 of the shaft cone length from the shaft cone base where the key is secured by screws in the keyway. The bore depth shall not exceed the screw diameter. The bore edges shall be rounded off. Where the shaft has blind axial bores, the bore edges and end shall also be rounded off. The fillet radius shall not be less than as mentioned in [2.9.2.8].

2.9.2.10. Where keys are used to fit the propeller on the propeller shaft cone, the latter shall have a taper not in excess of 1:12, and in case of keyless fitting in accordance with [2.9.2.11].

2.9.2.11. The taper of the shaft cone shall not exceed 1:15, in case of keyless fitted propellers and shaft couplings.

A keyless assembly shall generally be constructed without an intermediate sleeve between the propeller boss and shaft.

2.9.2.12. The axial pull-up of the propeller boss or coupling in relation to the shaft (when fitting the keyless shrunk assembly), as soon as the contact between mating surfaces is obtained after eliminating the clearance, shall be in accordance with Part-5A, Ch-5 of the INTLREG Rules.

2.9.2.13. End nuts shall be fitted with effective stoppers by which the propellers or couplings are secured to the propeller shaft cone.

The major thread diameter of the end nut used for securing the propeller to the propeller shaft cone shall not be less than 0.6 of the cone base diameter.

2.9.2.14. The stoppers of the end nuts shall be secured to the shaft.

The nut is allowed to be stopped in relation to the propeller boss, in case of shafts having diameter less than 100 mm.

2.9.3. **Shaft couplings.**

2.9.3.1. The bolts used at the coupling flanges of shafts shall be fitted bolts. In each case, the possibility of using coupling flanges without fitted bolts is subject to special consideration by INTLREG.

2.9.3.2. The coupling bolt diameter shall be calculated as given in Part-5A, Ch-4, Sect3 [3.10] of the INTLREG Main Rules.

2.9.3.3. The thickness of coupling flanges of the intermediate and thrust shafts as well as the inboard end of the propeller shaft shall not be less than 0.2 of the required diameter of the intermediate shaft or not less than the bolt diameter determined according to [2.9.3.2] for the shaft material, whichever is the greater.

2.9.3.4. The keyways at the shaft ends for the coupling flange muffs shall conform to the requirements of [2.9.2.8] and [2.9.2.9].

2.9.4. **Shaft bearings**

2.9.4.1. According to Table 5.2.2, the length of the bearing nearest to the propeller shall be taken.

Table 5.2.2: Relative length of bearing

Bearing material	L/d (see note 1)
White metal	2 (see note 3)
Lignum vitae	4
Rubber or other synthetic water-lubricated materials approved by INTLREG	4 (see note 3)

NOTE:

1. L = bearing length; d = design shaft diameter in way of bearing.
2. The bearing length may be reduced if the pressure on the bearing does not exceed 0.8 MPa. In this case, the mass of the propeller shaft and the propeller shall be taken as the load, assuming that it acts on the aft bearing only. In all cases, the length of the bearing shall not be less than twice the actual shaft diameter in way of the bearing.
3. The bearing length may be reduced to two design diameters of the shaft in way of the bearing.

2.9.4.2. The water cooling and lubrication of sterntube bearings shall be of forced type.

A flow indicator or a minimum water flow alarms shall be provided with the water supply system, with respect to the stern tube arrangement design.

The shut-off valve shall be fitted on the stern tube or on the after peak bulkhead for controlling the supply of water to stern tube bearings.

2.9.4.3. The propeller shaft seals of a type as approved by INTLREG shall be used, if the stern tube bearings are oil-lubricated.

The lubricating oil gravity tanks shall be fitted with oil level indicators and located above the margin line.

The forced lubricating oil cooling and oil or bearing liner temperature monitoring are recommended to be implemented having regard to the sterntube arrangement design.

2.9.4.4. The distance between the centers of adjacent shaft bearings, where there are no concentrated masses in the span, shall meet the following condition:

$$5.5\sqrt{d} \leq l \leq \lambda\sqrt{d}$$

Where:

l = distance between the centers of adjacent bearings, m;

d = shaft diameters between bearings, m;

λ = factor taken equal to:

= 14 ……..for n ≤ 500 rpm;

$= \frac{300}{\sqrt{n}}$ …..……for n > 500 rpm;

n = rated shaft speed, rpm.

2.9.4.5. It is recommended to seek the minimum number of shafting supports and the maximum possible length of span between them.

In accordance with [2.9.4.4], the maximum allowable length of the spans between the shaft supports (bearings) which are determined are required to be checked by the bending vibration calculation.

2.9.5. The shafting shall comprise the appropriate braking devices. In the event where the main engine goes out of action, such devices may be used as a brake, a stopper preventing rotation of the shaft.

Such devices are recommended to be used for shafting of less than 60 mm in diameter.

2.9.6. **Cardan shafts**

2.9.6.1. Appropriate strength calculations of the shafts and articulated joints are to be submitted to INTLREG where shafting is allowed to comprise cardan shafts to be used as intermediate shafts.

2.9.6.2. The use of cardan shafts is subject to special consideration by the INTLREG.

2.9.7. **Hydraulic tests.**

2.9.7.1. Upon completion of machining, propeller shaft liners and sterntubes shall be hydraulically tested by a pressure of 0.2 MPa.

2.9.7.2. The sterntube seals, where sterntube bearing are oil-lubricated, shall be tested for tightness by a pressure head up to the working level of liquid in gravity tanks after assembling. In general, the test shall be carried out while the propeller shaft is turning.

2.10. Propellers

2.10.1. The requirements of this Chapter apply to metal fixed-pitch propellers, both solid and detachable-blade propellers, as well as to controllable-pitch propellers.

In each case, design of propellers or blades made of non-metal materials is subject to special consideration by the INTLREG.

2.10.2. **Blade thickness.**

2.10.2.1. The propeller blade thickness, in mm, in two sections being controlled shall not be less than that determined by the following formula:

$$S_p = \frac{3.2\,A}{\sqrt[3]{\left(0.312 + \frac{H}{D}\right)^2}} \sqrt{\frac{N}{n\,B_p\,Z\,M}}$$

Where:

S_p = maximum thickness of expanded blade in the coaxial cylindrical section which is measured normally away from the driving surface (leading edge) or the standard blade section chord, for the blade section being measured, which is the nearest section to the boss, i.e. at the radius:

- 0.20R – for solid propellers where the propeller boss radius is smaller than 0.20 R;
- 0.25R – for solid propellers where the propeller boss radius is greater than or equal to 0.20 R;
- 0.30R – for detachable-blade propellers;
- 0.35R – for CPP;
- 0.6 R – for all propellers irrespective of the propeller boss diameter;

A = coefficient to be determined from Table 5.2.3 for the radius to be calculated and also depending on the blade rake angle; if the blade rake angle differs from the values listed in the Table, the coefficient A shall be taken as for the nearest greater value of the angle;

N = rated power of main engine, kW;

n = rated propeller speed, min^{-1};

B_p = expanded blade width at the design radius, m;

Z = number of blades;

D = propeller diameter;

R = propeller radius, m;

$^H/_D$ = pitch ratio at the radius 0.7 R;

M = 0.6 $R_{m(s)}$+180 MPa, but not more than:

610 MPa – for copper alloys;

570 MPa – for steel;

$R_{m(s)}$ = tensile strength of blade material, MPa

Table 5.2.3.

Blade radius	Blade rake angle measured on the blade driving surface, deg.								
	0	2	4	6	8	10	12	14	16
0.20R	390	391	393	395	397	400	403	407	411
0.25R	378	379	381	383	385	388	391	394	398
0.30R	367	368	369	371	373	376	379	383	387
0.35R	355	356	357	359	361	364	367	370	374
0.60R	236	237	238	240	241	243	245	247	249

2.10.2.2. The blade tip thickness shall not be less than 0.0035D.The intermediate blade thicknesses shall be so selected that the lines connecting the maximum thicknesses points of sections, from the root section through the intermediate one up to the tip section, are fair. The blade thickness which are calculated according to [2.10.2] and [2.10.3] may be reduced in sound cases, provided detailed strength calculations are submitted to the INTLREG.

2.10.3. **Propeller boss and blade fastening parts.**

2.10.3.1. On the suction side, fillet radii of the transition from the root of a blade to the boss shall not be less than 0.04 *D* and shall not be less than 0.03 *D* on the pressure side (*D* is the propeller diameter). The fillet radius on both sides shall be at least 0.03 *D,* if the blade has no rake.

Smooth transition from the blade to the boss using a variable radius may be allowed.

2.10.3.2. The empty spaces between the propeller boss and the shaft cone, as well as inside the propeller cap are required to be filled with non-corrosive mass.

2.10.3.3. The diameter of the bolts (studs), by which the blades are secured to the propeller boss or the minor diameter of the thread of such bolts (studs), whichever is less, shall not be less than that determined by the following formula:

$$d_s = k\ s\ .\ \sqrt{\frac{b\ R_{mbl}}{d\ R_{mb}}}$$

Where:

k = 0.33 in case of three studs in blade flange at the driving surface;

0.30 in case of four studs in blade flange at the driving surface;

0.28 in case of five studs in blade flange at the driving surface;

s = maximum actual thickness of the blade at the design root section (refer to 6.2.1), mm;

b = width of expanded cylindrical section of the blade at the design root section, mm;

R_{mbl} = tensile strength of blade material, MPa;

R_{mb} = tensile strength of bolt/stud material, MPa;

d = diameter of bolt pitch circle; with other arrangement of bolts;

d = 0.85 × l , where l = the distance between the most distant studs, m.

2.10.4. **Propeller balancing.**

The completely finished propeller shall be statically balanced.

2.10.5. **Controllable pitch, adjustable pitch, foldable blade propellers.**

2.10.5.1. The requirements of Part-5A, Chapter-5 of the INTLREG Main Rules are required to be met by the hydraulic power system of the CPP, the overload protection system of the main engines, the lubrication system of the CPP.

2.10.5.2. In each case, construction of the adjustable pitch propellers and the foldable blade propellers is subject to special consideration by the INTLREG.

2.10.6. **Other propulsors**

In each case, the construction of other propulsors such as water-jets, paddle wheels, aerial propellers is subject to special consideration by the INTLREG.

2.11. Torsional Vibration

2.11.1. Application of the requirements of this Chapter shall be done to machinery installations with the main engines having a power output of 37 kW and over.

2.11.2. For the machinery installations with the main engines having a power output from 37 up to 75 kW, the torsional vibration calculations shall include:

a) Specifications of the basic installation components;

b) Natural frequency calculation results for all modes of vibration having resonances within the rated shaft speed range from 0.2 to 1.2;

c) Results of determination of the design stresses in critical sections of shafts caused by the existing resonances. If the resonance zone of the basic order is situated in the proximity to the range from 0.85 to 1.05 of the working shaft speeds (idle running, rated speed on ahead or astern run) or natural frequencies of hull structures, stresses

due to non-resonance forced vibration caused by the resonance frequencies of basic order shall be calculated for these ranges.

As defined in [2.11.3], the permissible stresses due to resonance, near-resonance and non-resonance forced vibration under conditions of continuous running shall not exceed.

2.11.3. Depending on the installation type, the requirements set out in Part-5A, Ch-4 of the INTLREG Main Rules shall be complied with as much as they are applicable, for the machinery installations with the main engines having a power output of 75 kW and over. Absence of dangerous torsional vibration over the entire working speed range in all specified operating modes of the installation shall be supported by a calculation, where the technical opportunity of making torsional vibration measurement on board (e.g. in installations with water-jets, outboard engines, steerable propellers, etc.) is unavailable or impracticable.

2.12. Active Means of the Craft's Steering

2.12.1. General

2.12.1.1. As defined in [1.2], the requirements of the present Section apply to AMCS.

In Chapter-4, the requirements for steering nozzles and steering system of active rudders are given.

2.12.1.2. A minimum of two AMCS are required to be provided, where AMCS is intended for the main propulsion and steering of the motor craft of for vessels intended .

In this case, provision shall be made for control stations equipped with the necessary devices and means of communication, if required, as specified in 2.4.

2.12.1.3. A single AMCS can be installed for the main propulsion and steering of the motor craft which are intended for sailing in different regions , as well as the motor-sailing craft and sailing-motor.

2.12.1.4. In [2.2], the requirements for installation of AMCS machinery and equipment are given.

2.12.1.5. The application of requirements of the relevant Parts and Sections of the present Rules shall be met by the main AMCS, size and materials of shafts, couplings, coupling bolts, propulsors, gearings, as well as electrical equipment. Also, the applicable requirements of the relevant Sections of the present Rules which relate to the rudder and steering gear shall be met as well.

In each case, when the Rules contain no requirements for particular components of AMCS, the possibility of using them is subject to special consideration by INTLREG.

2.12.1.6. In accordance with the following procedure as outlined in Part-5A of the INTLREG Main Rules, calculations of the AMCS gearing shall be made in so much as they are applicable and sufficient, unless otherwise specified in these Rules.

2.12.1.7. Spaces which contain AMCS machinery are required to be equipped with appropriate ventilating, fire extinguishing, drainage, heating and lighting arrangements.

2.12.1.8. In accordance with Part-5A of the INTLREG Main Rules, the requirements for construction, alarm devices, hydraulic tests shall be fulfilled consistently in so much as they are applicable and sufficient, unless specified otherwise in these Rules.

2.13. Vibration

2.13.1. The appropriate measures where necessary shall be taken so that the vibration arising during operation of machinery and equipment has no detrimental effect upon the people and does not interfere with the normal operation of the craft.

2.13.2. The requirements for Vibration standards are specified in Part-5A of the INTLREG Main Rules. These are extended to cover:

a) internal combustion engines with 55 kW and above in power output
b) rpm ≤ 3000.

2.14. Materials and Welding

2.14.1. In accordance with the requirements mentioned in Part-5A, Ch-5, Sec-2 of the INTLREG Main Rules, materials intended for the manufacture of parts of the shafts and propellers shall be done, in so much as they are applicable and sufficient, unless specified otherwise in these Rules.

2.14.2. In accordance with the requirements of Part-2, Chapter-3 of the INTLREG Main Rules, welding procedures and non-destructive testing of welded joints shall be done; in so much as they are applicable and sufficient, unless specified otherwise in these Rules.

2.15. Spare Parts

2.15.1. The required minimum of spare parts is not regulated.

A minimum amount of spare parts for machinery and equipment is advised to be kept on board which are essential for propulsion and safety of the craft and to have a set of special tools and appliances necessary for dismantling and assembling of the machinery in service conditions.

In easily accessible places, the spare parts and special appliances (if available) shall be properly secured and are required to be efficiently protected against corrosion.

SECTION 3 MACHINERY

Contents

3.1. Scope

3.1.1. The application of the requirements of this Section shall be done to the following engines and machinery:

a) Main internal combustion engines;

b) Gears and coupling;

c) Internal combustion engines driving electric generators or auxiliary machinery, units in assembly;

d) Pumps included into systems covered by the requirements of section 4 of this chapter and chapter-7, except for manually operated pumps;

e) Power driven air compressors;

f) Turbochargers of internal combustion engines;

g) Centrifugal separators for fuel oil and lubricating oil;

h) Steering gear;

i) Fans included into systems covered the requirements by section 4;

j) Hydraulic drives;

k) Anchor machinery;

l) Mooring machinery

3.1.2. The engines and machinery as listed in [3.1.1], are subject to the INTLREG supervision during manufacture.

3.1.3. In accordance with the requirements of Part-5A of the INTLREG Main Rules, the scope of technical supervision, hydraulic tests, operation tests, general technical requirements, materials and welding shall be done, in so much as applicable and sufficient unless expressly specified otherwise in these Rules.

3.2. Internal Combustion Engines

3.2.1. General provisions.

3.2.1.1. The application of the requirements of the present section shall be done to all internal combustion engines of power output 37 kW and above.

In each case, the application of these requirements to the internal combustion engines of power output less than 37 kW is subject to special consideration by the INTLREG.

3.2.1.2. The engines are required to be capable of working with an overload exceeding the rated power by at least 10 per cent for not less than one hour.

3.2.1.3. Irregularity of speed of a.c. diesel generating sets intended for parallel operation shall be such that the amplitude of angle oscillations of the generator shaft does not exceed 3.5°/*P*, where *P* is the number of pairs of generator poles.

3.2.1.4. The diesel generating sets which are intended to be used as emergency units are required to be provided with self-contained fuel supply, cooling and lubrication systems.

3.2.1.5. Engines which are intended to drive emergency generators may also be used as electrical power sources for non-emergency consumers and are required to be equipped with fuel oil and lubricating oil filters, as well as with instruments, alarm and protective devices as required for the prime movers of the main sources of electrical power when in unattended operation. In addition with that, fitting of their fuel oil service tanks shall be done with an alarm for low fuel oil level which corresponds to the capacity of the fuel oil daily service tank of the emergency diesel generator.

Also, such engines are required to have design and maintenance system which ensures their constant availability for use as emergency units when the craft is at sea.

3.2.1.6. As mentioned in Part-5A, Chapter-2 of the INTLREG Rules, the rated power output of the engines shall be determined under environmental conditions.

3.2.1.7. The fuel oil and lubricating oil pipes, fittings, flanged connections, filters are required to be screened or otherwise protected in order to prevent petroleum products falling onto hot surfaces, in case of their failure.

3.2.2. Engine frame, crankshaft, scavenging and supercharging, fuel oil system, lubrication, starting arrangements, exhaust arrangements, control, protection and regulation, torsional vibration damper, anti-vibrator.

In accordance with the requirements of Part-5A, Chapter-2 of the INTLREG Rules, the engine frame, crankshaft, scavenging and supercharging, fuel oil system, lubrication, starting arrangements, exhaust arrangements, control, protection and regulation, torsional vibration damper, anti-vibrator shall be done, in so much as applicable and sufficient unless expressly specified otherwise in these Rules.

3.2.3. Instruments and alarm devices.

3.2.3.1. Main and auxiliary engines shall be fitted with instruments for measuring:

a) Lubricating oil pressure at engine inlet;

b) Starting air pressure at main starting valve or starting device inlet (where compressed air starting system is provided);

c) Freshwater pressure (or flow) in the engine cooling system;

d) Lubricating oil temperature at engine inlet;

e) Exhaust gas temperature in exhaust gas pipe;

f) Temperature of cylinder multiple head of the directly air cooled engines;

g) Freshwater (coolant) temperature at engine outlet and inlet. The engines with a compensating tank installed on the engine, only the freshwater (cooling water) temperature at engine outlet is allowed to be measured.

Note: On agreement with the INTLREG, changes may be introduced to the list of measuring instruments, proceeding from the structural features of the engines.

3.2.3.2. As soon as the lubricating oil pressure in the circulating lubrication system drops below the permissible level, each driving engine with a power output exceeding 37 kW are required to be fitted with audible and visual warning alarm device actuating signals.

3.2.3.3. Local control stations of main engines shall be equipped with instruments for measuring:

a) lubricating oil pressure at engine and reduction gear inlet;

b) freshwater (coolant) pressure (or flow) in the engine cooling system;

c) current strength and voltage in the starter battery charging circuit (where electrical starting system is provided);

d) starting air pressure at main starting air valve or starting device inlet (where compressed air starting system is provided);

e) temperature of cylinder multiple head of the directly air cooled engines;

f) crankshaft speed, and where disengaging clutches are fitted, with an instrument for measuring propeller shaft speed as well;

Note: On agreement with the INTLREG, changes may be introduced to the list of measuring instruments, proceeding from the structural features of the engines.

3.2.3.4. In addition to the instruments as listed in [3.2.3.3], the local control stations of main reversible engines or main engines with reverse-reduction gear are required to be equipped with:

- propeller shaft rotation indicators;

- devices for emergency stop of the engine or disengaging of the clutches, operating irrespective of remote control

Note: Structural features and the Manufacturer's recommendations shall be considered when fitting outboard engines (attached to transom) with measuring instruments.

3.2.3.5. Local control stations of auxiliary engines are required to be equipped with instruments for measuring:

a) Lubricating oil pressure at engine and reduction gear inlet;

b) Crankshaft speed;

c) Current strength and voltage in the started battery charging circuit (where electrical starting system is provided) – recommended;

d) Freshwater (coolant) pressure (or flow) in the engine cooling system).

3.2.4. Marking.

3.2.4.1. The marking shall contain the following information:

- Power and speed;
- Identification number of the engine;
- Type of engine, its group (family), if any;
- Trade mark or trade name of the engine manufacturer.

3.2.4.2. The marking shall be in indelible paint. When a label or a nameplate is used, their attachment shall remain reliable throughout the standard service life of the engine and preclude their detachment without damaging them.

3.2.4.3. The marking are required to be made on those parts of the engine where the removal of which renders operation of the engine impossible.

3.2.4.4. After the engine is mounted with all components necessary for its operation, the marking are required to be located in such a way so that it can be clearly visible to a person of a medium height.

3.3. Gears, Disengaging Couplings

In accordance with the requirements of Part-5A of the INTLREG Main Rules, gears, disengaging couplings of engines and machinery as listed in [3.1.1] shall be done in so much as applicable and sufficient unless expressly provided otherwise below.

3.4. Auxiliary Machinery

In accordance with the requirements of Part-5A of the INTLREG Main Rules, the power driven air compressors, fans and turbochargers, power driven centrifugal separators shall be done in so much as applicable and sufficient unless expressly provided otherwise below.

3.5. Deck Machinery

In accordance with the requirements of Part-5A of the INTLREG Main Rules, the steering gear, anchor and mooring machinery shall be done in so much as applicable and sufficient unless expressly provided otherwise below.

3.6. Hydraulic Drives

In accordance with the requirements of Part-5A of the INTLREG Main Rules, hydraulic drives of machinery as listed in [3.1.1] shall be done in so much as applicable and sufficient unless expressly provided otherwise below.

SECTION 4 SYSTEMS AND PIPING

Contents

4.1. Application

4.1.1. The application of the requirements of this section shall be done to the following systems and piping used in craft:

a) Bilge pumping and drain;

b) Fuel oil;

c) Ballast;

d) Water cooling;

e) Compressed air;

f) Lubricating oil;

g) Ventilation;

h) Exhaust gas;

i) Hydraulic drives;

j) Air, overflow, sounding;

k) Domestic liquefied gas

In accordance with the requirements of the present Part of the Rules, pumping and piping of berth-connected craft shall be done in so much as applicable and sufficient unless provided otherwise below.

4.1.2. In accordance with the requirements of [2.1.2.1], fuel oil used in craft shall be complied.

4.1.3. As mentioned in Part-5A of INTLREG Rules, machinery and other components of the systems as shown in [4.1.1], shall remain operative under environmental conditions.

4.1.4. For the purpose of determining test categories, types of joints, thermal treatment, welding procedures, pipes are subdivided into three classes as shown in Table 5.4.1.

Table 5.4.1.

Media conveyed	Class I	Class II	Class II
Inflammable media heated above flash point or having flash point below 60 °C, liquefied gases	Without special safeguards	With special safeguards (see note 1)	-
Fuel oil, lubricating oil, hydraulic oil with flash point of 60 °C and above (see note 2)	p > 1.6 or t > 150	p ≤ 1.6 and t ≤ 150	p ≤ 0.7 and t ≤ 60
Other media (see note 2,3,4)	p > 4.0 or t > 300	p ≤ 4.0 and t ≤ 300	p ≤ 1.6 and t ≤ 200
Note:			

1. Safeguards for reducing leakage possibility and limiting its consequences through proper pipe installation, use of special ducts, protective casings, screening, etc. are subject to special consideration by INTLREG in each case.
2. p = design pressure, in MPa; t = design temperature, in °C (see 4.2).
3. Including water, air, gases, non-flammable hydraulic fluids.
4. For open-ended pipes (drain, overflow, vent, air and steam lines from safety valves) irrespective of the temperature, Class III pipes may be used.

4.1.5. Along with a copy of the INTLREG Type Approval Certificate, the fittings of pipes of all Classes as well as air pipe covers, flexible joints, expansion joints, mechanical joints, insulating joints may be delivered to Small Craft.

The above equipment for use on a particular craft may be accepted by the Surveyor to the INTLREG after verification of the Manufacturer's certificates, verification of the conformity of used materials with the Rules requirements and test performance, in case where the type approval of the INTLREG is unavailable.

4.1.6. Protection and insulation of piping.

4.1.6.1. Based upon a method as approved by INTLREG, the steel pipes of sea water, as well as air, sounding and overflow pipes of water tanks and tanks for alternate carriage of water ballast and fuel oil shall be protected against corrosion.

Such protections are galvanic coating, zinc coating applied by a hot method, plastic coating and also paint coating applied on external surfaces may be used.

The damaged portions of coating shall be restored or protected by other method as approved by INTLREG, upon completion of all welding work during manufacture of pipe sections.

The application of galvanic coating does not supersede the measures for protection of pipes against contact and electrochemical corrosion.

4.1.6.2. Provision shall be made for protection of the craft's shell plating and all components coming into contact with those fittings, against contact corrosion; where bottom and side fittings of non-ferrous metal alloys are used. Standard ring end or ring inter-flange protectors are to be mounted on the branch pipe flanges for cathodic protection of welded suction and discharge branch pipes with fittings against contact corrosion. The use of electric insulating joints of the mating components made in accordance with the approved standards is allowed. In this case, bottom and side fittings shall be insulated on both sides with the obligatory measuring of the joint insulation resistance upon completion of installation.

4.1.6.3. Provision shall be made for protection against contact corrosion, where steel pipes of sea water systems are connected to fittings, pump casings, machinery units and heat exchangers of non-ferrous metal alloys.

4.1.6.4. Flow velocity for pipe portions incorporating formed components, throttle diaphragms, as well as through-hull and seacock distance pieces shall not exceed the values as mentioned in Table 5.4.2.

Table 5.4.2.

Pipe material	**Permissible flow velocity**, m/s
Steel, including galvanized steel	2.5
Copper-nickel and aluminum-brass alloys	2.0

4.1.6.5. Protection against excessive pressure.

a) Pipelines in which pressure in excess of the design pressure is likely to arise are required to be fitted with safety devices so that the pressure would not exceed the design pressure for the pipes.

The liquid diversion from relief valves of pumps transferring flammable liquids shall be effected into the suction side of the pump or to the suction pipeline. This requirement does not apply to centrifugal pumps.

b) A pressure gauge and a safety valve are required to be installed after the reducing valve, where provision is made for a reducing valve on the pipeline. An arrangement for by-passing the reducing valve is allowed for use.

4.1.6.6. Insulation of piping shall comply with the requirements of [2.8].

4.1.7. Flexible joints (hoses)

Requirements for flexible joints / hoses shall be as detailed in Part-5A, Ch-8, [2.3.4] of INTLREG Main Rules.

4.1.8. Welding and non-destructive testing of welds.

In accordance with the requirements of Part-2, Ch-3, Sec-4, welding and non-destructive testing of welds in pipes shall be carried out.

4.1.9. Machinery, equipment and control devices.

4.1.9.1. In accordance with the requirements of Section 3 of this chapter and also chapter-6, sec-1, fans, pumps, compressors and their electric drives used in systems covered by the present Part of the Rules shall be complied.

4.1.9.2. In accordance with the requirements of chapter-6, sec-2, control and monitoring devices of piping systems shall be complied.

4.1.9.3. In accordance with the requirements of Part-5A, Chapter-10, heat exchangers and pressure vessels used in the systems shall be complied.

4.2. Metal Piping

4.2.1. In accordance with the requirements of Part-2, Ch-2, Sec-17 & Sec 18, the materials used for pipes and fittings, as well as the methods of testing the materials shall be complied.

Meeting the INTLREG requirements as to its strength and fire-resistance, the fuel oil pipes are required to be manufactured of steel or other material.

These requirements apply also to lubricating oil pipes in machinery spaces and to pipes conveying other flammable oil products including hydraulic and thermal liquids, if they are located in spaces containing sources of ignition.

4.2.2. In general, pipes and fittings of carbon steel and carbon-manganese steel shall be used for media with temperature not exceeding 400 °C and those of low-alloy steel – with temperature not exceeding 500 °C.

Admission of these steels may be done for temperatures higher than above mentioned, if their mechanical properties and ultimate long-term strength comply with the effective standards and are guaranteed by the steel Maker as suitable for the high temperature service.

Pipes and fittings for media with temperature above 500°C are required to be manufactured of alloy steel. Exhaust gas pipes are not covered under this requirement.

4.2.3. As approved by the INTLREG, copper and copper alloy pipes are required to be seamless pipes or of other type. Copper pipes for Classes I and II shall be seamless.

Utilization of pipes and fittings of copper and copper alloys shall be done generally for media having temperature not exceeding 200°C, and those for copper-nickel alloys, for media with temperature not over 300°C. Bronze fittings may be admitted for media having temperatures up to 200°C.

4.2.4. In each case, the use of spheroidal or nodular graphite cast iron or aluminium alloys for pipes as listed in [4.1.1] is subject to special consideration by the INTLREG.

4.2.5. Pipe wall thickness.

4.2.5.1. The wall thickness of metal pipes (except cast iron and aluminium alloy pipes) operating under the internal pressure shall not be less than that as mentioned in Table 5.4.3.

In each case, the wall thickness of bilge, air, overflow and sounding pipes passing through fuel oil and ballast tanks is subject to special consideration by the INTLREG.

The data as given in Table 5.4.3 do not apply to exhaust gas pipes.

4.2.5.2. In each case, the wall thicknesses of pipes made of spheroidal graphite cast iron, aluminium alloys, titanium alloys and corrosion-resistant alloys are subject to special consideration by the INTLREG.

4.2.5.3. The wall thickness of pipes on a length from cylinders to release valves shall not be less than 4.0 mm and from release valves to discharge nozzles the thickness shall not be less than 3.0 mm, for the carbon dioxide smothering system.

4.2.6. Radii of pipe bends and Heat treatment after bending.

In accordance with the requirements of Part-5A, Chapter-8, sec-2, the radii of pipe bends and heat treatment after bending shall be done, in so much as applicable and sufficient unless expressly provided otherwise below.

4.2.7. Pipe joints.

4.2.7.1. In accordance with the standards approved by INTLREG, use of welded, flanged, threaded and mechanical joints may be allowed.

4.2.7.2. In accordance with the requirements of Part-2, Chapter-3, sec-4, the welded, flanged, threaded and mechanical joints shall be done in so much as applicable and sufficient unless expressly provided otherwise below.

4.3. Plastic Piping

4.3.1. General requirements.

4.3.1.1. The application of the present requirements shall be done to all pipes made of plastics.

However, the requirements do not apply to flexible non-metal joints, rubber hoses, as well as to mechanical joints used in systems with metal pipes.

4.3.1.2. In Part-2, Chapter-2, sec-17, general requirements for plastic pipes and formed components are specified.

4.3.2. Requirements for piping depending on their purpose.

4.3.2.1. Fire-resistance.

The requirements of fire-resistance shall be met by pipes and formed components, integrity of which has significant influence on safety of a craft.

Depending on pipeline ability to maintain integrity during fire tests according to the procedure stated in Annexes 1 and 2 to IMO Resolution A.753(18), three levels of fire-resistance are specified:

- L1: for pipelines withstanding fire test in dry condition during 1 hour;
- L2: for pipelines withstanding fire test in dry condition during 30 min;
- L3: for pipelines withstanding fire test in filled condition during 30 min.

Depending on fire-resistance level, the scope of application of plastic pipelines, location and media conveyed is given in Table 5.4.4.

Table 5.4.3.

External diameter, mm	**Minimum pipe wall thickness, mm**				
	Steel pipes				
	Pipes of systems other than stated in columns 3 and 4	**Venting, overflow, sounding pipes of built-in tanks**	**Sea water pipes (bilge pumping, ballast, cooling water, fire-extinguishing systems)**	**Copper**	**Copper alloys**
6.0	–	–	–	1.0	0.8
10.2	1.6	–	–	1.0	0.8
12.0	1.6	–	–	1.2	1.0
14.0	1.6	–	–	1.2	1.0
16.0	1.8	–	–	1.2	1.0
22.0	2.0	–	3.2	1.2	1.0
25.0	2.0	–	3.2	1.5	1.0
26.9	2.0	–	3.2	1.5	1.0
30.0	2.0	–	3.2	1.5	1.0
32.0	2.0	–	3.2	1.5	1.2
38.0	2.0	4.5	3.6	1.5	1.2
42.4	2.0	4.5	3.6	1.5	1.2
45.0	2.0	4.5	3.6	1.5	1.2
48.3	2.3	4.5	3.6	2.0	1.5
54.0	2.3	4.5	4.0	2.0	1.5

57.0	2.3	4.5	4.0	2.0	1.5
63.5	2.3	4.5	4.0	2.0	1.5
70.0	2.6	4.5	4.0	2.0	1.5
76.0	2.6	4.5	4.5	2.0	1.5
82.5	2.6	4.5	4.5	2.0	1.5
89.0	2.6	4.5	4.5	2.5	2.0
101.6	2.9	4.5	4.5	2.5	2.0

NOTES:

1. 1. For pipes with thicknesses and diameters indicated in the Table, the nearest values specified in national or international standards may be accepted on agreement with INTLREG.
2. The tabulated values require no allowance for negative manufacturing tolerance and reduction in thickness due to bending.
3. The tabulted values do not cover the stainless steel pipes the minimum thicknesses of which are subject to special consideration by INTLREG.
4. For the diameters greater than those stated in the Table, the minimum thicknesses are subject to special consideration by INTLREG in each case.
5. If pipes are effectively protected, then, at the discretion of INTLREG, the wall thicknesses of pipes stated in columns 3 and 4 may be reduced by an amount of not more than 1 mm.
6. For sounding pipes, the thicknesses stated in column 3 apply to the parts which are outside the tanks for which these pipes are intended.
7. For threaded pipes, the wall thickness shown is the minimum thickness at the bottom of the thread.

Table 5.4.4: Application of plastic pipelines

Nos	Medium to be conveyed	Piping systems	Location					
			A	G	H	I	J	K
1	Flammable liquids with flash point > 60 °C	Fuel oil	+	0	0	0	L1	L1
		Lubricating oil	+	-	-	0	L1	L1
		Hydraulic	+	0	0	0	L1	L1
2	Sea water	Drainage	L1	0	0	0	-	L1
		Drain pipes of internal spaces	L1 (see note 1)	0	0	0	0	0
		Sanitary drains (internal)	0	0	0	0	0	0
		Drainage from weather decks	0 (see note 2)	0	0	0	0 (see note 2)	0
		Fire main systems	L1	-	0	0	+	L1
		Ballast	L3	0	0	0	L2	L2
		Essential cooling systems	L3	-	0	0	-	L2
		Non-essential cooling systems	0	0	0	0	0	0
3	Fresh water	Essential cooling systems	L3	0	0	0	0	0
		Non-essential cooling systems	0	0	0	0	0	0
4	Other media	Air, sounding and overflow pipes: water tanks and dry compartments	0	0	0	0	0	0
		Flammable liquids, T_{flash} > 60 °C	+	0	0	0	+	+
		Pneumatic control systems	L1 (see note 3)	0	0	0	L1 (see note 3)	L1 (see note 3)
		Air pipes for domestic services	0	0	0	0	0	0
		Low pressure steam, water heating	L2	0	0	0	0	0

Symbols::

A – machinery spaces;
G – fuel oil tanks and trunks;
H – ballast tanks and trunks;
I – cofferdams, dry compartments, etc.;
J – accommodation, service spaces and control stations;
K – weather decks;
0 – fire test is not required;
"–" – not applicable;
"+" – only metal materials with fusion point above 925 °C.

NOTES:

1. For drainage pipes serving only the particular space, "0" may be used instead of "L1".
2. Scupper holes of weather decks shall be "+", if they are not provided with the appropriate blanking means.
3. When control functions are not foreseen, "0" may be used instead of "L1".

4.3.2.2. Flame spreading, fire-retardant coatings.

According to the procedure given in Annex 3 to the Resolution, considering the changes arising from curved surface of pipes or specified by other standards approved by INTLREG, all pipes, with the exception of pipes located on exposed decks, in cofferdams, etc., shall have the characteristic of slow flame-spread on the surface, not exceeding the average values fixed in IMO Resolution A.653(16) and determined.

In accordance with the requirements of Ch-3, Sec-2 of this part, fire-retardant coatings are applied to provide the required level of fire-resistance shall be complied. According to the approved recommendations of the Manufacturer Fire-retardant coatings are required to be used.

According to the procedure approved by INTLREG in each case, the application of Fire-retardant coatings in junctions shall be done after conducting of hydraulic tests of the system in compliance with the pipe Manufacturer's recommendations.

4.3.3. Installation requirements.

4.3.3.1. In accordance with the Manufacturer's recommendations, installation work shall be performed.

4.3.3.2. The distances between supports shall not exceed the values as recommended by the Manufacturer.

In selecting supports the following shall be taken into consideration:

- distances between them,
- pipe sizes,
- mechanical and physical properties of pipe material,
- mass of pipes and liquid contained therein,
- working temperature,
- influence of heat expansion,
- loads due to external forces, axial forces, hydraulic impacts, vibration, which may occur in the system,

Allowance shall be made for possible simultaneous effect of the above mentioned loads.

The load from pipe weight is required to be equally distributed over the entire load-bearing face of the support. Measures shall be taken to minimize pipe wear at junctions of the pipes with the supports.

4.3.3.3. The components of the system having significant mass shall be fitted with separate supports. Allowance shall be made for periodically involved concentrated loads in pipe laying.

When necessary, pipes shall be protected from mechanical damage.

4.3.3.4. The requirements of [4.5.1.1], [4.5.1.4] and [4.5.1.5] shall be met, where plastic pipelines pass through watertight and fire-resistant decks and bulkheads.

4.3.3.5. Account shall be taken of the compensation tolerance for relative displacement between piping and steel structures, when assembling plastic pipelines with regard to difference in heat expansion ratios and craft's hull deformation.

When calculating heat expansions, the working temperature of the system and the temperature at which assembling is carried out, shall be taken into consideration.

4.3.3.6. Allowance shall be made for periodically involved concentrated loads, when laying pipes, if their action is possible. As a minimum, the force caused by one person of 100 kg in mass at the middle of span of any pipe with outer diameter over 100 mm shall be taken into consideration.

4.3.3.7. For transferring liquids, such as diesel oil and petrol, pipes of electrically conductive material shall be used in systems.

The plastic pipes passing through dangerous zones shall be electrically conductive, regardless of the liquids transferred.

Resistance shall not exceed 106 Ohm in any point of the piping system as relative to the earth. Pipes and formed components having electrically conductive layers shall preferably be of equal conductivity.

Protection of such pipes shall be given suitably from being damaged by electric discharge caused by difference in electrical conductivity of layers.

Earth connection shall be checked after installation. Earthing wires shall be accessible for examination.

4.3.3.8. With the use of glued, welded, flanged or other joints pipelines may be connected.

Strength of joints shall not be less than strength of a pipeline where they are mounted.

4.3.3.9. Prior to installation, the method of pipe connection (junction) is required to be developed and approved.

4.3.3.10. Surveys and tests as specified in this Section shall precede the approval of the method.

4.3.3.11. The following shall be considered in the method of joint connection:

- Applied materials,
- Used tools and accessories,
- Requirements for preparation of joints,
- Temperature conditions,
- Requirements for dimensions and tolerances,
- Acceptance criteria upon completion of work and tests.

4.3.3.12. In accordance with the accepted procedure to prepare test assemblies it is necessary for the inspection of pipe joint quality, which shall include at least one pipe joint with a pipe and a pipe with a formed component.

The test assembly shall comprise a pipe with the maximum diameter.

4.3.3.13. A test connection shall be subjected to a hydraulic test by a pressure 2.5 times higher than the design pressure, during 1 hour following joint setting. Leakage and breaks of joint are not allowed.

4.3.3.14. The essential piping system shall be hydraulically tested by a pressure at least 1.5 times higher than the design pressure, after installation on board.

After installation on board non-essential piping system, may be tested for tightness with the working pressure.

4.4. Fittings

4.4.1. Construction, marking, arrangement and installation of fittings.

4.4.1.1. In accordance with the requirements of Part-5A, Chapter-8, construction of valves shall be done.

4.4.1.2. Marking of fittings.

In order to show the purpose of fittings shut-off fittings are required to be provided with conspicuous nameplates fixed in place and bearing clear inscriptions.

At control stations remote-controlled valves shall have attached identification plates showing their purpose, as well as position indicators “open” and “closed”. The indicators need not be fitted where the remote control is used only to close the valve.

4.4.1.3. Arrangement and installation of fittings.

The fittings which are arranged on watertight bulkheads shall be secured to welded pads by studs, or alternatively the fittings may be welded to bulkhead pieces. In welded pads, the stud holes shall not be through holes.

Measuring instruments of fuel oil and lubricating oil systems are required to be provided with valves or cocks to cut the instruments off from piping. Thermometer sensors shall be encased in compact sleeves.

In fuel oil and lubricating oil pipes, sight glasses shall be heat-resistant.

4.4.2. Filters.

4.4.2.1. Filters are required to be provided with a device in order to indicate that there is no pressure therein before they are opened.

The tubes of such devices are required to be carried to trays in such a way so that spillages are not sprayed around.

4.4.2.2. Filters forming part of systems with combustible working medium are required to be located as far away as possible from potential sources of ignition.

4.4.3. Sea chests and openings in shell plating (Bottom and side fittings)

4.4.3.1. Sea chests

a) Sea inlet valves shall be secured to sea chests directly.

b) The attachment of sea inlet valves can be done to welded pads or fitted on distance pieces directly welded to the hull bottom shell plating.

The distance piece shall have welded flange joint. The wall thickness of a distance piece shall not be less than the thickness of the bottom plate, but in no case it shall be less than 6 mm.

c) Gratings are required to be fitted with all the openings in shell plating for sea chests, welded inlet connections and inlet distance pieces. Holes or slots in the shell plating are allowed instead of gratings. The net area through the gratings or slots shall not be less than 2.5 times the area of the valve connected to the sea inlet.

The width of slots or the diameter of holes in gratings or shell plating is required to be about 20 mm.

The compressed air is recommended to clear the sea chest gratings. The pressure of compressed air in the clearing system shall not exceed 0.3 MPa. Clearing pipes are required to be provided with non-return shut-off valves.

d) If the manhole is located above the deepest load line then provision shall be made for the access into sea chests via detachable gratings or manholes of the side sea chests.

e) The diameter of the water re-circulated pipe shall not be less than 0.85 of the discharge pipe diameter, for sea chests.

4.4.3.2. Openings in shell plating (Bottom and side fittings)

a) The location of sea inlet and discharge openings in shell plating shall be such as to prevent:

- Sewage, domestic and discharge water penetrating into the craft's spaces through side scuttles, as well as any discharge of water into lifeboats and liferafts when lowered;
- Sewage, domestic waste water and other wastes being sucked by sea water pumps.

The discharge openings are required to be fitted with appropriate arrangements to prevent water penetration into the craft's spaces, lifeboats and liferafts, where it is impracticable to comply with the requirements of the above.

b) The overboard discharges from the enclosed spaces below the freeboard deck may be provided only with one locally controlled non-return shut-off valve.

c) The scuppers and overboard discharge pipes from open decks and spaces, led outboard at less than 600 mm above the deepest waterline are required to be fitted with non-return valves (dampers) at the outer shell.

If the wall thickness of these pipes installed below the freeboard deck is not less than the thickness of the shell plating, no valves may be provided, but in no case it shall be less than 5 mm.

d) All the sea inlets and discharges of systems and piping in connection with operation of the main and auxiliary machinery shall be provided with readily accessible shut-off valves or sluice valves, in machinery spaces, locally controlled. An indicator shall be fitted with the controls to show whether the valve is open or closed.

e) The controls of bottom and inlet fittings are required to be located in readily accessible places and are to be fitted with a device to indicate whether the valve is open or closed.

f) In machinery spaces, the controls of the bottom inlet and side outlet fittings of the sea water system that lie located below the waterline, and arrangement of the control gear of the ejector drainage system shall be done in such a manner so that there is enough time to access and activate them from a position above the level of water incoming to the space.

The controls of the bottom and side fittings of the sea water system, which lie below the waterline, are recommended to be located above the freeboard deck.

g) Welded pads shall be attached with bottom and side fittings. On welded distance pieces, fittings may also be installed with welded flange joints. The wall thickness of a distance piece shall not be less than the minimum thickness of shell plating in the ends of the craft.

Stud holes in welded pads shall not penetrate the shell plating.

h) In case of fire, flange gaskets of bottom and side fittings shall not be manufactured of materials which get easily deteriorated.

i) Corrosion-resistant materials shall be used for the manufacture of spindles and closing parts of bottom and side fittings.

4.5. Piping Laying

4.5.1. Piping laying through watertight and fire-resistant structures

4.5.1.1. The number of pipelines passing through the watertight bulkheads shall be kept to a minimum.

For dealing with the contents of the forepeak, the collision bulkhead shall not be pierced below the bulkhead deck by more than one pipeline.

A screw-down valve shall be installed directly on the collision bulkhead inside the forepeak, operable from a readily accessible position on the bulkhead deck for each pipe passing through the collision bulkhead. The shut-off valve may be omitted on the pipelines passing through the collision bulkhead above the bulkhead deck or freeboard deck.

4.5.1.2. The appropriate sockets, welded pads and other details to ensure the integrity of the structure concerned shall be used, where pipelines pass through watertight bulkheads, decks and other watertight structures.

The holes for studs shall be kept within the welded pads and shall not penetrate watertight structures.

In the event of fire, gaskets made of materials which are readily deteriorated shall not be used.

4.5.1.3. The requirements of Chapter-7 of this part shall be met, where pipelines pass through fire-resistant divisions.

4.5.1.4. Valves capable of being operated from a position above the bulkhead deck shall be fitted, where plastic pipes pass through watertight bulkheads and decks forming boundaries of watertight compartments.

In fire resistance, the valves shall be of steel or another material which is equivalent to steel.

4.5.1.5. Provision shall be made for steel bulkhead sockets of appropriate length and valves that may be closed from either side of the bulkhead, where plastic pipes pass through a division of the main vertical fire zone. In fire resistance, the valves shall be of steel or another material equivalent to steel.

4.5.2. Piping laying in spaces and tanks.

4.5.2.1. Unless the pipes are laid in oil-tight ducts, fresh water pipelines shall not be laid through fuel oil and lubricating oil tanks, nor shall fuel oil and lubricating oil pipes pass through fresh water tanks.

Air, sea water and lubricating oil piping, sounding and overflow pipes may pass through fuel oil tanks if these pipes are of seamless type and have no detachable joints inside the tanks.

4.5.2.2. Adequate protection shall be provided for pipes which pass through chain lockers and other spaces, in which they are subject to mechanical damage.

4.5.2.3. If the pipes used have no detachable joints, pipes conveying fuel oil shall not be laid through the accommodation and service spaces as well as under the lining, with the exception of fuel filling pipes which are allowed to be laid through sanitary spaces.

4.5.2.4. The pipes of all the systems and the ventilation ducts shall be fitted with arrangements for blow-down of the working medium or draining of liquid, where necessary.

4.5.2.5. Permission is not provided for pressure pipes to be laid above and behind the main switchboards as well as the control panels of essential machinery and equipment.

Such pipes may be carried at a distance not less than 500 mm from the fronts and sides of these switchboards and control panels, provided that at a distance within

1000 mm from switchboards and control panels no detachable joints are used, or the flanged joints have protective casings.

4.5.2.6. On twin-hulled craft, the pipes connecting identical systems of both hulls shall be provided with compensators, when routed along the common upper deck, where necessary, and protected against damage.

Damage to these pipes shall not involve failure of the systems connected by them.

4.6. Bilge-Pumping System and Ballast System

4.6.1. Pumps.

4.6.1.1. Two power driven bilge pumps (one of which shall be a stationary pump connected to the bilge-pumping system) shall be provided in a separate hull compartment, for each self-propelled craft with main engines having total power output of 220 kW and above.

Sanitary or general service pumps of sufficient capacity can be used as bilge pumps. One of the bilge pumps may be a main engine driven pump or a water ejector.

The requirement of Ch-7, [6.3] of this part shall be met, if fire pumps are used as bilge pumps.

4.6.1.2. At least two bilge-pumping arrangements (one of these arrangements may be stationary power driven pump or an ejector, while the other arrangement may be a manual pump with a capacity of each pump not less than that as mentioned in Table 5.4.5) shall be provided for each self-propelled craft with main engines having total power output of less than 220 kW, installed in a separate hull compartment. INTLREG may specially consider the use of a portable power pump instead of the stationary one.

One manual bilge pump may be installed on craft having no water fire-fighting system. In this case, compartments may be drained using flexible hose.

Table 5.4.5:

Hull length, L_H, m	Total bilge pump capacity, m^3/hr	Piping diameters, mm	
		Main bilge lines	Bilge suctions
L < 7	3	25	
7 ≤ L < 12	5	32	
7 ≤ L < 15	5	32	
15 ≤ L < 24	6	40	32

4.6.1.3. On self-propelled craft with engines installed in exposed locations (in cockpit or on transom), pump capacities and internal diameters of the bilge pipes shall not be less than those as stated in Table 5.4.5.

Also, the following requirements shall be met, depending on the craft size:

a) if the hull length is less than or equal to 7 m, at least one manual bilge pump which may be a portable pump shall be installed. A non-sinking bailer may be used on agreement with INTLREG;

b) if the hull length is of 7 to 12 m, use shall be made of at least one stationary manual pump operable from the cockpit, with all access ladders and hatches closed;

A secondary pump is advised to have on board, permanently installed or portable, of the same capacity;

c) if the hull length is greater than or equal to 12 m, the craft shall be provided with two pumps one of which shall be a power driven pump.

In this case, with all access ladders and hatches closed, one pump shall be operable from the cockpit.

4.6.1.4. As self-propelled craft with main engines of power output less than 220 kW, non-self-propelled craft and berth-connected craft provided with power sources or supplied with power from shore are required to be equipped with drainage arrangements, installed in a separate hull compartment or with engines installed in exposed location (in cockpit or on transom).

4.6.1.5. It is sufficient to install one or several manual pumps with a total capacity not less than that as stated in Table 5.4.6., for non-self-propelled manned craft having no power-driven machinery.

Table 5.4.6:

$0.8\ L \cdot B \cdot D_1$, m^3	**Total pump capacity**, m^3/hr
Up to 50	4
More than 50	6
NOTE: Definitions of L, B, D (length, breadth and depth), in m, are given in Chapter-3, Section-1. D is measured in each particular case up to the freeboard deck level.	

4.6.1.6. On multi-hulled craft (catamarans, trimarans), complying with the relevant requirements of this section, each hull shall be provided with an independent bilge-pumping system.

4.6.1.7. Centrifugal bilge pumps shall be of self-priming type, or alternatively the system shall be provided with a vacuum arrangement.

4.6.1.8. In accordance with the following formula, each bilge pump as required in [4.6.1.1] shall have a capacity *Q*, in m^3/hr, not less than that determined:

$$Q = 5.65 \times 10^{-3} \times d_3$$

Where:

d = inner diameter of the main line determined in accordance with [4.6.2.1].

One of the bilge pumps may be replaced by two pumps with a total capacity not less than that stated above.

4.6.1.9. In accordance with the requirements of Chapter-4, Section 10, cockpits may be drained by gravity.

4.6.2. Piping diameters.

4.6.2.1. In accordance with the following formula, the internal diameter d_1, in mm, of the main bilge line and that of bilge suctions directly connected to the pump, except specified in [4.6.2.2], shall be determined:

$$d_1 = 1.5\sqrt{L\,(B + D)} + 25$$

Where,

L, B, D – see [4.5.1.4].

4.6.2.2. In accordance with the following formula, the internal diameter *d*o, in mm, of the branch bilge suctions connected to the main bilge line and that of the manual pump suction shall be determined:

$$d_0 = 2.0\sqrt{l\,(B + D)} + 25$$

Where:

l = length of the compartment to be drained, as measured at its bottom, m;

B, D – see [4.6.1.4]. In case of multi-hulled craft, B is assumed to be the breadth of one hull.

4.6.2.3. In accordance with the formulae [4.6.2.1] and [4.6.2.2], the internal diameter of the main bilge line and bilge suctions determined, shall not be less than 40 mm. This value of the internal diameter may be reduced to 20 mm, on craft of less than 10 m in length. In any case, the internal diameter of the main bilge line and bilge suctions directly connected to the pump shall not be less than the bilge pump suction diameter.

4.6.2.4. The total cross-sectional area of two largest branch bilge suctions connected to the chest shall be less than the cross-sectional area of the pipe connecting the distribution chest with the bilge main, but it need not be greater than the sectional area of the bilge main.

4.6.2.5. In the engine room, the diameter of the emergency bilge suction shall not be less than that of the pump suction.

4.6.3. Piping laying.

4.6.3.1. The bilge lines and their branch suctions are required to be arranged in such a way so that it enables any watertight compartment to be drained by any one of the pumps as required in [4.6.1.1], [4.6.1.2], [4.6.1.4], [4.6.1.8].

4.6.3.2. In the event of pipe breaking or any other pipe damage in any other compartment because of collision or grounding, the system are required to be arranged in such a way so that it prevent the possibility of sea water penetrating inside the craft, or water from one watertight compartment into another. For this purpose, the suction valves of the drainage pipes open ends, connected directly to the chests, shall be of non-return type. Provision shall be made for control of the required valves serving the suctions from positions above the main deck, in case where only one common piping system for all pumps is available. Other equivalent arrangements are also allowed.

4.6.3.3. In order to drain the engine rooms possibly through the suctions directly connected to the pump, the arrangement of the bilge pipes shall be made accordingly, and the other compartments being simultaneously drained by other pumps.

4.6.3.4. The arrangement of the bilge pipes shall be done in such a way so that it enables one of the pumps running, in case when the rest of pumps are inoperative or are used for other purposes.

4.6.3.5. In general, the bilge pipes shall be laid outside the double bottom space. The bilge suctions in each watertight compartment shall be fitted with non-return valves, where the pipe is laid within the double bottom space.

4.6.3.6. Depending on the shape and size of the compartment, the arrangement and number of the bilge suctions shall be determined in each case.

In each compartment, the bilge suctions shall be arranged in such a manner as to ensure most complete drainage of the compartment with the craft been heeled 5^0 either way.

4.6.3.7. Lengthwise, bilge suctions are required to be arranged in the following manner:

- On craft operating in upright position – near the aft bulkheads of forward compartments and near the forward bulkheads of aft compartment;
- On craft constantly operating with a trim by stern – near the aft bulkheads of compartments.

4.6.3.8. Draining for peaks and steering engine rooms may be done by their own manual pumps or water ejectors as well as through drain pipes laid into the engine room or the adjacent compartment.

Drain pipes shall have readily accessible self-closing valves or gate valves fitted on the bulkheads on the adjacent compartment side, provided that the gate valves are controlled from the deck, and shall not be less than 39 mm in diameter.

4.6.3.9. By means of manual pumps, water ejectors or by removing water through drain openings into the forepeak, drainage of chain lockers can be carried out.

4.6.4. Drainage of enclosed machinery spaces.

4.6.4.1. In compliance with [4.6.3.1] to [4.6.3.7], the arrangement and number of bilge suctions in the engine and boiler rooms shall be done. One of the bilge suctions shall be connected directly to an independent bilge pump.

4.6.4.2. Mud boxes or strum boxes shall be fitted on suctions for bilge drainage of machinery spaces, provided they are accessible for cleaning. Pipes between mud boxes and bilges shall be as straight as possible. The lower ends of these pipes need not be fitted with strum boxes.

4.6.4.3. In addition to bilge suctions as required by [4.6.3.1], provision shall be made for emergency bilge drainage of machinery spaces in all self-propelled craft of design categories **R, R100, R200, R300** or **B** with main engines having total power output of 220 kW and over. The largest available sea water power pump shall be fitted with direct suction pipe at the drainage level and also fitted with a non-return stop valve for this purpose. The diameter of this direct suction shall be equal to that of the pump suction branch.

As required in [4.6.1.8], the capacity of this pump shall exceed by an amount satisfactory to the INTLREG.

The spindles of the non-return stop valves which are fitted to the suction branches shall extend above the engine room floor plates to a sufficient height and shall bear a notice “For emergency use only”.

In compliance with Ch-7, [6.3] of this part, fire pumps shall be used for emergency drainage of machinery spaces.

This requirement is of recommendatory character for sailing-motor and motor-sailing craft.

On the suction for emergency drainage, no strum boxes and strainers shall be fitted.

4.6.4.4. The arrangement shall be made in such a way that the bilge wells under the propulsion motors are properly drained and automatic alarms are fitted to give warning at excess of permissible level in the wells, in craft having an electric propulsion plant.

4.6.5. Ballast system.

4.6.5.1. At least one pump shall serve the ballast system. For the largest ballast tank, the capacity of the ballast pump shall be such as to ensure the speed of water not less than 2 m/s, with the suction pipe diameter taken from formula as given in [4.6.5.4].

As appropriate, an independent ballast system shall be provided for each hull of twin-hulled craft.

4.6.5.2. Bilge, fire or standby cooling pumps as well as general service pumps of sufficient capacity, may be used as ballast pumps.

The self-priming type pumps are to be used for pumping out ballast water from the double-bottom tanks.

In compliance with Ch-7, [6.3] of this part, fire pumps may be permitted.

4.6.5.3. Generally, ballast tanks shall not be intended for the carriage of fuel oil.

In each particular case, possible relaxations from this requirement shall be specially considered by INTLREG.

The standby pump shall neither be used for ballasting, nor the ballast pump be used as a standby cooling pump or fire pump.

4.6.5.4. In accordance with the following formula, the internal diameter, d_B, in mm, of ballast pipe suctions for separate tanks shall be determined:

$$d_B = 16\sqrt[3]{-v}$$

Where: v = ballast tank capacity, m^3.

The diameter may be accepted by the nearest standard size.

From the formula as given in [4.6.5.4], the diameter of the ballast main line shall not be less than the maximum diameter of the suction are to be determined.

4.6.5.5. To ensure pumping of water from any ballast tank, the arrangement of the suctions shall be made accordingly, whether the craft is upright or heeled to 5°.

4.7. Air, Overflow and Sounding Pipes

4.7.1. Air and overflow pipes, overflow tanks.

4.7.1.1. According to the requirements of this section, each tank intended for the storage of liquid and each cofferdam to be filled, as well as the sea chests and ice boxes shall have air pipe.

The shutoff valves shall be fitted directly on air pipes of ice boxes and sea chests.

Air pipes of sea chests and ice boxes, as well as air pipes of double bottom tanks and tanks adjoining the shell plating, shall be carried to above the bulkhead deck (main deck).

4.7.1.2. The air pipes of tanks are required to be fitted at the highest parts of the tanks and, as a rule, at a place that is at maximum distance from the filling pipe. Depending on the shape and size of the tank, the number and arrangement of the pipes shall be selected, and shall also prevent the formation of air pockets.

The requirements of [4.7.1.8] shall be complied, if air pipes of fuel oil tanks are used as overflow (air/ overflow) pipes.

The air pipes of tanks carrying liquids of different kinds are not permitted to be laid into a common line.

4.7.1.3. The height of the air pipes measured from the deck to the level to which liquid may have access from below shall be decided by their intended range .

The air pipes are required to be located in places where there is no possibility of their damage.

4.7.1.4. The upper end of each air pipe shall be made as a bend, with its opening faced downwards, or shall have another construction agreed upon with INTLREG.

It is recommended that the outlets of air pipes situated on the open deck shall have permanently attached automatically operating covers which prevents the sea water from penetrating into the tanks, but allowing a free access to air and liquid.

Where the tanks are installed, the air pipes of independent lubricating oil tanks not fitted with heating arrangements, may terminate in spaces, and in case the tank is overflowing, precautions are taken that will prevent spillage of oil onto electrical equipment or heated surfaces.

4.7.1.5. The total cross-sectional area of air pipes in tank filled by gravity shall be more than the total cross-sectional area of the filling pipe of that tank.

The total cross-sectional area of air pipes in tank filled by the craft's pumps or shore pumps shall be more than 1.25 times the cross-sectional area of the filling pipe of that tank.

The cross-sectional area of a common air pipe from several tanks shall be at least 1.25 times the cross-sectional area of the common filling pipeline of these tanks.

4.7.1.6. In way of accommodation spaces, the air pipes of fuel oil and lubricating oil tanks shall not have detachable connections.

4.7.1.7. Nameplates shall be attached to the upper ends of all air pipes.

4.7.1.8. As specified in [4.7.1.15], fuel oil tanks filled by pumps shall be provided with overflow pipes directing fuel oil to an overflow tank or storage tank the capacity of which shall not be less than that of the overflow tank.

The cross-sectional area of an air pipe of a tank fitted with overflow pipe shall be more than 1/3 of the cross-sectional area of the filling pipe.

The sectional area of the common air pipe shall not be less than 1/3 of the sectional area of the common filling pipe of these tanks, where the air pipes from several tanks fitted with overflow pipes are combined into a common pipe.

Air pipes shall not be connected to the air pipes of overflow tanks, where they are simultaneously used as overflow pipes.

4.7.1.9. Under all conditions, the inner overflow pipe diameter shall be at least 40 mm.

The arrangement of air pipes shall prevent the formation of hydraulic seals in the pipes.

4.7.1.10. The header or pipe shall be located above the deepest waterline, where the overflow pipes from several integrated tanks located in different watertight compartments are laid to a common header or pipe.

4.7.1.11. As mentioned above, the overflow pipes of fuel oil and lubricating oil daily and settling tanks shall be laid to tanks located below the tanks.

4.7.1.12. With a minimum clearance, overflow pipes shall be extended to the bottom of the overflow tanks. The flow area of the clearance shall not be less than the sectional area of the overflow pipe.

4.7.1.13. Minimum overflow pipe bore shall be 50 mm.

4.7.1.14. When the predetermined level is reached in the overflow tank, a sight glass shall be fitted on vertical sections of the overflow pipes or an alarm device are required to be provided to give warning.

On the fuel oil and lubricating oil pipes, the sight glasses are required to be heat-resistant.

4.7.1.15. Within 10 min, the capacity of an overflow tank shall not be less than the maximum permissible throughput of the fueling system.

Whenever the tank filling reaches 75 per cent, the overflow tank shall be provided with visual and audible alarms activated.

4.7.1.16. In accordance with the requirements of [3.2.2], the air pipes from crankcases of internal combustion engines shall be complied.

4.7.2. Sounding arrangements.

4.7.2.1. Sounding pipes for level measurement, generally extended to the exposed decks, shall be provided for every tank intended for the storage of liquid, cofferdams and void spaces with bilge connections, as well as bilges and bilge wells in spaces which are not readily accessible at all times. INTLREG may approve other sounding arrangements of design which can be used in tanks.

Sounding pipes shall be as straight as possible and shall not interfere with taking soundings with a sounding rod.

Sounding pipes of independent tanks are not required to be carried to the exposed deck.

The sounding pipes of the fuel tanks must not be laid to accommodation and service spaces. To avoid any risk of ignition of leakages from sounding pipes, upper ends of the sounding pipes of fuel oil and lubricating oil tanks shall not be laid to the spaces which may present such a risk.

Permission of other oil-level gauges may be granted, provided they are protected by casings of steel or another fire-resistant material.

In accordance with the requirements of [4.10.2.3(h)], level indicators in the fuel oil and lubricating oil tanks shall be complied.

4.7.2.2. Where sounding pipes are fitted with self-closing valves and their height is at least 0.5 m above the floor level, these pipes of fuel oil and lubricating oil tanks are allowed to be laid to positions above the machinery space floor plates. Self-closing test cocks shall be fitted below the above-mentioned self-closing valves. The said pipes shall not be used as air pipes.

4.7.2.3. For welded-on striking plates or other strengthening to protect the bottom plating from damage by sounding rod, provision shall be made under the open ends of sounding pipes.

Adequately strong closing plugs shall be provided in case of slotted sounding pipes with closed ends.

4.7.2.4. The internal diameter of sounding pipes shall not be less than 25 mm. Name plates are required to be attached to the upper ends of sounding pipes.

4.7.2.5. Tight plugs are required to be fitted on the ends of sounding pipes carried to the exposed deck. Plugs and threaded portions of deck sockets shall be of bronze or brass. In each case, the use of other material is subject to special consideration by INTLREG. In each case, the use of closing means of other types is subject to special consideration by INTLREG.

Self-closing fittings of sounding pipes of the double bottom fuel oil tanks shall not initiate sparks and are required to be corrosion-resistant.

The sounding pipes shall be located at such positions where they cannot be damaged, when they project above the open deck, otherwise they shall have appropriate guards.

4.8. Exhaust Gas System

4.8.1. Exhaust gas piping.

4.8.1.1. As a rule, the exhaust gas pipes shall be laid to the open deck.

4.8.1.2. Provision shall be made for arrangements precluding the possibility of sea water entering the engine, where the exhaust gas pipes are laid through the side plating or transom in the vicinity of the waterline or below it.

A loop shall be arranged inside the machinery space with its upper part located above the deepest waterline.

4.8.1.3. The exhaust gas pipes shall be laid at a distance not less than 450 mm from the fuel oil tanks.

4.8.1.4. An individual exhaust gas pipe shall be provided for each main engine. Departures may be allowed, where required, subject to special consideration by INTLREG.

The common exhaust gas pipeline shall be fitted with reliable devices precluding gases of the common line entering the pipes of the engines not actually in work as well as damage of any of the engines when started, where the exhaust gas pipes of auxiliary engines are connected to a common exhaust gas pipeline.

The exhaust gas pipes of the main and auxiliary engines may be permitted to be connected to a common exhaust line provided that the foregoing precautions are taken, in craft intended for operation in offshore areas of navigation.

4.8.1.5. The gas exhaust pipes of the internal combustion engines are generally be made of steel.

The exhaust gas pipelines of the engines with “wet” exhaust or when the exhaust gases are cooled by the engine cooling water can be completely or partly manufactured of plastic pipes or flexible hose.

4.8.1.6. By means of suitable insulating material or double walls, the exhaust gas pipes of the internal combustion engines are required to be thermally insulated. The temperature of the insulation surface shall not exceed 60 °C.

The material used for thermal insulation is required to be noncombustible.

The surface of the insulating material shall be oil- and oily vapor-impermeable, in machinery space.

If the temperature of the pipe surface does not exceed 60°C, the exhaust gas pipes with “wet” exhaust or double walls cooled by water may not be insulated.

4.8.1.7. Thermal compensators shall be fitted for the exhaust gas pipes of engines.

4.8.1.8. An enclosed protective casing shall be provided to exhaust gas pipes which are passing through accommodation spaces or the wheelhouse. The interspace between the exhaust gas pipes and protective casing shall communicate with the open atmosphere.

4.8.2. Silencers, spark arresters and heat exchangers.

4.8.2.1. The exhaust gas pipes shall be generally fitted with silencers and, whenever necessary, with spark arresters.

4.8.2.2. The silencers and spark arresters are required to be arranged in such a way so that it permit cleaning or draining of tar and condensate from the nearest pipeline portion, and shall be provided with appropriate hand-holes or drain cocks and plugs.

4.8.2.3. The arrangements shall be provided to prevent possible ingress of water into the engine due to leakages in the heat exchangers or damage thereof, where waste heat-exchanging apparatus are installed.

4.9. Ventilation System

4.9.1. Ventilation ducts and ventilation heads. Air inlets.

4.9.1.1. Ventilation ducts shall not be laid through watertight bulkheads below the bulkhead deck (main deck).

4.9.1.2. Trunkways and vertical ducts of ventilation system shall be watertight and equivalent in strength to adjacent hull structures within a single watertight compartment below the bulkhead deck when they pass through watertight decks.

4.9.1.3. The ventilation ducts shall be fitted with steel fire dampers installed generally on the bulkheads, where they pass through the main fire-retarding bulkheads. The fire dampers shall be capable of being locally closed from both sides of the bulkhead.

Places shall be readily accessible and painted red where dampers and their driving gear are installed. Indicators are required to be provided to show whether the damper is open or closed. The duct between the bulkhead and the damper shall have insulation corresponding to the degree of fire integrity of the bulkhead, where the damper is not installed on the bulkhead.

4.9.1.4. To preclude movement of gas, the ventilation ducts leading to machinery and other spaces fitted with fire smothering facilities shall have closing arrangements. The inlets and outlets of the ventilation systems of these spaces shall be provided with tight covers or closing arrangements and, where they are arranged in the said spaces, also with actuators for closing them from positions outside the spaces fitted with fire smothering facilities.

4.9.1.5. The ventilation ducts shall be properly insulated in places of possible sweating. Drain plugs are required to be provided for portions of ducts where water is likely to accumulate.

4.9.1.6. It shall be ensured that the risk of drawing in air contaminated by gas, oil vapors, etc. is minimized and admission of sea water into the ventilation ducts is precluded by appropriate location of ventilation heads of supply ducts and air inlets of ventilation system.

The ventilation ducts shall be protected against penetration of snow on ice-strengthened craft.

Air intakes are recommended to be arranged on both sides of the craft and to provide them with heating arrangements also.

4.9.1.7. In accordance with [4.9.1.9], provision shall be made for closing all the main air inlets and outlets of ventilation systems of spaces.

4.9.1.8. Ventilators to spaces below the freeboard deck are required to be fitted with strong coamings.

The requirements of chapter-3 shall be met by the construction of the coamings.

Thickness of the metal coaming shall not be less than the thickness of the deck in way of the coaming.

4.9.1.9. In accordance with Chapter-4, [9.2.2] and [9.2.4], the requirements for the closing arrangements of the air inlets and outlets and for the height of their coamings shall be consistent.

4.9.1.10. Galley ventilation systems shall be separated from ventilation systems serving other spaces.

Steel shall be used for the construction of exhaust ducts from galley ranges where they pass through accommodation spaces or spaces containing combustible materials. Each exhaust duct shall be fitted with a readily removable grease trap and with a fire damper located in the lower end of the duct.

4.9.2. Ventilation of machinery spaces.

4.9.2.1. Under all service conditions including heavy weather, the ventilation of machinery spaces shall be such that a supply of air is maintained which is sufficient for operation of machinery at full load as well as for the safety and comfort of the attending personnel.

The ventilation are required to ensure the removal of gases heavier than air from the lower zones of those spaces such as, from below floor plates, from where daily tanks and fuel system equipment are installed.

To disable the artificial ventilation from a readily accessible position outside the machinery space, provision shall be made.

4.9.2.2. In addition to the natural supply ventilation, enclosed machinery spaces in which carburetor (petrol) engines are installed, shall be fitted with forced exhaust ventilation ensuring at least 10 air changes per hour, proceeding from the volume of empty spaces.

A fan of intrinsically safe design shall be used for the forced exhaust ventilation. The electric motor shall be of safe type or located outside the exhausted air flow.

The natural ventilation ducts shall have the cross-sectional area:

$F = 40\,V$, cm^2, but not less than 45 cm^2

Where: V = volume of empty space, m^3.

4.9.2.3. Natural supply-exhaust ventilation with separate supply and exhaust ducts shall be provided in enclosed spaces where carburetor (petrol) engines and petrol tanks or canisters with fuel are installed.

In accordance with the formula as given in [4.9.2.2], the ducts shall have cross-sectional area not less than that determined.

4.9.2.4. Natural supply-exhaust ventilation ensuring removal of air from the upper zone of the ventilated space shall be provided for spaces for portable canisters with petrol.

Into the lower part of the ventilated space, the inlet air shall be supplied.

The cross-sectional area of the ventilation ducts shall be at least 20 cm^2.

Where issuing gases do not present a fire hazard, the discharges of the exhaust ducts shall be carried to such places.

4.9.3. Ventilation of accumulator battery rooms and boxes.

4.9.3.1. An independent ventilation system capable of removing air from the upper part of the ventilated spaces shall be provided for the accumulator battery rooms and boxes. The exhaust ducts are required to be gastight.

4.9.3.2. Into the lower part of the ventilated space, the inlet air shall be supplied.

4.9.3.3. To prevent penetration of sea water, atmospheric precipitation and solids, the outlets of ventilation ducts shall be constructed accordingly.

No flame arresting fittings shall be installed. The discharges of the exhaust ducts shall be carried to places where issuing gases do not present a fire hazard.

4.9.3.4. To ensure removal of gases from the boxes of accumulator batteries having a charging capacity not over 0.2 kW may be ventilated through the openings in the lower and upper parts of the box.

4.9.3.5. In accordance with the following formula, the rate of air flow, Q, in m^3/s, for the ventilation of an accumulator battery room or box shall not be less than that determined:

$$Q = 3.06\ I \cdot n \cdot 10^{-5}$$

Where:

I = maximum charging current during gas emission, but not less than 0.25 of the maximum current of the charging device, A;

n = number of battery cells.

4.9.3.6. In case of natural ventilation of accumulator battery rooms and boxes, the cross-sectional area, F, in m^2, of the duct, shall not be less than that determined by the formula:

$F = 1.04\ Q$, but not less than 0.004 m^2

Where: Q = rate of air flow determined by the formula in [4.9.3.5].

4.9.3.7. In the following cases, natural ventilation of the spaces may be used:

a) Required amount of air calculated by formula in [4.9.3.5], is less than 2.36×10^{-2} m^2/s;

b) Number of bends of the duct does not exceed two;

c) Angle of the duct deflection from the vertical is 45°;

d) Operation of the ventilation system does not depend on the direction of the wind;

e) Length of the duct does not exceed 5 m;

f) Cross-sectional area of the duct is taken not less than that determined by formula in [4.9.3.6].

The accumulator battery room shall be provided with forced exhaust ventilation, where the rate of air flow determined by formula in [4.9.3.5] is 2.36×10^{-2} m^3/s and over.

The internal surfaces of exhaust ducts and fans are required to be protected against the action of the electrolyte.

In way of gas exhaust, the motors of fans shall not be located.

In accordance with the requirements of Part-6, Ch-3, Sec-6, [6.17], the construction of fans shall be complied.

4.10. Fuel Oil System

4.10.1. Pumps and Piping laying

4.10.1.1. A power driven fuel oil transfer pump and a standby pump which may be a manual pump are required to be provided for fuel oil transfer.

Any suitable pump, including the fuel oil separator pump may be used as a standby pump.

One pump may be installed on craft intended for operation in offshore areas of navigation.

A manual pump is allowed on craft with daily consumption of fuel oil less than 1000 kg.

4.10.1.2. Provision shall be made for reliable arrangements disconnecting the ballast system from these tanks when carrying fuel oil and also the fuel oil system when containing water ballast, where fuel oil tanks are regularly used also for water ballast.

4.10.1.3. Along with local control, the fuel oil transfer pumps and separator pumps shall be provided with stopping means operable from always accessible positions outside the spaces where the pumps are installed.

On the pressure side and suction side of fuel oil pumps, shut-off valves are required to be fitted.

4.10.1.4. Laying of diesel oil piping.

a) In accordance with the requirements of [4.2.1], [4.2.2], [4.2.3], [4.2.5], the diesel oil pipes, their fittings and joints shall be complied.

The fuel oil pipes are required to be properly secured and protected against mechanical damage.

b) The fuel oil pipelines shall not be laid above the internal combustion engines, exhaust gas pipes; electrical switchboards and control panels and also shall have no communication with other piping systems.

It is allowed to lay fuel oil pipes above the said equipment in exceptional cases, provided that in these positions the pipes have no detachable joints.

c) Such pipes may be carried at a distance not less than 500 mm from the fronts and sides of the switchboards and control panels, provided that:

- At a distance of 1000 mm from switchboards and control panels no detachable joints are used,

  Or, the joints have protective casings,

- Trays are installed in appropriate positions to prevent the spillage of fuel oil on the equipment or sources of ignition.

d) Where such tanks are located outside the double bottom, the fuel oil suction pipes from tanks of more than 50 l in capacity, as well as the pipes intended to equalize the level of fuel in tanks, shall be provided with shut-off valves fitted directly on the tanks. These valves shall be capable of being closed from always accessible positions located outside the space containing the tanks.

e) Daily service and settling tanks shall be fitted with self-closing valves and pipes connected to drain tanks for draining water.

The drain pipes are required to be fitted with heat-resistant sight glasses. Open funnels may be used instead of sight glasses where trays are available.

f) Where there is a possibility of fuel oil leakage the tanks, pumps, filters and other equipment are required to be fitted with drip trays.

Drain pipes from the drip trays shall be laid into the fuel oil drain tanks.

The internal diameter of the drain pipes shall be at least 25 mm.

Drainage of fuel oil into the bilges is not permitted.

Drip trays may be fitted with plugs or local drain pipes with shut-off devices enabling the fuel oil leaks to be collected in portable tanks, on craft intended for operation in offshore areas of navigation.

g) In case, when the tank is filled to 80 per cent of its volume, the drain tanks are required to be fitted with an alarm sensor to give warning.

Structural precautions shall be made to prevent water from one flooded compartment to enter the other compartment via the open ends of drains, if the drain pipes from drip trays or tanks fitted in different watertight compartments are laid into common drain rank.

4.10.1.5. Petrol piping.

a) Compliance with the requirements of [4.10.1.4] (a) & (b) is mandatory.

b) The fuel oil pipeline shall be accessible for inspection over its entire length. The number of detachable joints shall be kept to a minimum. Pipe joints shall have no gaskets.

c) Daily service and settling tanks shall be fitted with self-closing valves and pipes connected to drain tanks for draining water. Drain pipes shall be fitted with heat-resistant sight glasses. Water from the daily service tanks shall be drained into a portable tank fitted with flame-arresting screen, where drain tanks are unavailable. In this case, the self-closing valve shall be fitted with a dome nut on the draining end.

4.10.2. Arrangement of fuel oil tanks.

4.10.2.1. Arrangement of fuel oil tanks intended for fuel oil with a flash point not lower than 55 °C (diesel oil).

a) The fuel oil tanks shall be integral with the hull in general, and as far as possible, located outside the machinery spaces.

Other than the double bottom tanks, where the fuel oil tanks are arranged adjacent to, or within, the machinery space, their surfaces in the machinery space shall be as small as possible and shall preferably have a common boundary with the double bottom tanks.

The fuel oil tanks shall not contain fuel oil with a flash point below 60 °C, where they are arranged within the machinery space.

The fuel oil tanks shall not have common walls with the fresh water storage tanks.

b) On oil-tight drip trays, the fuel oil tanks and independent fuel oil tanks shall be placed.

4.10.2.2. Arrangement of fuel oil tanks intended for fuel oil with a flash point below 43 °C.

a) Storage of fuel oil shall be done only in independent tanks that are located in a separate compartment isolated from the machinery space and accommodation compartments by a gas-tight bulkhead and provided with independent natural ventilation which confirms removal of fuel vapors from any point of the compartment.

b) Each tank and compartments shall be fitted with an air pipe laid to the exposed place on the deck, in which the tank is located.

Air pipes of the compartment and tanks shall be separated.

Outlets of the air pipes shall be fitted with permanently attached heads with double flame-arresting screens and a float. The requirements of [4.7.1.3] shall be met by the height of air heads.

c) In superstructures as well as in other exposed places, the fuel oil tanks located in exposed machinery spaces (compartments) shall be protected against the action of sunrays.

d) The fuel oil tanks shall be earthed by connection to engine seating or earth plate.

e) Carbon dioxide or aerosol fire extinguishing system shall be provided for enclosed compartment in which independent petrol storage tanks are installed.

f) Fuel oil tanks delivered complete with outboard engines are required to be appropriately secured in order to avoid displacement thereof and damage to fuel oil pipe or flexible fuel oil hose.

4.10.2.3. Fuel oil tanks.

a) Fuel oil tanks are required to be made of carbon steel, corrosion resistant steel or aluminium alloys.

On aluminium fuel oil tanks, copper-base alloy fittings shall not be installed.

b) The wall thickness of the fuel oil tanks shall not be less than that as given in Table 5.4.7.

In accordance with the requirements of Chapter-3, Section-2, materials used for manufacture of the fuel oil tanks shall be complied.

In each case, the use of other materials is subject to consideration by INTLREG.

Table 5.4.7

Tank capacity, dm^3	Minimum wall thickness, mm		
	Carbon steel	Corrosion resistant steel	Aluminium alloy
< 100	2 (see note)	1	2
100 – 200	3	1.5	3
200 – 500	4	2	4
500 – 1000	5	3	5
NOTE: For externally galvanizes tanks 1.5 mm may be allowed.			

c) The inner surfaces of the fuel oil tanks shall not be painted or galvanized. The outer surface of the fuel oil tanks are required to be efficiently protected against corrosion.

The fuel oil tanks shall be designed and installed so that no exterior surface will trap water.

d) Fastenings of the fuel oil tanks made of aluminium alloys shall be manufactured of aluminium alloys or corrosion-resistant steel.

e) The fuel oil tanks shall be so designed as to withstand test pressure not less than 0.02 MPa. Tanks shall be reinforced or have internal bulkheads, whenever necessary.

f) All fittings and openings shall be on top of petrol tanks, wherever possible.

Nevertheless, welded pads shall be used for direct mounting of the fittings on the tank side, where fittings are installed on the sides.

g) The fuel oil tanks shall have manholes for inspection of the interiors:

- 150 mm in diameter – for tanks from 50 up to 500 dm^3 in capacity;
- 350 x 450 mm – for tanks over 500 dm^3 in capacity.

h) To determine fuel level or quantity, a means shall be provided for each fuel oil tank.

(i) Diesel oil tanks may be fitted with sounding pipes or column-type sight gauges.

The column-type sight gauges shall have transparent, unbreakable inserts which are made of artificial material or glasses retaining their properties under effect of fuel.

Between the level indicator and the lower part of the tank, a self-closing shut-off valve shall be installed. Such device shall be also installed in the upper part of the tank, if the level indicator is connected with the tank below the highest possible liquid level.

In each case, the use of other level gauges is subject to consideration by INTLREG.

(ii) The petrol tanks shall be provided with a level detector with an indicator installed in the conning station. The detector shall be of an intrinsically safe design.

i) In compliance with the requirements of ISO 21487:2006, diesel oil and petrol tanks may be used.

4.10.2.4. The fuel oil tanks located away from any accommodation spaces. The air interspace between the fuel oil tank and accommodation space shall be effectively ventilated.

The fuel oil tanks located in machinery space (as given in chapter-7, [1.2.1]) are required to be made of steel or equivalent material.

4.10.3. Filling of fuel oil storage tanks and portable canisters.

4.10.3.1. It is required that the bunkering of the craft shall be carried out through a permanent pipeline provided with fittings which are necessary for filling of all the basic fuel oil storage tanks.

The suction pipes shall ensure the filling of fuel oil tanks of any of the hulls as well as transfer of fuel oil from the tanks of one hull into the tanks of the other, on multi-hulled craft.

With a clearance not less than 1/4 of the internal diameter of the pipe, the end of the filling pipe are required to be carried to the tank bottom.

4.10.3.2. To prevent spillage of fuel oil due to leakage from the filling pipe, the bunkering point are required to be protected by coamings.

The suction pipe shall have reliable closing arrangements. In case, where deck sockets are used as fuelling arrangements, they are required to have a plug made of copper-base alloys.

4.10.3.3. The filling pipes of tanks located above the double bottom, as well as filling pipes of the double bottom tanks shall be connected to the tanks near the top. Where this is impracticable, the filling pipes shall be fitted with non-return valves installed directly on the tanks.

The non-return valve shall be replaced by a remote-controlled shutoff valve operable from an accessible position outside the space in which the tank is located, when the filling pipe is used as a suction pipe.

4.10.3.4. The petrol suction pipe shall ensure electrical conductance from the suction socket up to the tanks being filled.

4.10.3.5. A readily accessible water separator are required to be fitted for the petrol suction pipe, in the absence of which fuelling shall be performed through a funnel with a water separating gauze (with mesh of 0.5× 0.5 mm).

4.10.3.6. Provision shall be made for a branch pipe led to the open deck level for filling of fuel oil tanks located in exposed machinery spaces (compartments), and also shall be provided with a barrier to prevent penetration of fuel oil into the hull.

The branch pipe are required to be fitted with a closing arrangement made of a metal which prevent spark formation, or of non-combustible material resistant to the action of fuel and which does not absorb it.

4.10.3.7. Portable fuel oil tanks which are delivered complete with outboard engines are required to be filled outside the craft.

4.10.4. Fuel oil supply to internal combustion engines.

4.10.4.1. The equipment of fuel oil system shall be cleaned to an extent required for the given engine and capable of supplying fuel oil duly prepared.

4.10.4.2. In machinery spaces or compartments, the system of fuel oil supply to engines shall be permanently installed.

It is recommended that the daily service tanks are required to be fitted with a quick-closing valve which can be remotely operable from a readily accessible position outside the space in which the tank is installed.

4.10.4.3. In accordance with the requirements of [4.1.6.2], the system of fuel oil supply to engines (outboard engines) installed on the craft transom may consist of flexible connections (hoses).

4.10.4.4. The fitting of fuel oil filters in the fuel oil supply lines shall be made in such a way that any filter can be cleaned without interrupting the operation of the engine.

4.10.4.5. Fuel oil supply to carburetor (petrol) internal combustion engines.

a) Compliance with the requirements of [4.10.1.5], [4.10.4.1], [4.10.4.2], [4.10.4.3], [4.10.4.4] is mandatory.

b) The pipeline and fittings are required to be located on the engine side opposite to the exhaust manifold.

c) Quick-closing valve, remotely operable from an accessible position outside the space/area where the tank or canister is installed, shall be fitted with the pipeline from the daily service fuel oil tank (or daily service canister which is delivered complete with the outboard engines) to the engine.

The valve shall be installed directly on the wall of the tank or the daily service canister.

4.11. Lubricating Oil System

4.11.1. Lubricating oil pumps of internal combustion engines, gears and couplings.

4.11.1.1. Provision shall be made for not less than two circulating lubrication pumps, main and standby, of the same capacity, for an installation with one main engine on motor craft for vessels intended to serve on different range of navigations as mentioned in Part 1 Ch 1 Sec 4. One of these pumps can be driven by the main engine.

If the craft has a spare pump, the standby pump may be dispensed with, provided that it is accessible for mounting under operating conditions.

The standby pump may not be installed in sailing-motor and motor-sailing craft.

4.11.1.2. In craft**,** where two and more main engines are installed, each of them shall have its own lubricating oil pump, with provision for one standby pump driven independently and having a capacity sufficient to ensure operation of each engine.

If the craft has a spare pump, the standby pump may be dispensed with, provided it is accessible for mounting under operating conditions.

The standby pump may not be installed in sailing-motor and motor-sailing craft.

4.11.1.3. In accordance with the requirements of [4.11.1.1] and [4.11.1.2] for the main engines, the lubricating oil pumps of main gearing shall be complied, if they are independent of the main engine lubrication system.

4.11.2. Lubricating oil supply to engines and gears.

4.11.2.1. The pipes of the lubricating oil system shall not communicate with other piping systems.

4.11.2.2. The circulating lubrication system shall provide for cleaning of oil and along with that, provision shall be made for cleaning of lubricating oil filters without having to stop the engine and the following filters shall be fitted:

a) One coarse filter (strainer) on the suction pipe of the pump; two parallel filters or one switch-over duplex filter or one self-cleaning filter on the pressure pipe of the main engine pump;

b) Magnetic filter generally on the suction side of the pump of the gears.

The capacity of each filter shall exceed by 10% the maximum capacity of the pump.

4.11.2.3. A pressure gauge indicating pressure of the oil after the filter and before it enters the engine shall be fitted for the lubricating oil system.

A pressure gauge shall be placed at the control station, indicating the pressure of oil after the oil cooler or after the filter before it enters the inboard engine.

4.11.2.4. The requirements of [4.10.1.4(f)] are applicable regarding collection of the lubricating oil leakage.

4.11.3. Lubricating oil tanks**.**

4.11.3.1. The lubricating oil tanks are required to be separated from the fresh water tanks.

4.11.3.2. Provision shall be made for a spare tank with a capacity sufficient for filling the system with oil to the working condition.

The tank shall be situated outside the double bottom.

The spare tank may be dispensed with, in sailing-motor and motor-sailing craft.

4.11.3.3. The suction pipes from the tanks are required to be fitted with shut-off valves installed directly on the tanks.

4.11.3.4. The requirements of [4.10.2.1(a)] and [2.7.2] shall be met for the lubricating oil tanks situated in machinery spaces.

4.12. Cooling Systems of internal combustion engines

4.12.1. Pumps.

4.12.1.1. The water cooling system of main engines shall comply with the following requirements:

a) In one main engine, the sea water cooling system shall include two pumps, one of which shall be a standby pump. The capacity of the standby pump shall not be less than that of the main pump. At least, one pump shall be independently driven.

If the craft has a spare pump, the standby pump may not be installed, provided it is accessible for mounting under operating conditions.

In accordance with the same requirements, a fresh water cooling system of the main engine shall also be complied.

For both fresh and sea water cooling, one common independently driven standby pump can be used; the capacity of this pump shall not be less than that of the main pumps; and to prevent mixing of fresh and sea water precautions are required to be taken.

The standby pump may be dispensed with, in sailing-motor and motor-sailing craft;

b) To ensure the operation of each engine running at maximum load, one independently driven standby pump shall be installed in sea water cooling system of two and more main engines, each served by a separate cooling water pump.

Where a spare pump is available, no standby pump may be provided which is accessible for mounting under operating conditions.

In accordance with the same requirements, a fresh water cooling system shall also be complied.

For both fresh and sea water, it is permitted to install one common independently driven standby pump, the capacity of which shall be such as to ensure fresh or sea water cooling of any engine; and to prevent mixing of fresh and sea water precautions are required to be taken.

The standby pump may be dispensed with, in sailing-motor and motor-sailing craft;

c) One independently driven pump is permitted to cool several engines and for which the capacity of the pump shall be sufficient for simultaneous cooling of all engines when running at maximum load. One standby pump shall be provided, the capacity of which shall not be less than that of the main pump cooling simultaneously all engines.

A water control valve at inlet to each engine shall be fitted for the cooling pipe;

d) In installations with an automation mark in the class notation provision shall be made for separate fresh water and sea water standby pumps, the capacity of which shall not be less than that of the main pumps.

4.12.1.2. The water cooling system of main engines shall comply with the following requirements:

a) A Main Engine driven pump shall be provided for the sea water cooling system of one main engine. However, provision in this case shall be made for direct sea water cooling of the main engine or for a spare pump available on board, which is accessible for mounting under operating conditions;

b) In the case of two and more engines, the sea water cooling system shall be provided with a separate cooling pump each, driven by the main engine (the standby sea water cooling is not compulsory).

4.12.1.3. The bilge or other general purpose pumps which are operated only for clean water can be used as standby cooling pumps.

If the requirements as contained in chapter-7 are complied, the use of fire pumps is permitted for this purpose.

4.12.2. Piping laying.

4.12.2.1. The water cooling system of the main engines shall be supplied from at least two sea chests: bottom and side or bottom and ice box arranged in engine room and interconnected.

4.12.2.2. In craft of design categories **C** and **C1,** the water cooling system of the main engines may be supplied from one sea chest: bottom, side or ice box.

4.12.2.3. In craft of design categories **C2**, **C3** and **D,** the water cooling system of the main engines shall be provided only with bottom sea inlet fittings complying with the requirements of [4.4.3.1].

4.12.2.4. The water cooling system of the main engines installed on transom is permitted to be separately supplied with sea water.

In accordance with the requirements of [4.4.3.1], the water cooling system of the auxiliary engines is allowed to be separately supplied with sea water only from bottom sea inlets, shall be complied.

4.12.2.5. Filters are required to be fitted on suction lines of sea water cooling system serving the main and auxiliary engines.

Filters are required to be provided with a device which makes sure that there is no pressure, before the filters are opened. Means shall also be provided to enable the filters to be cleaned without having to stop the cooling pumps.

4.12.3. Cooling of internal combustion engines.

4.12.3.1. Provision shall be made for an expansion tank where the level of water is higher than the maximum level of water in the engine, in the fresh water cooling system of the engine. The expansion tank is required to be connected to the suction pipes of the pumps and may be common for the cooling system of several engines.

For monitoring the water level, the tank shall be provided with a device.

In the cooling system of engines, the arrangement of the sea water discharge pipes shall be made in such a way that the highest cooled spaces of engines, water and oil coolers are always filled with water and formation of stagnant pockets is excluded.

4.12.3.2. The cooling fresh water may be cooled in water coolers cooled by sea water, by air flow or in the keel cooling systems, in the cooling system of the internal combustion engines.

4.12.3.3. The cooling system is required to be fitted with thermometers and cooling water temperature control device.

In order to warn of the limit value of the cooling water temperature, it is recommended that suitable alarms are required to be provided.

4.12.4. Keel cooling systems of inboard internal combustion engines.

4.12.4.1. For craft intended to operate between equipped with one main engine, not less than two sea water coolers, one of which is standby, shall be provided.

One standby cooler shall be provided to keep each engine running, in case for craft equipped with two or more main engines.

4.12.4.2. Air discharge arrangement are required be provided for each cooler. Arrangements for drainage of cooling medium from the coolers shall also be provided.

4.12.5. Air cooling system.

4.12.5.1. An engine driven cooling air blower shall be provided for the main internal combustion engines with a direct air cooling system in sailing-motor and motor-sailing craft as well as craft intended for operation in offshore area of navigation with.

A spare cooling air blower and its drive elements shall be provided for the craft, which will make it possible to mount the blower on board under operating conditions.

However, this requirement is not compulsory for auxiliary engines.

In craft which are intended to operate in designated range of navigation as mentioned in Part 1 Ch 1 Sec 4**,** the use of main engines with a direct air cooling system is subject to special consideration by the INTLREG in each case.

4.12.5.2. The released air shall not cause an inadmissible heating of the machinery space atmosphere, in case of internal combustion engines with direct air cooling or with air cooling of the fresh water heat exchanger.

In general, special ducts are required to be provided to lead the exhaust air out to the exposed part of the deck.

4.13. Compressed Air System

4.13.1. Number of air receivers, compressors, amount of starting air and piping laying.

4.13.1.1. The requirements for the number of starting air receivers, compressors and amount of starting air with consideration for all consumers, piping laying shall comply with those set out in Part-5A, Ch-9, in so much as applicable and sufficient unless specified otherwise below, where a craft is provided with main or auxiliary internal combustion engines started by compressed air or by compressed gas from gas bleeding arrangements of the engines.

4.13.1.2. For complete moisture removal, a device is required to be equipped for air receivers. The air receivers shall meet the requirements given in Part-5A, Ch-9, in so much as applicable and sufficient unless specified otherwise below.

4.13.2. Compressed air pipes of pneumatic devices, craft's service consumers, control and automation systems in craft where the engines are not started by compressed air.

4.13.2.1. In case where a whistle or tyfon is provided on board, the capacity of a special air receiver for the whistle or tyfon shall be determined so that the whistle or tyfon will be able to work continuously for 2 min, with hourly performance of compressor being not less than required to provide continuous operation of whistle or tyfon during 8 min.

If air from the air receiver is consumed also for other purposes, the capacity of the air receiver shall be increased as compared with that designed for whistle or tyfon only, with provision for automatic replenishment or signaling means which shall operate as soon as the amount of air in the air receiver is such as required for whistle or tyfon only.

4.13.2.2. As mentioned in [4.13.2.1], where a whistle or tyfon is provided on board, it is allowed to install one independently driven compressor with a capacity not less than required to operate the whistle or tyfon.

The compressor may be attached to the engine or manually driven, where a whistle or tyfon is not provided on board, provided that air receiver can be filled by shore means.

4.13.2.3. The requirements of [4.13.1.2] shall be met by the air receivers.

4.14. Liquefied Gas Systems

4.14.1. General.

4.14.1.1. The application of the requirements of this Chapter shall be made to fixed liquefied gas installations designed to operate at a pressure of 500 mm water g. and consisting generally of one gas cylinder with a gas mass not more than 11 kg, one or several pressure regulators, distribution network and, maximum, two appliances consuming gas simultaneously.

The special consideration by INTLREG is subjected for more complicated systems.

4.14.1.2. Complying with the requirements of this Part of the Rules and manufactured in accordance with the regulations of a competent body, installations of approved type shall be used on board craft. Installations which are not fixed installations may be used only when they meet special requirements prescribed by a competent body.

4.14.1.3. Fuels complying with the requirements of current national standards shall be used on board the craft. These fuels shall be only hydrocarbon liquefied gas termed “propane, butane, propylene, butylene”. Installations working on gas shall in every particular be suitable for use of “propane”.

4.14.1.4. Liquefied gas installations are permitted to use on board the craft for domestic purposes only: cooking, and in water- and air heaters consuming not more than 1.5 kg of liquefied gas per hour. The INTLREG may specially consider the use of liquefied gas for other purposes.

4.14.1.5. In machinery spaces, components of the liquefied gas installations shall not be located.

4.14.1.6. Within cargo spaces, components of the liquefied gas installations shall not be located.

4.14.1.7. Gas-consuming appliances which are separated by the cargo area or integral tank shall not be served by the installation.

4.14.1.8. Openings in deck located at least 3 m from the doors or other closing arrangements of spaces or areas where components of the domestic liquefied gas installations are located shall have coamings of at least 150 mm in height.

4.14.1.9. All the equipment of the domestic liquefied gas installations including gas supply lines which are arranged on board craft, are required to be reliably secured.

4.14.1.10. A warning inscription: “Gas cylinder. Open the valve while the gas cylinder is being used. Close the valve before the flame dies out” are required to be displayed near the gas cylinder.

4.14.2. Liquefied gas cylinders.

In this case, only cylinders complying with the national standards and having filling mass up to 11 kg, are permitted to be installed on board craft.

INTLREG may allow installing cylinders with greater filling mass, in special cases.

4.14.3. Gas-consuming appliances and spaces for their installation.

4.14.3.1. A competent body shall approve all gas-consuming appliances which are installed in craft.

4.14.3.2. To prevent gas leakage effectively in the event of the burner and starter flame-jet failure, the gas-consuming appliances are required to be provided with devices. Such device shall have pilot flame for the water- and air heaters.

Such device may be dispensed with for appliances installed in spaces above the upper deck and operated only in the presence of attending personnel, upon agreement with INTLREG.

4.14.3.3. The water- and air-heaters are required to be fitted with flues designed so as to provide outgoing of the products of combustion outside the craft.

4.14.3.4. Arrangement of the gas-consuming equipment may be done in the wheelhouse only when there are no ducts which would make penetration of gas into the interiors of the craft possible.

4.14.3.5. In accordance with requirements as set out in [2.4], spaces in which the gas-consuming appliances are installed are required to be equipped and also shall comply with the following requirements:

a) They shall be arranged not lower than the upper deck level and have natural ventilation ensuring effective removal of the products of combustion and the air exchange and having no shut-off arrangements on ventilation ducts and air gratings.

Installations with cylinders having capacity less than 3 kg of liquefied gas may be located below the deck in accommodation spaces, provided that the gas appliance is mounted directly on the cylinder or is connected with the cylinder by a flexible gas supply line of no more than 1.5 m in length, and the cylinder

is arranged so as to provide free and fast access to the valve which cuts off supply of gas;

b) They shall have an access to exposed deck and a pivoted side scuttle (window). If the pivoted side scuttle or door opening directly onto the exposed deck are located in an adjacent uninhabited space or corridor then the pivoted side scuttle (window) may not be provided in galley;

c) In the lower part of the heater space, provision shall be made for an air grating with cross-sectional area not less than 0.02 m^2 for each heater;

d) Where a space, even if partially, is located below the upper deck, are required to be provided with forced ventilation and a hood shall be fitted above the gas range;

e) A powder or carbon dioxide fire extinguisher are required to be installed near the entrance to the space of gas-consuming appliances;

f) Bulkheads and decks shall be tight; sills of the door openings shall be not less than 150 mm high. Installation of ladders and lifts from these spaces to under-laying spaces is not permitted;

g) Height of the space shall be not less than 2.2 m.

The height of the spaces may be reduced to 1.9 m, where an exhaust hood which extends beyond the overall dimensions of the range is fitted;

h) A warning label shall be affixed in a conspicuous position which shall provide instructions for operation and maintenance and safety precautions.

4.14.3.6. From the gas appliances to the bulkheads, the distance shall not be less than 75 mm.

4.14.4. Distribution station

4.14.4.1. The distribution station shall be located on the open deck in a special locker or in a gastight enclosure of the superstructure with a door which shall be opened from the outside, from the exposed deck.

a) Structural measures shall be taken to prevent elevation of the temperature of the cylinders located at the station above 40°C, whenever necessary.

b) Gas leakage shall not present a risk of its penetration into the inner spaces of the craft or its contact with the potential sources of ignition.

c) Artificial illumination shall not be provided; in exceptional cases, the station shall be illuminated by approved electric safety-type lamps, in this case the switch shall be fitted on the outside of the station.

d) The distribution station shall be adequately ventilated via the openings in its upper and lower parts.

e) A clearly visible inscription “DANGER. GAS” and a cryptogram (symbol) warning of explosion hazard and prohibiting use of open flame shall be displayed on the outside of the station or on the door.

f) The manufacturing of special locker of the distribution station shall be made of non-combustible material and shall not be located near the bulwark.

4.14.4.2. The distribution station shall comply with the following requirements, depending on the number of the cylinders installed:

a) In case, where one cylinder connected to the network is installed; a rubberized fabric hose with metal clamps to ensure tightness and security of coupling can be used in order to connect a pressure-reducing valve placed on the cylinder head to the liquefied gas pipeline. One spare cylinder may be installed at the station;

b) In accordance to (a) above, where two cylinders connected to the network are installed, one of which is used as a daily service cylinder and the other is used as a standby cylinder, both the cylinders shall be connected to the distribution network manifold. In this case, a shut-off valve or cock shall be fitted between each cylinder and manifold. A notice prohibiting simultaneous use of both cylinders shall be displayed at the station. One spare cylinder may be installed at the station.

4.14.4.3. The cylinders installed on board the craft shall bear brands of competent authorities, as well as information on the kind of gas contained and the date of hydraulic tests by proof pressure.

4.14.4.4. The liquefied gas cylinders are required to be installed vertically, with their valves faced upwards, in special housings made of material precluding spark formation and shall be secured to the station structures by means of quick- detaching joints.

4.14.4.5. The distribution station shall not contain equipment which is not associated therewith.

4.14.4.6. Meeting the requirements of [4.14.4], the spare and empty cylinders shall be stored in locker or in an enclosed space.

4.14.5. Liquefied gas piping and fittings.

4.14.5.1. Liquefied gas piping shall consist of seamless steel or copper pipes with inside diameter not less than 6 mm.

4.14.5.2. In accordance with the requirements of columns 2 or 5 of Table 5.4.3, the wall thickness of pipes shall be complied.

4.14.5.3. The pipe joints are required to be welded. Threaded or flanged joints shall be allowed only at connections of instruments, gas-consuming appliances and fittings.

4.14.5.4. Inside the distribution station, a shut-off valve or cock operable from a position outside the space shall be installed on the pipeline, near its way out from the station.

A second shut-off valve or cock shall be installed outside the station where the pipeline leaves the station, if such arrangement is impracticable.

4.14.5.5. The pipelines from the distribution station to gas consumers shall be laid on the open deck and protected against mechanical damage.

The liquefied gas pipelines shall not pass through accommodation, service and machinery spaces.

4.14.5.6. Each branch line from the common pipeline to the consumer shall be fitted with shut-off fittings, where several gas consumers are available on board the craft.

4.14.5.7. Pressure-reducing valves fitted in the system are required to be designed in such a way so that it provides a pressure of gas delivered to the consuming appliances not higher than 0.005 MPa.

The intermediate pressure shall not be higher than 0.25 MPa, where double-stage pressure-reducing valves are used.

The pressure-reducing valve or the first stage of pressure reduction which is a constituent of the double-stage pressure-reducing valves shall be fitted at the distribution station. The valve shall be fitted on the pipeline section between the cylinder and shut-off valve and attached to the station bulkheads or manifold.

4.14.5.8. In readily accessible positions, the pipeline shut-off valves shall be fitted. The shut-off valve are required to be provided with a limiting device which allows it to rotate through 90° and with an indicator of “open” and “closed” positions.

4.14.5.9. All the fittings shall be made of bronze, brass or another corrosion-resistant material.

4.14.6. Testing of the liquefied gas installation.

4.14.6.1. The liquefied gas pipes from the cylinders to the pressure-reducing valves shall be tested as follows:

- in shop – by hydraulic pressure of 2.5 MPa;
- on board – by air pressure of 1.7 MPa.

After installation on board the craft, the liquefied gas pipes from the pressure-reducing valves to gas consumers shall be tested for tightness by air with an excessive pressure of 0.02 MPa.

4.14.6.2. Once mounted on board the craft, the whole liquefied gas installation shall be tested for tightness while the system is subjected to a normal working pressure.

The test is required to be carried out with the use of soap solution; no gas seepage shall be observed.

4.14.6.3. Examination to be done for the normal operation of the gas-consuming appliances, including the arrangement used to cut off gas supply to the consuming appliance.

4.15. Air heating installations and space heating appliances

4.15.1. Air heating installations.

4.15.1.1. The air heating installation is an installation intended to heat air, wherein the air is heated while passing through the combustion chamber of the air heater.

4.15.1.2. In accommodation and service spaces, the air heaters shall not be located.

The spaces containing air heaters shall be considered as machinery spaces of Category A; the air to be heated shall be taken in from outside of the machinery spaces. Protected from penetration of spray and precipitation shall be provided for air intakes of the air heaters located on exposed areas of the deck.

4.15.1.3. In the air heater combustion chambers, the heat exchangers shall be tight and tested by a pressure not lower than 0.1 MPa.

4.15.1.4. Ventilation ducts for hot air and pipes for carrying off the combustion products shall be made of steel or of a material equal to steel in fire resistance. For carrying off the combustion products, no shut-off fittings are required to be installed on pipes.

4.15.1.5. Combustion air shall be supplied by an independent air blower. The furnace chamber shall be pre-ventilated with the use of the air blower during at least 5 s, before the burner of the air heater is alight.

4.15.1.6. In accordance with the requirements of [4.10], the pipes for air supply to the air heaters shall be complied. The possibility of fuel oil coming into contact with the hot air and outgoing gas pipes shall be prohibited.

4.15.1.7. Fuel oil supply to the air heater shall be cut off automatically in case of:

- electric power loss;
- burner flame -jet cut-off;
- temperature of the air heated exceeding the pre-determined limit;
- loss or low head of combustion air.

The air heater shall be capable of being actuated only locally upon operation of protective devices.

4.15.1.8. Provision shall be made for fuel oil supply, hot air blowers and combustion air supply cutting off from two positions, one of which shall be located outside the machinery space.

4.15.2. Space heating appliances.

4.15.2.1. All space heating appliances are required to be designed and arranged in such a way that they cannot cause ignition of equipment, as well as clothes and baggage of people present in the space.

4.15.2.2. The space heating appliances shall be located at a distance at least 50 mm from the craft sides or from the bulkheads. The areas where the space hating appliances are located shall be protected by thermal insulation of non-combustible material, if the sides or bulkheads are lined with wood, veneer or with another combustible material.

The heating appliances shall be located at least 150 mm away from the wooden, veneer or another combustible lining, with no thermal insulation.

CHAPTER 6 ELECTRICAL INSTALLATION AND CONTROL

CONTENTS

SECTION 1 ELECTRICAL EQUIPMENT

Contents

1.1. General

1.1.1. Application

1.1.1.1. The present Part of the Rules deals with the requirements to electrical installations in craft in reference to 1.2 of the General Requirements as well as to individual types of electrical equipment in reference to 1.3 of the regulations. In the general regulation, 1.2 refers to the craft's main subject to the Register technical supervision.

1.1.1.2. **T**he present Part of the Rules deals with the fixed electrical systems and equipment. The Use of portable electrical systems and equipment is subject under the special discretion of the Register.

1.1.1.3. In compliance with national standards, the electrical equipment not stated in 1.3 shall be designed and manufactured in such a way that its fault does not result in fire or electric shock.

1.1.1.4. If the power supply system which is used to supply domestic services of a voltage higher than the safety voltage, then the additional requirements of Section 10 shall be complied with.

1.1.1.5. It is required to comply with the appropriate requirements of Part 6 "Electrical Equipment" of the Rules for the Classification and Construction of Sea-Going Ships along with the requirements of "Inland Rules" for the Classification and Construction of Inland Navigation Ships (where the power supply system with a voltage higher than the safety voltage is used to supply appliances which can affect the safety of navigation and maneuverability of the craft of design). For this **R, R20,R100, R200, R300 B, C** or **C1** and for the craft of design **C2, C3** and **D** is categorized.

1.1.1.6. Except for the requirements of 1.3.3, the requirements of the present Part of the Rules do not deals with the electrical equipment for domestic, day to day use and processing purposes.

1.1.2. Definitions and explanations

1.1.2.1. For the purpose of the present Part of the Rules, the following definitions and explanations have been adopted:

Emergency Lighting is lighting of the craft's spaces and zones, as well as the survival craft embarkation stations and over the sides by means of luminaires fed from the emergency source of power or from the emergency transitional source of power.

Emergency Source of Electrical Power is a source of electrical power intended to supply necessary craft's services in case of power failure on the main switchboard.

Emergency Switchboard is a switchboard intended to be supplied directly from the emergency or emergency transitional source of electrical power in case of failure of the main source of electrical power, and to supply the emergency services.

Safety Voltage is any voltage not dangerous to the personnel. This condition is considered to be satisfied if the windings of transformers, converters and other devices to step down voltage are electrically separated and if the value of stepped-down voltage across these devices or sources of electrical power does not exceed:

- 50 V between poles for direct current;
- 50 V between phases or between phases and the craft's hull for alternating current.

Shaft generators are generators driven by the non-reversible main machinery and supplying the craft's electrical mains or separate consumers.

Wind-Powered Generator is a generator driven by the non-reversible machinery using a wind power and supplying one or several accumulator batteries in flotage.

External Source of Electrical Power is a source of electrical power located outside the craft and intended to supply all electrical devices and systems essential for maintaining the craft in ready-for-use condition during lay-up, repair and in other navigational or operational cases, without resorting to the emergency source of electrical power.

Main Switchboard is a switchboard intended to be supplied directly from the main and external source of electrical power, and to supply the craft's services.

Accessible is capable of being reached for inspection without the use of special tools.

Earthing is electrical connection of a part of electrical equipment to be earthed to the craft's hull.

Protection is permanent protection of one or several insulated conductors by means of insulating tape, rubber and plastic sheaths or thermo-sensible tubes.

Lightning Protection Zone is the area, within the limits of which the craft's space is substantially immune to direct strokes of lightning.

Craft's Hull means all craft's metal parts which have a reliable electrical connection to the outer metal shell plating.

Air-termination Network is the upper part of the lightning protection device intended for the perception of atmospherics.

Distribution System is a system of components intended for distribution of power in the craft and/or for control, such as contactors, relays, fuses, instruments, pilot lamps.

Solar Battery is a special assembly of crystals, which converts luminous energy to electrical power and supplies one or several accumulator batteries in flotage.

Main Source of Electrical Power is a source of electrical power intended to supply all electrical equipment and systems essential for maintaining the craft in normal operational and habitable condition, without resorting to the emergency source of electrical power.

Down Conductor is a conductor, which electrically connects the air terminal to the earthing conductor.

1.1.3. Scope of technical supervision

1.1.3.1. In the General Regulations and in Part 1“Classification and Surveys”, general provisions related to the classification procedures, technical supervision at the time of construction of craft, manufacture of equipment, and to surveys, as well as the requirements for technical documentation are stated.

1.1.3.2. It is required to do the Technical supervision of craft on board for the following kinds of equipment, systems and devices:

- sources of electrical power;
- distribution systems;
- electric drives of the craft’s machinery;
- electric lighting;
- navigational lights;
- alarm systems and internal communication;
- cable system;

And at the Register’s request supervision can be done for some other items which are not listed above, .

1.1.3.3. The electrical equipment for domestic, processing purposes equipment shall be subject to technical supervision on board the craft only in respect to:

a. Effect exerted by operation of that equipment on the performance of the craft’s electric generating plant;
b. Choice of the types and cross-sections of cables and conductors, as well as of

the methods of cable laying;

c. Resistance of insulation, earthing and protective devices.

1.2. General requirements

1.2.1. Arrangement of electrical equipment

1.2.1.1. The installation of Electrical equipment shall be done in such way so that it can provide easy access to controls and to all parts that need maintenance, inspection and replacement.

1.2.1.2. Electrical equipment in its locations shall be provided with efficient protection against the temperature elevation caused by the external sources of heat in order to avoid excess of the temperature permissible for its safe operation.

1.2.1.3. The position of the air-cooled electrical equipment shall be so placed in such manner that cooling air is not taken from spaces wherein the air may be polluted with substances and can cause of harmful effect on insulation.

1.2.1.4. The position of Electrical equipment shall be fixed in such a manner that the strength and tightness of decks, bulkheads and hull plating is not damaged.

1.2.1.5. Attachment of Electrical appliances shall not be done directly to the walls of fuel tanks. The distance from these appliances to the walls of tanks shall be more than 75 mm.

1.2.1.6. It is mandatory to install the generators, starters and other electrical devices attached to the internal combustion engines as far away as practicable from the fuel system.

1.2.1.7. An electrical system diagram showing all electrical circuits and arrangement of electrical devices with identification of conductors used, contactors, switches, relays and fuses, along with the description of the symbols used shall be provided in the craft.

1.2.1.8. In craft's spaces where the electrical equipment is installed shall be of safe- type as flammable gases are likely to accumulate there.

1.2.1.9. Particularly when the enclosures of electrical equipment are built from different material than the structures on which they are fixed, it is needed to take care in order to prevent electrolytic corrosion.

1.2.2. Operating conditions

1.2.2.1. In Table 6.1.1, the rated working ambient air and cooling water temperatures for electrical equipment is specified.

Table 6.1.1					
Nos	Location of equipment	Ambient air and cooling water temperature, °C			
		Craft of design categories R, R100, R200 R300 and B		Craft of design categories C, C1, C2, C3 and D, navigating outside the tropical zone	
		Air	Water	Air	Water
1	Machinery and special electrical spaces, galleys	+45…0	+32	+40…0	+25
2	Exposed decks	+45…-25	-	+40…-25	
3	Other spaces	+40…0	-	+40…0	-
N o t e. Electronic elements and devices designed for mounting in the switchboards, panels or casings shall be capable of reliable performance at an ambient air temperature up to 55 °C. Temperature up to 70 °C shall not cause failure of the elements, devices and systems.					

1.2.2.2. Under the below stated conditions, electrical equipment shall be capable of rendering satisfactory performance :

at a relative air humidity of 80 ± 3 per cent and at a temperature of +40 ± 2 °C;

at a relative air humidity of 92 ± 3 per cent and at a temperature of +25 ±2 °C.

In craft which is operating under winter conditions, the electrical equipment shall be adjusted for use at the temperatures down to – 25 °C. The ambient temperature, for electrical equipment installed within environmentally controlled spaces may be reduced as against the value given in Table 2.2.1 and maintained at a value not less than + 35 °C, provided:

a. For emergency purposes the equipment cannot be used and shall be positioned outside the machinery spaces;
b. The temperature control is achieved by at least two cooling units and shall be arranged in such manner that in the event of loss of one cooling unit, the remaining unit(s) is(are) capable of sustaining the design temperature;
c. It is required that the equipment installed in such spaces where it shall be able

to work safely at a temperature of +45 °C until the rated working ambient temperature can be attained. The cooling equipment shall be rated for +45 °C ambient temperature;

d. In order to indicate any failure of the cooling units, audible and visual alarms shall be provided at a continually manned control station.

1.2.2.3. It is needed that the electrical equipment shall perform satisfactorily at vibrations with frequencies from 2 to 80 Hz, namely:

a. With amplitude of displacements of ± 1 mm for frequency range of 2 to 13.2 Hz and an acceleration of± 0.7 g for frequency range of 13.2 to 80 Hz. Electrical equipment which are set up on the sources of vibration (diesel engines, compressors, etc.) or in the steering gear compartment shall work properly at vibrations from2 to 100 Hz, namely:

b. With an amplitude of displacements of ± 1,6 mm for frequency range of 2 to 25 Hz and an acceleration of ± 4 g for frequency range of 25 to 100 Hz.

c. Electrical equipment shall also function reliably at shocks having an acceleration of ± 5,0 g and at a frequency of 40 to 80 shocks per minute.

d. The natural vibration frequencies of seatings, attachments and suspensions of machinery, appliances and other electrical devices shall not be in the range from 2to 100 Hz.

1.2.2.4. Permissible variations of supply parameters.

As specified in Table 6.1.2, the electrical equipment shall perform satisfactorily, the voltage and frequency variations from the rated values except if mentioned otherwise in other part of the rule but shall not be of lesser value than table below.

Table 6.1.2

Parameters	**Variations from rated values**		
	For long periods	**For short periods**	
	%	**%**	**time (s)**
Voltage	+6…- 10	± 20	1,5
Frequency	± 5	± 10	5

N o t e.
When the services are fed from an accumulator battery:
long-period voltage variation within + 30 % to – 25 % for the equipment fed from the accumulator battery connected to the charging unit;
Long-period voltage variation within +20 % to – 25 % for the equipment which is not connected to the charging unit.

1.2.3. Materials

1.2.3.1. Structural materials.

a. All the structural parts of electrical equipment shall be of durable materials, to withstand damp & corrosive atmosphere and shall be of low flame-spread characteristic.
b. The screws, nuts, hinges and similar items used for securing the enclosure shall as they are expected to be used in exposed deck and in spaces with increased humidity.
c. All current-carrying parts of electrical equipment shall be of copper / copper alloys or other equivalent materials

   i. Rheostat elements, which shall be made of mechanically strong materials having high resistivity and capable of enduring high temperatures;
   ii. Short-circuit rotor windings of asynchronous and synchronous motors which may be made of aluminium or its alloys resistant to sea conditions;
   iii. Carbon brushes, and other similar parts when the properties specified so require;
   iv. Parts of electrical equipment directly connected to the craft's hull used as a return conductor with a single wire system. The use of other materials for current-carrying part is subject to special consideration by the register in each case.

1.2.3.2. Insulating materials

a. Dielectric strength of insulating materials of live parts shall adequate and is resistant to creepage currents, moisture and oil, as well as mechanical strength, or be appropriately protected. The heating temperature of current-carrying parts and their connections shall not exceed the acceptable heating temperature of the insulating materials at a rated load.
b. In order to cool uninsulated parts of electrical equipment, non-flammable liquids may be used. For this purpose, the use of flammable oils is subject to special discretion by the Register.
c. The insulating materials which are used for winding insulation in machines, apparatus and other equipment for essential services shall fulfill the approved standards. It is recommended that the use of insulating materials shall not be inferior to Class E.
d. Conductors used in electrical devices for internal connections shall have insulation made of materials rated at least as having low flame-spread

characteristics and for equipment with increased heating – of non-combustible materials.

e. In 9, the insulating materials used for the manufacture of cables are stated.

1.2.4. Structural requirements and protection of electrical equipment

1.2.4.1. General

a. Replaceable parts shall be readily removable

b. When in service, it is to be ensured that adequate protection shall be given for gaskets used in components of electrical equipment (such as doors, covers, sight holes, packing glands, etc.).The gaskets shall be secured to the covers or casings.

c. In electrical equipment where condensation is expected to occur, suitable water drainage arrangements shall be arranged. In order to provide for condensate drainage from all the equipment components, channels shall be fixed inside the equipment. Windings and live parts shall be so arranged that they are not open to the effects of the condensate which may store inside the equipment.

d. In order to prevent, as far as practicable, suction of moisture and oil vapours inside the equipment, a ventilation system shall be provided in the electrical equipment with forced ventilation. It is basically designed for installation in lower parts of damp spaces where measuring instruments with oil, steam or water supply are fixed in the control panel or desk. Appropriate measures shall be taken to prevent these agents from making contact with live parts in case of damage to the instruments or pipelines.

1.2.5. Internal wiring

1.2.5.1. For internal wiring of electrical equipment stranded wires shall be used. In cross-sectional area, wires of more than 0.75 mm^2 shall be used for internal wiring of switchgear, control panels, other distributing and switching devices, etc. For systems of control, protection, measurement of parameters, signaling and internal communication, the use of wires having a cross-sectional area not less than 0.5 mm^2 is permitted.

1.2.5.2. It is required that the stranded cores, cables and wires shall have their ends fixed out to suit the type of terminal used , or shall be provided with lugs.

1.2.5.3. The Insulated wires shall be laid up and secured in such a manner that the process used for their securing and arrangement does not lead to reduced insulation resistance as well as these wires shall not exposed to damage due to electro-dynamic loads, vibrations and shocks.

1.2.5.4. It is required to ensure that the arrangements made for the insulated wires under normal operating conditions or within the duration of short-circuit current breaking are not

exceeded the allowed temperatures.

1.2.5.5. Connection of Insulated wires to terminals or busbars shall be done in such manner that the wire insulation shall not be exposed to the overheating temperature under rated operating conditions.

1.2.6. Protection of electrical equipment.

1.2.6.1. Appropriate protective enclosure, or other suitable measures depending on location, shall be taken to protect the electrical equipment from harmful effects of the environment and to protect the personnel from electrical shock hazards.

1.2.6.2. Minimum degree of protection of the electrical equipment which is installed in craft's spaces and zones, shall be determined.

Table 6.1.3

Nos.	Location of electrical equipment	Characteristics of spaces	Degree of protection
1	Dangerous spaces and areas, refer to 2.7	In which explosive mixtures of vapours, gases and dust with air are likely to occur	Ex
2	Ac Accommodation and general use spaces, as well as corridors having no direct exit to exposed deck	Dry	IP20
3	Spaces having direct exit to exposed deck, machinery spaces	With increased humidity	IP23
4	Galleys, showers, lavatories, toilets, accumulator rooms and lockers, ventilating trunks leading to exposed deck, etc.	Water splash	IP44
5	Exposed decks	Water flooding	IP56

Note.
Where the enclosure of equipment does not guarantee the necessary protection, alternative methods of protection or alternative arrangement of equipment shall be applied to ensure the degree of protection stipulated by the Table.

1.2.5. Protective earthing

1.2.5.1. An earth terminal marked with the symbol "⊥" in the metal enclosures is to be fixed in the electrical equipment unless otherwise indicated in the present Part of the Rules.

1.2.5.2. Earthing of Parts

a. A reliable electric bonding with a component fixed with an earth terminal(refer also to 1.2.5.3) shall be there in metal parts of electrical equipment which are not live, but are likely to be touched under service conditions, except those listed in 1.2.5.3, for Protective earthing.
b. Earthing of parts are not required for following:
Electrical equipment supplied with current at safety voltage unless suppression of radio interference is required;
    i. Electrical equipment provided with double or reinforced insulation;
    ii. Metal parts of electrical equipment fastened in an insulating material or passing there through and isolated from live parts in such a manner that under normal operating conditions these parts cannot become live or come in contact with earthed parts;
    iii. Bearing housings especially insulated to guard against circulating currents;
    iv. Lamp caps and fasteners for luminescent lamps, lampshades, reflectors and guards supported on lamp holders or lighting fixtures constructed of, or shrouded in non-conducting material;
    v. Cable clips, cleats, etc.;
    vi. Individual consumer under voltage up to 250 V supplied through an isolation transformer;
    vii. Detachable or openable parts of metal lockers, guards, etc., unless electrical equipment is installed on the detachable (openable) parts or voltage of the electrical equipment installed exceeds 42 V a.c. or 55 V d.c.
c. Earthing shall be provided for the secondary windings of all instrument transformers for current and voltage.
d. For inspection external earthing conductors shall be accessible and secured against getting loose and mechanical damage.
e. Earthing of electrical equipment by connection to pipelines, cylinders for compressed gases and tanks for oil products is not allowed.

f. Earthing shall be effected with the use of a special copper plate of not more than 0.5 m^2 in area and more than 2 mm thick or a plate made of carbon steel of not less than 1.5 m^2 in area and not less than 6 mm thick attached to the underwater part of the shell plating below the light-draught waterline for craft with non-conducting hull, and used for earthing of all items of equipment installed onboard the craft. In place of a special earthing plate, metal stem or other metal structures of the craft (e.g. metal shaft strut)submerged in water under all sailing conditions are permitted to be used.

1.2.5.3. Earthing terminals and conductors

a. Earthing, using copper conductors or any other corrosion free metal of same resistivity & with cross-section more than that given in in Table 6.1.4-2., shall be provided at both ends by means of external earthing conductors, earthing core in the feeding cable or with the use of a direct electrical contact between the equipment enclosure and the metal craft's hull for fixed electrical equipment, metal pipes and outer metal sheaths (braids) of cables used for protection against mechanical damage, metal sheaths of cables and screens of cores used for screening. One earthing connection will be adequate for cables that are laid on wood or synthetic material. In case of alternating current, single-core cables and feeders earthing shall be done only in one point.

b. Earthing of the electrical equipment and cable sheaths, shall meet the parameters given in Table 6.1.4-1The cross-sectional area of the earthing core shall be equivalent to the nominal cross-sectional area of the feeding cable core for cables having a cross-sectional area up to 16 mm^2,at least half the cross-sectional area of the feeding cable core, but not less than 16 mm^2, for cables having a cross-sectional area from 16 mm^2 to 35 mm^2 and also as given in in Table 6.1.4-2.

Table 6.1.4-1

Type of earthing	**Method of earthing**		
	With a separate conductor	**With a cable core**	**With a direct contact**
	Value of resistance, Ohm, not more than		
Protective	0.1	0.4	0.1
Shielding	0.02	-	0.02

Table 6.1.4-2		
Cross-sectional area of a cable core connected to consumer, mm²	**Cross-sectional area of external earthing conductor, mm²**	
	solid	stranded
0.5 to 4	4	2.5
4 to 16	Half the cross-sectional area of cable core connected to consumer, mm²	
16 to 35	16	16
35 to 120	Half the cross-sectional area of cable core connected to consumer, mm²	
Over 120	70	

c. Earthing circuits of the fixed equipment shall be fixed and not-disconnect able nature.

Earthing of shields and metal armour of cables shall be effected Using a copper earth wire of a cross-sectional area not less than 2.5 mm² for cable cores with a cross-sectional area up to 25 mm² and not less than 4 mm² for cable cores with cross sectional area over 25 mm² or by proper connection of the shields or metal armour to the craft's hull by non-corrosive & good conductivity cable gland rings at both cable ends. The earthing conductors shall be fixed firmly to metal craft's hull or to the earthing strap by means of bolts of not less than 6 mm in diameter. It is permitted to use bolts 4 mm and 5 mm in diameter individually for cables and wires having a cross-sectional area up to 2.5 mm² and up to 4mm². For other purposes such bolts shall not be used. Bolts screwed into material without nuts shall be manufactured of brass or other corrosion-resistant material. Contact surfaces on the electrical equipment, as well as on the craft's hull, in places where the earthing conductor is fitted thereto, shall be cleaned to bare metal and properly protected against corrosion.

d. Earthing of movable or portable electrical equipment shall be effected with the use of a special core in the flexible feeding cable through contact connection in a plug-and-socket unit. The cross-sectional area of the earthing core shall comply with the requirements of Table 6.1.4-2.

1.2.5.4. Earthing of Aluminium Superstructures in Steel Ships

Superstructures of aluminium alloys fastened to the ship's steel hull, but insulated therefrom, shall be earthed with a special conductor having a cross section not less than 16 mm^2 which shall be such that it will not start electrolytic corrosion at the point of contact of the superstructure with the hull.

Such earthing connections shall be effected with at least two conductors provided at different locations situated opposite to each other, accessible for inspection and suitably protected against damage.

1.2.6. Lightning protection

1.2.6.1. General Requirements

a. A lightning protection shall be fitted in the protection zone of the ship. It should contain all arrangements that need protection against lightning. The earthing installation which would prevent secondary sparking shall be provided when a ship is exposed to the risk of fire or explosion owing to after effects of lightning's.
b. The lightning installation shall comprise of a spike, lightning conductors and earthing. On metal masts, if provision has been made for a consistent electrical connection of the mast to the metal hull or to the earthing point. The lightning conductors need not be fitted.

1.2.6.2. Spike

a. In metal ships, if provision has been made for their electrical connection to the ship's hull then as spikes such vertical structures as masts, superstructures, etc shall be used. Utilization of additional spikes may be done only in such cases in which the structural elements do not need protection zone.
b. If installation of electrical equipment is done on top of a metal mast, provision of lightning spike having a reliable connection with the mast shall be made.
c. A proper lightning installation shall be fitted on each mast or top mast made of non-conducting material.
d. It is essential that the Spikes shall be made of a rod of at least 12 mm in diameter. The rod shall be made up of copper, copper alloys or steel suitably protected against corrosion; for aluminium masts, the spike may be made of an aluminium rod.
e. Installation of the spike shall be done to the mast in such a way as to project at least 300 mm above the top of the mast or above any equipment fitted on its top.

1.2.6.3. Lightning Conductor

a. In order to get proper protection against corrosion, the lightning conductor shall be made of a rod, flat bar or metal rope having a cross−section not less than 70 mm^2 for copper or its alloys and not less than 100 mm^2 for steel.

b. Lightning conductors shall be run on the outer side of the mast and superstructures and as straight as possible with a minimum number of bends and have the largest possible radii.

c. It is required to check that the lightning conductors shall not pass through explosion hazardous spaces.

1.2.6.4. Earthing

a. In composite ships, the metal stem or other metal structures which are submerged in water under all conditions of sailing may be utilized as earthing.

b. When the ship is in a dry dock or on a slipway, provision shall be made for earthing the lightning conductors or the ship's steel hull to an effective earth on shore.

1.2.6.5. Connections in the Lightning Installation

a. It is required that the connections in the lightning installation shall be properly welded, clamped, riveted or bolted with clamps.

b. The contact area of connections shall be at least 1000 mm^2. The Clamps and bolts shall be made of copper, copper alloys or steel suitably protected against corrosion.

c. For Inspection all connections in the earthing installation shall be accessible and shall be protected against mechanical damage.

1.2.7. Safe-type electrical equipment

1.2.7.1. The present Chapter deals with the requirements to the equipment which is fitted in enclosed and closed spaces and zones of the craft and in which explosive mixtures of vapours, gases or dust are hazardous concentrations and can be dangerous if comes into contact with air. The spaces and zones fall under this category are paint lockers, lantern rooms(for oil lanterns), accumulator battery rooms and spaces which are comprise of tanks, machinery and pipes for flammable liquids having a flash point of 55°C and below.

1.2.7.2. Only safe-type electrical equipment may be installed in dangerous spaces and zones for the protection of the category and group which is having most dangerous gas mixture.

Such electrical equipment shall be of the following safe type:

a. Intrinsically safe *Exi*,

b. Pressurized *Exp*,

c. Flame proof Exd, increased safety Exe.

1.2.7.3. The electrical equipment with the degree of protection not below IP65 shall be fitted in spaces where explosion can occur if the dust or fibre may come into contact with air. Where the occurrence of explosive mixture of dust or fibre with

air is not frequent resulting from the damage or leakage from processing equipment —electrical equipment with the degree of protection, IP55 may be allowed. Installation of the lighting fixtures of safe type shall be done in such manner that a free space around them is not less than 100 mm, apart from the place of fastening.

1.2.7.4. If installation of any equipment is done in dangerous spaces and zones, except for fire detectors, switches shall be provided fitted in a safe position outside the dangerous spaces and zones to disconnect live conductors.

1.2.7.5. It is not permissible that any electrical equipment is fastened directly to the walls of tanks intended for flammable liquids. However, whatever the case may be, fastening of electrical equipment shall be done at a distance not less than 75 mm from the tank walls.

1.2.7.6. In dangerous spaces and zones, it is only permissible to lay those cables which serve the electrical equipment installed in such spaces and zones. The through runs of cables maybe allowed in the above spaces and areas on condition that the requirements of 1.2.7.8 to 1.2.7.10 are met.

1.2.7.7. Cables installed in dangerous spaces and zones shall have:

a. Metal armour or braid covered with a non-metal sheath, or
b. Lead sheath with additional mechanical protection,
c. Or, copper or stainless steel sheath (only for cable with mineral insulation).

1.2.7.8. Protection shall be done for Cables passing through dangerous spaces and zones against mechanical damage.

1.2.7.9. Earthing shall be done at both ends at least for all shields and metal braids of cables of power circuits for electric motors and lighting systems, which pass through dangerous spaces and zones or supply the electrical equipment installed in these spaces . Cables of essentially safe circuits shall not be used for more than one safe device and shall be laid separately from other cables.

1.2.7.10. It is required to check that the cables of portable electrical equipment, except for cables of intrinsically safe circuits, are not passing through dangerous spaces and zones.

1.2.8. Electromagnetic compatibility

1.2.8.1. Ship’s electrical and electronic equipment shall be resistant to electromagnetic interferences.

1.2.8.2. It is required that the Electromagnetic interference emission generated by the ship’s electrical and electronic equipment shall fulfill the requirements specified in *relevant National Standards.*

1.2.8.3. Earthing shall be done at screens of power cables, metal coating and armouring of cables and shall be done at as many points as practicable, at least at the points of

their connections and at each end, joining them to the metal enclosures of electrical equipment and to the ship's hull.

1.2.8.4. Screening shall be done for all signal, control and information cables. Appropriate earthing shall be done at Metallic screens of these cables to the number of screens. Earthing shall be done on both sides and shall be connected to equipment earthing in the case of double−screened cables and high frequency field interference, internal and external screens. Earthing of internal cable screens may be done on one side if low frequency interference occurs. The above−mentioned principles do not apply to screened concentric cables.

1.2.8.5. Screening of all cables of radio communication, radio navigation equipment and internal service communication systems shall be done and maintenance of the cable screening continuity shall be sustained It is also required that the screening . All cables laid in rooms containing radio communication or radio navigation equipment shall be screened, the cable screening continuity being maintained.

1.2.8.6. In all cases, all cable sheaths, i.e. in cable junction and connecting boxes shall be provided with the electrical continuity, as well as at the point of cable penetrations of bulkheads.

1.2.8.7. Conductors with earth cable screens may be connected to the earthing bus of switchboard, if available or directly to the ship's metal hull.

1.2.8.8. Screens of signal conductors shall be covered with an insulated outer sheath, In order to avoid contact with the ship's hull.

1.2.8.9. Earthing of the screens and enclosures of electrical equipment placed in rooms containing radio communication and radio navigation equipment shall be done as below:

a. By a copper earthing wire having a cross−section not less than 1.5 mm^2. For cables with a cross−section up to 25 mm^2 and not less than 4 mm^2. For cables with a cross−section over 25 mm^2;

b. By a suitable fastening of the metal sheath or armour of cables to the metal hull of the ship;

c. By means of rings in the cable glands, provided they are corrosion−resistant, well conducting and resilient.

The earthing shall be effected at both ends of a cable, except cables in final sub−circuits which are permitted to be earthed on the supply end only. Where the methods specified above would cause failures in the equipment operation, the screens, metal sheaths and armour of cables may be earthed by other approved means, the screens of cables and flexible cords shall be also earthed.

It is not required to do the earthing for the screens and enclosures of electrical equipment which do not generate radio interference on condition that the electrical equipment itself does not require protective earthing.

It is advisable to use screened cables with pair or multipair twisted wires to increase resistance to electromagnetic interference.

Installation of navigational equipment, cables and other equipment on navigation bridge shall be so arranged in such manner that the magnetic field generated by this equipment will not cause the deviation of the ships magnetic compass greater than 0 ± 0.5º.

1.3. Sources of electrical power

1.3.1. Main source of electrical power

1.3.1.1. As specified in 1.3.1.5, craft in which electrical equipment is installed shall be provided with the main source of electrical power with a capacity adequate to feed all the electrical equipment on board the craft under all conditions.

1.3.1.2. As a main source of electrical power at least one of the following facilities may be used :

a. Generator driven by a propulsion plant engine and generator driven by an individual internal combustion engine;
b. Generator driven by an individual internal combustion engine and one or several accumulator battery(ies)which is(are) floating on the generator;
c. Generator driven by a propulsion plant engine and one or several accumulator battery(ies) which is(are) floating on the generator;
d. Generator driven by the propulsion plant and one or several accumulator battery(ies) which is(are) floating on the generator;
e. One or several accumulator battery (ies).

As specified in 1.3.1.2.(a) to 1.3.1.2.(d) the source of electrical power for craft of navigation and R, RC, R100, R200,R300 may be used as the main sources. In this case, the capacity of a generator shall be adequate to supply necessary services under running conditions and at the same time the generator shall be capable of charging the accumulator batteries.

Accumulator battery including such a battery which is floating on a generator and the main source of electrical power shall have sufficient capacity without additional recharging from the craft's charging facilities and with regard to 1.3.2.14.to supply the electrical services required within the following conditions where:

24 hrs– for craft of design categories R, R100, R200,R300

16 hrs– for craft of design categories C or C1;

8 hrs– for craft of design categories C2 or C3.

1.3.1.3. The accumulator battery capacity shall be adequate to comply with the requirements of 1.3.1.4 and 1.3.2.8 where an accumulator battery is simultaneously used for starting the main internal combustion engines.

1.3.1.4. The number and capacity of the sources of electrical power shall be determined with regard to the following operating conditions of the craft:

a. Running conditions;

b. Maneuvering ;

In case of fire, hole in the craft's hull or other conditions affecting the safety of navigation, with the main source of electrical power in operation;

c. Other operating conditions according to the craft's purpose.

1.3.1.5. Permissible Voltages

a. The permissible rated voltages across the terminals of the sources of electric power shall not exceed:

i. 400 V at the frequency of 50 Hz three−phase alternating current and 460 V at the frequency of 60 Hz three−phase alternating current;

ii. 230 V at the frequency of 50 Hz single−phase alternating current and 250 V at the frequency of 60 Hz single−phase alternating current;

iii. 230 V of direct current.

iv. For installations with rated power of electrical sources not exceeding 3 kW, the voltages of 12 V and 24 V are recommended.

v. The permissible rated voltages across the terminals of consuming appliances shall not exceed the values specified in Table 6.1.5.

Table 6.1.5.

Item	Type of consumers	Permissible Voltages (V)	
		Direct Current	Alternating current
1	Power consumers, control circuits and heating appliances permanently installed in spaces other than those specified in item 2	220	380[4]
2	Heating appliances in cabins and spaces where passengers may	220	220[1,5]

	be present		
3	Lighting, signalling and internal communication	220	220[5]
4	Socket outlets	220[2]	220[2,3,5]

380 V alternating current is permitted, only if protective measures as stated below is done:

Access to live parts (stationary space heating rated at 380V and as given Table 6.1.5) and shall be allowed only with special tools.

1. At socket outlets for a voltage exceeding the safe voltage, installed in spaces with increased humidity or in particularly humid spaces, inscriptions shall be provided stating that only the appliances with double or reinforced insulation or appliances separated from the voltage exceeding the safe voltage may be used.
2. Socket outlets at voltages up to 380 V may be used for supplying portable appliances, fixed in position during operation.
3. 440 V, 60 Hz alternating current may be used for power consumers.
4. 250 V, 60 Hz alternating current may be used.

1.3.2. Accumulator batteries

1.3.2.1. Accumulator batteries shall be installed above the bilge level in dry locations, readily accessible, ventilated and not exposed to environmental effects, such as high or low temperature, water splashing and mechanical damage.

1.3.2.2. Accumulator batteries shall not be installed in close vicinity to fuel tank or fuel filter. Any metal component of the fuel oil system within300 mm above the battery top, as installed, shall be electrically insulated.

1.3.2.3. Special room or in boxes are to be arranged for accumulator batteries having a capacity over 0,2 kW (66 AH at 24 V and 135 AH at 12 V). This requirement does not apply to unattended accumulator batteries.

1.3.2.4. Acid and alkaline batteries shall not be located in the same room or box. The containers and accessories intended for batteries with different electrolytes shall be placed separately.

1.3.2.5. The battery rooms and boxes shall be adequately ventilated to prevent generation and accumulation of explosive as-air mixtures.

1.3.2.6. The accumulator batteries shall be so arranged that at craft inclinations up to 45 deg. electrolyte from vented cells does not leak.

1.3.2.7. The starting accumulator battery intended for starting engines having power output not more than 75 kW may be used for supplying the craft's lighting system.

1.3.2.8. Capacity of the starting battery shall ensure six starts of the engine, considering that the duration of each start is at least 5 s, and shall meet the recommendations of the engine manufacturer. If no engine manufacturer's requirements are available, the capacity of the starting battery Q, in AH, can be determined by the formula:

$Q = k P_{st}$, (3.2.8)

where: k = battery capacity factor;

k = 70 for voltage of 12 V;

k = 35 for voltage of 24 V;

P_{st}= rated capacity of starter, kW.

1.3.2.9. The procedure of charging of an accumulator battery from the main source shall ensure charging of the battery during not more than 8 hrs.

1.3.2.10. When selecting capacity of acid batteries intended for a service other than starting service, their discharging of not more than 50 per cent of the rated capacity shall be specified. For alkaline batteries, a greater discharging value may be specified in accordance with the battery manufacturer's recommendations.

1.3.2.11. The starter of the main engine shall be supplied from the starting battery and in an emergency – from another battery having adequate capacity.

1.3.2.12. The starting battery shall be located as close to the engine as practicable.

1.3.2.13. The electrical circuits of the starting battery shall not incorporate protection against over-current.

1.3.2.14. The accumulator batteries shall not be used for supply of services with a voltage lower than the total voltage of all the battery cells.

1.3.2.15. It is recommended to use batteries which do not require attendance.

1.3.3. Emergency electrical installations

1.3.3.1. Autonomous emergency source of power shall be provided.in each class of crafts and shall be located above the damage waterline. For craft of design categories **C** and **C1**, it is permitted to install the autonomous emergency source of electrical power in machinery space.

One or several accumulator battery (ies) which is (are)floating on the wind generator or solar battery may be used as the independent emergency source of electrical power.

1.3.3.2. Where an accumulator battery is used as the emergency source of electrical power, its capacity shall be sufficient to supply the following services during the period of time not less than 25 per cent of that specified in 1.3.1.2:

a. emergency lighting of:

Stowage places for life-saving appliances, emergency materials, firefighting inventory;

Stairways, corridors, exits from machinery spaces;

Passenger spaces;

Machinery space;

Wheelhouse;

Places for stowing and launching of survival craft;

Muster and embarkation stations on deck and over the sides and locations places for crew crowding in an emergency;

All control stations (desks) as well as spaces for the main and emergency switchboards;

Spaces for the emergency source of electrical power;

Steering gear compartment;

Near fi re pump, emergency bilge pump and at the starting positions of their motors;

b. Navigation lights;
c. Radio communication means if the craft's own emergency battery is not available;
d. Sound signal means;
e. Internal communication, general alarm and fire detection and alarm facilities.

1.3.3.3. In craft where the power source specified in 1.3.1.2.(a) to 1.3.1.2.(d), on which the floating accumulator battery is the main source of electrical power, the specified battery may be regarded as the emergency source of electrical power.

1.3.3.4. In craft where an accumulator battery is used as the emergency source of electrical power, installation of an emergency source of electrical power is not required, provided that the capacity of the battery is sufficient to comply with the requirements of 1.3.3.2.

1.3.3.5. Installation shall be done in separate spaces for the battery and the emergency switchboard where an accumulator battery is the emergency source of electrical power.

1.3.3.6. In craft where the source specified in 1.3.1.2.(a) is the main source of electrical power, the individually driven generator installed on board in accordance with 1.3.3.1 may be regarded as the emergency source of electrical power. In this case, provision shall be made for testing of the complete installation, mentioned in 1.3.1.2.(a), together with the automatic starting arrangements of the individual generate prime mover.

1.3.3.7. An indicator shall be provided in the central control station to show when any accumulator battery, which serves as an emergency source of electrical power, is being discharged.

1.3.3.8. The emergency sources of electrical power shall be provided only with short-circuit protection. Where a generator driven by an individual internal combustion engine is the emergency source of electrical power, visual and audible alarms shall be fitted in the central control station or watch-keeping location to warn of the generator over-current.

1.3.3.9. The emergency switchboard shall be located as close as practicable to the emergency source of electrical power.

1.3.3.10. Where the generator driven by an individual internal combustion engine is the emergency source of electrical power, the emergency switchboard shall be installed in the same place as the generator except where such an arrangement would adversely affect the switchboard operation. All starting arrangements and charging facilities and starter accumulator batteries of the emergency unit shall also be located in this place.

1.3.3.11. Where the emergency generator shall be driven by an internal combustion engine it shall:

a. Automatically started upon failure of electrical supply from the main source of electrical power and automatically connected to the emergency switchboard. The total time of starting and load take-over by the generator shall not exceed 45 s;

b. In case the automatic start of the emergency unit stipulated by 1.3.3.11.(a) will not take place within 45 s, a transitional source of emergency electrical power shall be provided, which shall start immediately upon de-energization.

1.3.3.12. Where an accumulator battery is used as the emergency source of electrical power, it shall:

a. Operate without recharging while maintaining the voltage variations across the terminals within 12 percent of the rated voltage throughout the discharge period;

b. Be automatically connected to the emergency switchboard busbars in the event of failure of the main source of electrical power.

1.3.3.13. The capacity of the battery serving as the transitional source of emergency electrical power shall be sufficient to supply for 30 min, the following services:

a. Lighting and essential navigation lights;

b. All internal communication and announcing means required in an emergency;

c. General alarm and fire detection and alarm systems;

d. Daylight signalling lamps, sound signal means(whistles, gongs, etc.).

Services listed under 1.3.3.13.(b),(c), and (d),may not be supplied from the transitional source if they have their own accumulator batteries by which they are supplied during the required period of time.

1.3.3.14. The emergency switchboard under normal service conditions shall be supplied from the main switchboard by an interconnector feeder which shall be adequately protected at the main switchboard against over-current and short circuit also automatic opening of the breaker upon failure of the main source of electrical power. Where the main switchboard is supplied from the emergency switchboard the automatic breaker in the emergency switchboard shall be provided, at least, with short-circuit protection.

1.3.3.15. Cables feeding emergency services shall be so laid that flooding of emergency consuming equipment situated below the bulkhead deck does not discontinue the supply of other consuming equipment located above that deck.

1.3.3.16. Switchgear of emergency services shall be located above the bulkhead deck.

1.3.4. Power supply from an external source of electrical power

Where provision is made for the craft's mains to be supplied from an external source of electrical power, an external supply switchboard shall be installed onboard with adequate devices to ensure to indicate that voltage from the external source exists across the terminals; monitor polarity or phase sequence; availability of a terminal for connecting a neutral wire from the external source and specially marked terminal for connecting a protective earthing conductor from shore ; nameplate indicating distribution system, voltage, type of current and frequency;

1.3.4.1. The external supply switchboard shall be connected to the main switchboard by means of a permanently laid cable.

1.3.4.2. On craft with electrical installation of low power, it is allowed to install socket outlets used for power supply from the external source of electrical power. The socket outlet with a rated current over 16 A shall have a switch interlocked so that the plug cannot be inserted or withdrawn while the switch is in "ON" position. The socket outlet shall be protected against mechanical damage and flooding by water. The socket outlet shall be so designed as to preclude touching current-carrying parts under all

conditions which are likely to be met in service and its spontaneous disconnection.

1.3.4.3. The Owner's Manual shall contain information on precautions to be taken when connecting/disconnecting power supply from shore. If a craft is powered from a shore supply, the Manual shall include information regarding the hazard caused when the craft sails in the vicinity of the shore supply cables and the necessity of using in this case the relevant notice "SAFETY PRECAUTION".

1.4. Distribution of electrical power

1.4.1. General

1.4.1.1. A switching and protective device shall be provided with each outgoing electrical circuit in the switchboard.

1.4.1.2. Electrical lighting of spaces shall not be put under load in excess of 10 A in the final circuits which may supply cabin fans and other minor services also.

1.4.2. Electrical power distribution

1.4.2.1. The following d.c. distribution systems shall be used on board craft:

a. Two-wire insulated system;
b. Two-wire system with negative earthed pole;
c. Three-wire system with a common negative pole.

1.4.2.2. A single-wire d.c. and a.c. distribution system with the use of the craft's hull as a return conductor is not permitted, except for limited and locally-earthed systems (e.g. starter systems).

1.4.2.3. The switchgear (main switchboard, emergency switchboard) may be fixed in a desk located in the wheel house.

1.4.2.4. From the main switchboard busbars the following services (if applicable) shall be supplied**.**

a. Steering gear electric drives (refer also to1.5.2.2);
b. Anchor gear electric drives;
c. Fire pump electric drives;
d. Bilge pump electric drives;
e. Section switchboards of lighting;
f. Radio station switchboard;
g. Navigational equipment switchboard;
h. Navigation lights switchboard;
i. Switchboard of integrated control desk;
j. Switchboard of automatic fire detection and alarm station;

k. Electric drives of auxiliaries essential for the operation of main machinery;

l. Switchboards of electric drives for cargo, mooring, lifeboat and other gear, ventilation and heating appliances;

m. Charging facilities of starter accumulator batteries and batteries supplying essential services;

n. Other services not listed above, as required by the register.

It is permitted to supply services indicated in 1.4.2.4 (d),(f),(g),(h),(j),(k),(m) above from the switchboard specified in 1.4.2.4 (i) by separate feeders provided with adequate switching and protective devices.

These circuits shall not supply simultaneously lighting and heating appliances

1.4.2.5. Final sub-circuits having a current rating in excess of 16 a shall supply not more than one service.

1.4.2.6. Supply circuits for smaller groups of services shall be specified for a rated current not in exceed of 16 A. short-circuit load for copper busbars shall be determined according to national standards.

1.4.3. Switchboards

1.4.3.1. Switchboard design.

a. Construction by metal or some other durable non-combustible material shall be used for frames, front panels and enclosures of main, emergency, section and group switchboards.& shall be of sufficiently rigid structure capable of withstanding the mechanical stresses liable to occur in service or as a result of short circuits.

b. Drip proof protection of Switchboards is the minimum requirement. This protection is not required if the switchboards shall be located in places where the conditions are such that no vertically falling drops can get onto the switchboard (refer also to 1.4.3.6.(b)).

c. Switchboards intended to be installed in places accessible to unauthorized persons shall be fixed with doors to be opened by means of a special key, the same for all the switchboards on board.

d. The design of the switchboard doors shall be such that with the doors opened an access is ensured to all parts which require maintenance, and the live parts located on the doors shall be protected against inadvertent touching. The opening panels and doors which are used for mounting electrical control gear and measuring instruments shall be securely earthed with at least one flexible bonding.

e. The generator panels of main switchboard shall be illuminated with luminaires supplied on the generator side before the main circuit-breaker or not less than from two different systems of busbars, where such systems are available.

f. The design of switchboards shall be such that the access is provided to all parts, which require maintenance. Arrangements shall be provided for doors of switchboards and distribution cabinets to fix them in open position. Instruments and devices that need observation and maintenance shall be mounted at a height not more than 1.8 m.

g. Each switchgear designed for a voltage of 50 V and over, fixed with switching and protective equipment and without a voltmeter, shall be furnished with a pilot lamp indicating the existence of voltage on busbars.

1.4.3.2. Busbars and uninsulated conductors.

a. The limiting heating temperature for switchboard electrolytic copper busbars and uninsulated conductors at the rated load and short-circuit current and also the adequacy of dynamic and thermal stability of the same when carrying short-circuit currents occurring at relevant points in the circuit shall be decided as per national standards.

b. Equalizer busbars shall be designed for at least 50 per cent of the rated current of the largest generator connected to the main switchboard.

c. Insulators and other parts designed to support busbars and uninsulated conductors shall be capable of bearing the loads due to short circuits.

d. Busbars shall be connected so as to prevent corrosion in way of connections.

1.4.3.3. Selection of electrical switching devices.

a. Electrical switching devices shall at least comply with the national standards and shall be so selected that:

i. Under normal service conditions their rated voltages, currents and temperature rise limits are not exceeded;

ii. They are capable of withstanding, without damage or exceeding temperature limits, such over-currents as specified for transient conditions;

iii. Their characteristics under short-circuit conditions are consistent with the actual short-circuit power factor, as well as with the behaviour of the sub-transient and transient short-circuit current.

b. In electric circuits having a load current rating in excess of 320 A, circuit breakers shall be fixed for overcurrent protection. The use of circuit breakers is recommended at the current exceeding 200 A.

c. In d.c. compound generator circuits where the generators are intended for parallel operation, circuit breakers shall have a pole in the equalizing wire mated mechanically with the other poles of the circuit breaker so that it would close before the other poles are connected to the busbars and open after their disconnection.

1.4.3.4. Arrangement of electrical switching devices and measuring instruments.

a. Devices, measuring and indicating instruments used in connection with generators and other major essential installations shall be fixed on the switchboards associated with the appropriate generators and installations. This requirement may be ignored in case of generators where there is a central control console with switchgear and measuring instruments for several generators.

b. One ammeter and one voltmeter shall be provided or each d.c. generator on the main and emergency switchboards.

c. The following measuring instruments shall be provided for each a.c. generator on the main switch board and for emergency generator on the emergency switchboard:

i. An ammeter with a selector switch which enables it to measure the current in each phase;

ii. A voltmeter with a selector switch to permit measurement of phase and line voltages;

iii. A frequency meter (use of one double frequency meter is permissible for generators operated in parallel, with change-over to each generator);

iv. A wattmeter (for output over 50 kVA);

v. Other instruments as required.

d. In craft having a low-power electrical installation, in which the generators are not expected to operate in parallel, one set of instruments as stipulated in 1.4.3.4.(b) and 1.4.3.4.(c) may be installed at the main and emergency switchboards, which would provide a possibility of making measurements at each generator installed.

e. Ammeters shall be installed in the circuits of essential services rated at 20 A and over. These ammeters be installed on the main switchboard or at control stations. It is allowed to install ammeters with selector switches, but not more than for six services.

f. In the main switchboard, the feeder supplied from the external power source shall be provided with:

i. Switchgear and protective devices;
ii. A voltmeter or a pilot lamp;
iii. Phase break protection device;
iv. Voltage drop protection device.

g. A change-over arrangement or a separate device for each circuit of isolated system for measuring and indicating the insulation resistance shall be installed on the main and emergency switchboards.

1.4.3.5. Light signals

Colours specified in Table 6.1.6 shall be used for light signals.

1.4.3.6. Arrangement of switchgear

a. Switchgear shall be installed in locations where the possible concentration of gases, water vapours, dust and acid evaporations is eliminated.

Table 6.1.6

Colour	**Meaning**	**Type of signal**	**Condition**
Red	Danger	Flashing	Alarm in dangerous conditions when a prompt response is required
		Steady	General alarm in dangerous conditions as well as in dangerous conditions detected but not yet rectified.
Yellow	Attention	Flashing	Abnormal conditions when a prompt response is not required
		Steady	Intermediate condition between abnormality and safety. Abnormal condition already detected but not yet rectified.
Green	Safety	Flashing	Standby machinery is put into operation

		Steady	Normal conditions of running and operation.
Blue	Information	Steady	Machinery and gear are ready for starting. Energized mains. Everything is O.K.
White	General information.	Steady	Notations relating to automatic operation. Other auxiliary signals

b. Arrangement of piping and tanks near the switchboards shall conform to the requirements of Part of INTLREG rules.

c. The navigation lights switchboard shall be located in the wheelhouse where it is readily accessible and visible to the personnel on watch.

d. The main switchboard and generating sets are recommended to be located in the same place. Subject to agreement with the Register, the main and emergency switchboards may be located in the wheelhouse.

e. Craft equipped with both direct current (d.c.) and alternating current (a.c.) electrical systems shall have their distribution from either separate switchboards or a common one with a partition provided to separate clearly the d.c. and a.c. sections from each other. Wiring diagrams of the switch board shall be included, with the craft.

1.4.3.7. Access to switchboards.

a. A passageway of at least 600 mm wide shall be provided in front of the switchboard.

b. A passageway of at least 600 mm wide shall be provided on the rear, lengthwise of the free standing switch boards. On agreement with the Register, the width of this passageway may be reduced to 500 mm in some places.

c. The space behind the free standing switchboards with live open parts shall be enclosed and fixed with doors.

1.5. Electric drives of the craft's machinery and equipment

1.5.1. General

1.5.1.1. Requirements of Part 6 as relevant shall meet the Control stations of drives

1.5.1.2. In order to indicate actuation of the electric drive, electrically-driven machinery shall be provided with visual alarm.

1.5.1.3. Design of the automatically, remotely and locally controlled equipment shall be done

in such manner that in the event of changeover to the local control, the automatic and remote control shall be switched off.

1.5.1.4. The electric motors or facilities which require additional ventilation in normal operation can be started only with ventilation in operation.

1.5.2. Switchgear and control gear

1.5.2.1. During the transition period of activation of protection device after starting of electric drive, the short circuit current as may flow at the point of installation shall be endured if the electric drive in operation do not have short circuit protection device.

1.5.2.2. Provision shall be available in the control to start an electric motor from a zero position only.

Isolating switch for power supply shall be available for each electric motor rated beyond 0.5 kW and over and its control gear Where the control gear is mounted on the main or any other switchboard in the same space and its visibility from the place of electric motor installation is assured, then, it is allowed to use the switch mounted on the switchboard. If the above requirements are not met, the following shall be provided:

a. Device interlocking the switch on the switchboard in the off-position;

b. Additional switch near the electric motor;

c. Such installation of fuses in each pole or phase that they are readily removed and replaced by operating personnel

1.5.3. Electric drives and control of steering gear

1.5.3.1. Additionally to the requirements of Part 5A of INTLREG rules, it is mandatory that steering gear shall meet the requirements of the present Part of the Rules.

1.5.3.2. Each electric or electro-hydraulic steering gear shall be supplied by a separate feeder laid directly from the main switchboard, each feeder being laid in a separate run. Feeders shall be supplied from different sections where sectionalized collecting busbars are used in the main switchboard. One of the feeders may be supplied through the emergency switchboard in case an auxiliary steering gear is provided.

1.5.3.3. Other than electric motors of rudders with direct electric drive, starting and stopping of the steering gear electric motors, shall be effected from the steering room and from the wheelhouse.

1.5.3.4. Automatic restarting of electric motors is needed to be ensured by the starting devices as soon as the voltage is restored after a discontinuity in power supply. A

change-over switch shall be provided to ensure functioning of only one control station, at the operator's choice, where several control stations for electric drives of steering gear are available.

1.5.4. Electric drives of anchor and mooring machinery

1.5.4.1. The electric drives of windlasses, anchor and mooring capstans and mooring winches shall meet the requirements of the present Part of the Rules additionally to the requirements of Part-5A of INTLREG Rules.

1.5.4.2. The electric drives of the anchor and mooring machinery shall ensure, after 30-minute operation at rated load, possible stalling of the electric motor at the rated voltage for at least 30 s for the anchor machinery and 15 s for the mooring machinery when a.c. squirrel-cage electric motors are used. Following stalling, the temperature rise shall not be over 130 per cent of the permissible value for the insulation used.

1.5.4.3. In anchor and mooring capstans and mooring winches, at the speed steps intended only for mooring operations, provision shall be made for over-current protection of the electric motor.

1.5.4.4. The supply of electric drives of anchor capstans or windlasses shall be effected from the main switchboard busbars.

1.5.5. Electric drives of pumps

1.5.5.1. The electric motors of fuel oil and lubricating oil transfer pumps and separators as well as of organic coolant circulation pumps shall be provided with remote disconnecting switches located outside the space wherein these pumps are installed and also outside the machinery enclosures, but in close vicinity of the exits from these spaces and located in noticeable positions covered with glass and provided with explanatory inscriptions.

The electric motors of emergency fire pumps shall be provided with remote starting devices and the same shall be located above the bulkhead deck. However, provision shall be there for enabling local control also.

1.5.5.2. The electric motors of oily and sewage water transfer and discharge pumps shall be installed with remote cut-off arrangements placed in the vicinity of discharge manifolds, in case no telephone communication is available between the discharge observation position and discharge control position.

1.5.5.3. Local starting of fire and bilge pumps shall be possible even in the event of failure of their remote control circuits.

1.5.6. Electric drives of fans

1.5.6.1. In machinery space the electric motors of ventilation fans shall be provided with at least two disconnecting switches, one of which shall be positioned outside the machinery spaces and their enclosures, but near the exits from these spaces. These disconnecting switches may be positioned together with similar switches as referred to in 1.5.5.1.

1.5.6.2. Ventilation fan motors in galley shall have the cut-off devices placed in positions readily accessible from the main deck, but outside the machinery casings. Ventilation exhaust motors from galley ranges shall be provided with a disconnecting switch located inside the galley, regardless of the number of disconnecting switches.

1.5.6.3. The electric motors for the general craft's ventilation shall be installed with a switch for remote disconnection of the motors being positioned in the wheelhouse.

1.5.6.4. The electric motors in spaces protected by fire smothering system shall be installed with a disconnecting switch operating mechanically when fire extinguishing medium discharged into the space concerned.

1.6. Lighting

1.6.1. General

1.6.1.1. In all craft's spaces, places and zones where illumination is essential for the safety of navigation, control of machinery and gear, habitability and evacuation of passengers and crew, stationary main lighting fixtures shall be provided, which are supplied from the main source of electrical power.

The list of spaces, places and zones where the emergency lighting fixtures shall be fixed in addition to the main ones is given in 1.3.3.2.(a).

1.6.1.2. Lighting fixtures shall be installed in such a manner as to prevent heating of cables and adjacent materials

1.6.1.3. External-illuminating lighting fixtures shall be so installed as to prevent interference for navigation and for identification of the navigation lights.

1.6.1.4. Heat resistant wires shall be provided for internal wiring in lighting fixtures. A bolt for earthing shall be provided on the lighting fixture body. A reliable electric contact shall be ensured between all the metal parts of the lighting fixtures.

1.6.2. Power supply of main lighting circuits

1.6.2.1. The main lighting circuits shall be supplied by feeders from the main switchboard or by separate feeders from separate main lighting switchboards. The main lighting switchboards may supply the electric drives of nonessential services rated up to 0.25 kW and individual cabin heaters rated up to 10A.

1.6.2.2. Protective devices of final lighting circuits shall be set to actuate at a current rating nor exceeding 16 A. The total load current of the consumers connected shall not exceed 80 per cent of the rated current of the protective device.

1.6.2.3. The main lighting of corridors, lounges and passageways leading to the survival craft and to the evacuation areas on deck (if more than one luminaire is available), machinery spaces shall be supplied by at least two independent feeders, with the luminaires arranged in such a manner that even in case of failure of either feeder, as uniform lighting as possible is ensured. These feeders shall be supplied from different group switchboards, which in case of use of sectionalized lighting busbars in the main switchboard shall be supplied from different busbar sections.

1.6.2.4. Local lighting fixtures in accommodation spaces as well as socket outlets shall be supplied from the lighting switchboard by a separate feeder, other than that intended for supplying the general lighting fixtures. This requirement does not apply to individual plug transformers.

1.6.2.5. When determining the cross-sectional area of a cable, each socket outlet at the voltage of 110 V and over shall be taken as being rated at 100 W. Inn case of portable lighting, a socket outlet at the voltage of 12 V shall be taken as being rated at 15 W and at 24 V – as being rated at 25 W.

1.6.3. Emergency lighting

1.6.3.1. The illumination obtained from the emergency lighting fixtures in separate spaces, locations and zones listed in 1.3.3.2.(a) shall at least be equal to 10 per cent of the general illumination obtained from the main lighting fixtures (refer to 1.6.6). It is permitted that the illumination from the emergency lighting fixtures shall at least be equal to 5 per cent of the main illumination, if socket outlets fed from the emergency lighting circuit are provided. The illumination shall be sufficient to easily find the way to the escape means (or shall be equal to 0,5 lx).

1.6.3.2. To obtain the illumination required in 1.6.3.1, the emergency lighting fixtures with incandescent lamps may be combined with luminescent lamps.

1.6.3.3. The main lighting fixtures are permitted for use as emergency lighting fixtures if they can also be fed from the emergency sources of electrical power.

1.6.3.4. The emergency and main lighting circuits shall be, whenever possible, independent of one another. In case, when one of two circuits fails, the other shall function so as to preclude complete loss of illumination of the spaces and passageways and stairways.

1.6.3.5. Stationary lighting fixtures with built-in accumulators and automatic recharging from the main lighting circuit with a relay switch may be used for emergency lighting.

1.6.3.6. Each emergency lighting fixture and combined lamp holder (refer to 1.6.3.3) shall be marked red.

1.6.4. Switches in lighting circuits

1.6.4.1. Two-pole switches shall be used in all lighting circuits.

In dry accommodation and service spaces, single-pole switches may be used in circuits to switch off individual luminaires or groups of luminaires rated at not more than 6 A and also luminaires designed for safety voltage.

1.6.4.2. For stationary external-illumination lighting fixtures, provision shall be made for centralized switching-off of all luminaires from the wheelhouse or from other permanently attended station on the upper deck.

1.6.4.3. The switches of lighting circuits of fire extinction stations and service spaces having high fi re risk, bathrooms, showers and other extra humid spaces shall be located outside these spaces.

1.6.4.4. Local switches of lighting fixtures shall not be used in the emergency lighting circuits. The use of local switches is permitted in circuits of the emergency lighting fixtures, which under normal conditions serve as main luminaires.

A switch shall be provided for emergency lighting in the wheelhouse, Emergency lighting fixtures of embarkation stations, which under normal conditions, serve as main lighting fixtures shall switch on automatically if the craft is de-energized.

1.6.5. Socket outlets

1.6.5.1. Installation of Socket outlets for portable lighting fixtures shall be done at least:

a. On deck near the windlass;
b. In machinery spaces;
c. In the steering gear compartment;
d. On the navigation bridge;
e. In the radio room

1.6.5.2. Installations of socket outlets in circuits with different voltages shall be designed in such manner that it can prevent insertion of a plug intended for one voltage into a socket intended for another voltage.

1.6.5.3. Installation of socket outlets of portable lighting and other electric appliances on weather decks shall be adjusted for insertion of the plug from the underside.

1.6.6. Illumination

In accordance with the relevant illumination standard, the illumination intensity of particular spaces and zones shall be fulfilled.

1.6.7. Navigation lights (replace by 6.3 of Polish)

1.6.7.1. In tugs, fishing and hydrographic vessels and other similar purpose ships the navigation lights switchboard shall supply the following by separate feeders:

a. The masthead lights;
b. Side lights;
c. The stern lights;

Permanently mounted lights shall also be supplied by the navigation lights switchboard in accordance with the specifications made in the *COLREG Convention* (the relevant requirements are also given in Table 2.4.1, Part III – Signal Means of the Rules for Statutory Survey of Sea-going Ships).

1.6.7.2. The navigation lights switchboard shall be supplied the following by two feeders:

a. One feeder from the main switchboard,
b. The second feeder from the section switchboard or separate circuits of the ship's lighting system.

The installation of navigation lights switchboard in the ship control and monitoring console may be supplied directly from the console.

The navigation lights may be supplied directly from the switchboard in ships where the main source of electric power is an accumulator battery and the main switchboard is positioned on the navigation bridge.

1.6.7.3. Visual and audible signals indicating failure of any navigation light with the switch in the "On" position shall be provided to the Navigation lights switchboard.

1.6.7.4. Flexible cables and Plug Connectors connect the Navigation lights to the network

1.6.7.5. In the navigation lights switchboard each navigation light non−safety voltage feeding circuit shall be of two wire type with a double−pole switch installed in it.

1.6.7.6. It is essential that the each navigation light non−safety voltage feeding circuit shall be provided with protection in both wires and with visual signal of appropriate functioning of each navigation light.

1.6.7.7. Installation of the visual signal of proper functioning of navigation lights need not to be done if navigation lights are positioned within the helmsman's sight distance.

1.6.7.8. The designing and installation of the visual signal shall be done in such a manner that its damage does not cause the disconnection of the navigation light. Allowable voltage drop on the supply switchboard of navigation lights 5 p.c. for voltage upto 30V & 3 pc over 30V.

.

1.7. Signalling and internal communication

1.7.1. Electric Engine-Room Telegraphs

1.7.1.1. In accordance with the specifications made in Part 6 of INTLREG Rules, the electric engine−room telegraphs shall comply with the applicable requirements.

1.7.1.2. Power Supply of the engine−room telegraphs shall be done from the main switch board or from the ship's control and monitoring console.

1.7.1.3. A visual signal of the presence of voltage in the power supply circuit shall be provided to the electric engine−room telegraphs.

1.7.1.4. An audible signal on the navigation bridge and in the machinery space shall be provided to each engine−room telegraph. This signal will be operating at communicating orders and switching off after receiving a correct response. The audible signal shall remain operating, when the response is incorrect.

1.7.1.5. Installation of the engine−rooms telegraphs on the navigation bridge shall be provided with scale lighting permitting adjustment of illumination intensity.

1.7.2. Internal Service Communication

1.7.2.1. An independent service communication system shall be provided between the navigation bridge and control stands of main engines where other types of communication facilities are not available, as well as between the navigation bridge and the steering gear compartment, which could be:

a. Telephone communication system
b. Loud master communicator.

1.7.2.2. The appropriate sources of power shall be provided with the communication means. The sources shall be capable of confirming telephone operation even in the absence of voltage from the main generators. Recommendations of non−battery telephone sets are given for use in telephone communication systems.

1.7.3. General Alarm System

1.7.3.1. General emergency alarm system shall be installed in all ships in which an alarm given by human voice or by any other means will not be heard simultaneously in all locations where people may be present. It shall be fitted to ensure good signal audibility in all such places.

1.7.3.2. Installation of Signalling devices shall be done in the following places:

- In machinery spaces,
- In corridors of accommodation, service and public spaces,
- On open decks.

1.7.3.3. It is required to check that continuous power supply shall be provided to the general alarm system in normal operating conditions, as well as in case of main generators failure. It is recommended that in the general alarm control station, a signal lamp indicating power supply in “On” mode shall be provided .

1.7.3.4. Activation of the general alarm signal shall be done from the navigation bridge. Alarm signal shall be activated manually by push−button or automatically by alarm generator.

The alarm shall continue to operate until it is manually turned off or overridden by the public address system broadcast, in the case of automatic activation.

1.7.4. Fire Detection System

1.7.4.1. In accordance with the specifications made in INTLREG Rules Part 5A and Part 6, Fire detection system shall comply with the applicable requirements.

1.7.4.2. In order to indicate starting of fire−extinguishing system, a warning alarm signal, be fitted and supplied from an accumulator battery. The warning alarm signal shall be supplied from an accumulator battery of the fire detection system if provision has been made for fire detection system.

1.8. Protection

1.8.1. General

The protective devices of the equipment under protection shall be such that they activate during an overcurrent in the circuit.

1.8.1.1. Overload protection shall be provided in:

a) Not less than one phase or a positive pole in a two wire system;

b) Each positive pole in a three-wire system;
c) Not less than two phases in an insulated three-wire three-phase current system;
d) All phases in a three-phase four-wire system.

1.8.1.2. In each insulated pole of a d.c. system or in each phase of an a.c. system, fitting of the short-circuit protective devices shall be done. Short-circuit protective devices shall be set to operate at not less than 200 per cent of the rated current of the electrical equipment being protected. Activation of the protective devices may be without time delay or with a time delay necessary for proper discrimination. In order to protect both the consumer itself and its supply cable, the short-circuit protective device may be used.

1.8.1.3. Unless the preceding protection device is capable of protecting the cable of reduced cross-sectional area, additional protection shall be provided for each of such cables where, cables of reduced cross-sectional area are used in some sections of a supply circuit.

1.8.1.4. Usage of protective devices precluding immediate repeated actuation after the activation of the protection shall not be done in supply circuits of the emergency switchboard as well as in supply circuits of emergency consumers.

1.8.2. Protection of generators

1.8.2.1. Provision of over-current and short-circuit protective devices shall be done to generators not intended for parallel operation. Generators that are rated at 30 kW and less, fuses may be used as protective devices.

1.8.2.2. Generators intended for parallel operation shall be provided at least with the following protective devices:

a. Against overloads;
b. Against short-circuit;
c. Against reverse current and reverse power;
d. Against under voltage.

Protective device used generator overload protection shall not prevent restarting possibility of the generator immediately.

Provision of devices automatically and selectively disconnecting non-essential services in the event of the generator over-current shall be done. Depending on the generator over-current capacity, those services may be disconnected in one or several steps. In case of crafts with electrical installations with sufficient power reserve, this requirement may be ignored, if approved by the Register.

1.8.2.3. In order to suit characteristics of the driving internal combustion engine, the protection of generators intended for parallel operation, against reverse current or reverse power shall be selected. The limits of settings for the protection types specified shall be in accordance with those given in Table 6.1.7.

Table 6.1.7

Kind of current	Limits of reverse current or reverse power protection settings
Alternating	8 to 15% of the generator rated power output, kW
Direct	2 to 15% of the generator rated current, A

Installation of the reverse current protection for d.c. generators shall be done in the pole opposite to that, in which the equalizer lead is connected. When the voltage applied is reduced by 50 percent, the reverse power or reverse current protection shall still be capable of operation, although the reverse current or reverse power may have altered values.

1.8.2.4. Under voltage protection shall ensure the possibility of a reliable connection of generators to busbars at a voltage of 85 per cent and more of the rated voltage and shall exclude the possibility of generator-to-busbars connection at a voltage less than 35% of the rated voltage. Besides, it shall switch off the generators in case of reduction of voltage across their terminals within 70 to 35 per cent of the rated value. In case of voltage reduction, the under voltage protection shall operate with a time delay for disconnection of generators from busbars and shall operate without a time delay at the attempt to make connection to the generator busbars before the minimum voltage specified above is reached.

1.8.2.5. In excitation systems of generators it is permitted to use fuses as protective devices for semiconductor elements.

1.8.3. Protection of electric motors

1.8.3.1. If the motor need not be automatically restarted, means of protection shall be provided to the outgoing feeders from switchboards supplying electric motors rated at over 0.5 kW against short-circuit current and overcurrent, as well as with no-voltage protection. Installation of the over-current and no-voltage protective devices may be done in the motor starting arrangements.

1.8.3.2. The over-current protective devices for continuously running motors shall switch off the motor under protection within the range from 105 to 125 per cent of the rated current. Replacement of the over-current protection of electric motors may be done by visual and audible alarm which is subject to special consideration by the Register in each case.

1.8.3.3. Over-current protective devices which operate on the principle of thermal relays basis, shall not be used in supply circuits of fire pump motors.

Replacement of the over-current protective devices may be done by visual and audible alarm.

1.8.4. Steering gear protection

1.8.4.1. Electric motors and control systems of electric or electro-hydraulic steering gear shall have only short circuit protection. Visual and audible alarm shall be provided to warn of the motor over-current and of the failure of any phase of the feeder supplying the motor. If bimetallic-strip relays are provided so as to warn of the motor over-current, they shall be selected for the 0.7 rated current of the electric motor. The protective device of steering gear control circuit shall be at least set at twice the peak current of the control circuit.

1.8.4.2. Circuit breakers that are used to protect the d.c. motors against short-circuit, shall be set for release without time delay at a current not less than 300 per cent and not higher than 400 per cent of the rated current of the motor under protection. While those used with a.c. motors shall be set for release without time delay at a current not less than 125 per cent of the peak starting current of the motor under protection. The rated current for the fuse links shall be one grade of rating higher than it follows from the values specified for the motor starting currents where fuses are used as protective devices.

1.8.4.3. Short-circuit and over-current protective devices shall be provided for electric motors used to drive the active means of the craft's steering.

Fitting of the over-current protective devices of the above-mentioned motors shall be done with visual and audible alarm in order to warn of the over-current and shall switch off the motor in the over the load range specified in 1.8.3.2.

The short-circuit protection shall be in compliance with the requirements of 1.8.4.2.

1.9. Cabling

1.9.1. General Requirements

1.9.1.1. In ships, cables and conductors allowed for use shall be noncombustible or flame−retardant type marine cables and conductors. These shall be tested in accordance with IEC Publication 60332−1 or an equivalent test procedure and shall meet the requirements of the present Chapter of the *Rule*s or the relevant national and international standards agreed with INTLREG, including IEC 60092−3, 60092−350 and 60092−376. In each particular case the use of other types of cables is matter to special consideration of INTLREG.

1.9.1.2. The present Chapter's requirements do not deal with the concentric and telephone cables.

1.9.2. Conductors

1.9.2.1. It is essential that the cable conductors planned for supplying essential services shall be of multi-wire type. Specifications of number of wires per conductor are made in Table 6.1.8.

Table 6.1.8

Item	Nominal cross-sectional area of conductor, [mm^2]	Minimum number of wires per conductor	
		Circular non-compacted conductors	Compacted circular and shaped conductors
1	0.5 – 6	7	–
2	10 – 16	7	6
3	25 – 35	19	6
4	50 – 70	19	15
5	95	37	15
6	120 – 185	37	30

1.9.2.2. In a reliable manner, separate wires in multi-wire conductors is spliced that it does not impair the mechanical or electrical properties of the wire and does not change the cross-section of the wire or that of the whole conductor. Splice-to-splice distances in separate wires along the length of conductor shall not be less than 500 mm.

1.9.2.3. A suitable alloy coating shall be done to separate wires of rubber-insulated copper conductors. If the manufacturer has taken actions to ensure that the rubber insulation will not affect undesirably to the metal of the conductor then tinning or other anticorrosive coating of external wiring or of all wires of a rubber insulated conductor

may be dispensed with.

No tinning is needed for conductors provided with other types of insulation.

1.9.3. **Insulating Materials**

1.9.3.1. In Table 6.1.9, the types of insulation which may be used for insulating current-carrying conductors in cables are specified. In each particular case, the usage of other types of insulation is matter of special consideration by INTLREG.

Table 6.1.9

Designation of insulation	Standard types of insulating materials	Permissible working temperature [1)], [_C]
PVC/A	Polyvinyl chloride compound – general purpose	60
V 75 PVC/D	Polyvinyl chloride compound – heat resisting quality	75
EPR	Ethylene-propylene rubber compound	85
XLPE	Cross-linked polyethylene compound	85
S 95	Silicone rubber compound	95
HF EPR	Halogen free ethylene propylene rubber	85
HF XLPE	Halogen free cross-linked polyethylene	85
HF S95	Halogen free silicon rubber	95
HF 85	Halogen free cross-linked polyolefin material	85

[1)] Temperature of the conductor assumed for the calculation of current rating in continuous service of cables.

1.9.4. **Cable Sheaths**

1.9.4.1. As per given materials in Table 6.1.10, Cable and conductor sheaths may be made. The use of other materials for cable sheaths is depending upon the discretion of INTLREG.

Table 6.1.10

Designation	Type of tight non-metallic cable sheath	Maximum working temperature of cable in sheath, [°C]
ST1	Polyvinyl chloride compound – general purpose	60
ST2	Polyvinyl chloride compound – heat resisting quality	85
SE1	Polychloroprene rubber compound	85

SH	Chlorosulfonized polyethylene compound	85
SHF1	Halogen free thermoplastics material	85
SHF2	Halogen free thermosetting material	85

1.9.4.2. Throughout the manufacturing length of cable, sheaths shall be of uniformed thickness, within permissible limits, and shall cover the cable cores concentrically. The sheaths shall form a resistant cover following to the protected cores.

1.9.5. **Protective Coverings**

1.9.5.1. Tinned copper wire shall be used in order to build metal screening braid. If plain copper wire is used, shall be protected by suitable sheaths. Non-screening braids may be of galvanized steel wires.

1.9.5.2. Metal armour shall be made of annealed steel wire or tape, galvanized and wound helically, with a suitable pitch, over the cable sheath or intermediate bedding over the sheath in such a way that a continuous cylindrical layer is formed to assure adequate protection and flexibility of the finished cable. At a special request, using the techniques described above, the armour may be built of non-magnetic metals.

1.9.5.3. For corrosion prevention cable armour or braid made of steel tape or wire shall be tinted.

1.9.5.4. Armour bedding shall be made of moisture resistant materials.

1.9.6. **Marking**

1.9.6.1. Marking of Rubber or polyvinyl-chloride-insulated cables having a limiting temperature at core over 60°C shall be done in such a manner that would permit their identification.

1.9.6.2. Cable conductors shall be marked in a way that would ensure durability of marking. In multi-core cables, marking with different colours shall be done in the cores which are arranged in several concentric layers, at least two adjacent cores in each layer.

1.9.7. **Wiring**

1.9.7.1. For internal wiring of switchboards and electrical devices, insulated single-core conductors shall be used.

1.9.7.2. Permission is given to non-insulated wires and busbars for use only for internal wiring of electrical devices.

1.9.8. **Cabling**

1.9.8.1. The maximum permissible temperature for the insulating material of the cable cores or conductors shall be at least 10_C higher than the maximum ambient temperature likely to exist in the space where the cable is installed.

1.9.8.2. The cables having a sheathing that will withstand the action of a given medium shall be used in locations that are affected by the action of crude oil products and other aggressive media.

Installation of cables of other types may be done in such locations; provided that they are laid in metallic pipes (Refer 1.9.8.33).

1.9.8.3. Cables shall have an appropriate armour in locations where they may be subjected to mechanical damage. In such locations, protection of unarmoured cables shall be done with special reliable covers or shall be installed in metallic pipes (see 1.9.8.33).

1.9.8.4. Installation of cables of antenna circuits leading to radio communication and radio navigation equipment, as well as echo sounder cables shall be done separately from other cables. In case of double screened cables, the above requirement is not obligatory.

1.9.8.5. Permissible continuous loads on single-core cables and on conductors that is insulated by various materials shall be in compliance with the values that are given in Table 6.1.11 (Refer also 1.9.8.9).

The values of loads that are given in the Table refer to the following cases of cable installation:

1. Installation of not more than 6 cables that are done in one bunch or one layer, adhering to one another;
2. In two layers, irrespective of the number of cables in the layer, provided that there exists clearance for free circulation of the cooling air between the group or bunch of six cables.

   In case where there are more than 6 cables installed in one bunch and maybe simultaneously loaded by the rated current or where there is lack of clearance for the cooling air circulation.

Table 6.1.11

Permissible current ratings in continuous service of single-core cables and conductors with various insulation at the ambient temperature of 45 C

Nominal Cross-sectional area of conductor, [mm²]	Permissible current rating in continuous service, A				
	Polyvinyl chloride	Polyvinyl chloride heat resisting quality	Butyl rubber	Ethylene-propylene rubber, cross-linked polyethylene	Silicon rubber and mineral insulation
	+ 60*	+75*	+80*	+85*	+95*
1	8	13	15	16	20
1.5	12	17	19	20	24
2.5	17	24	26	28	32
4	22	32	35	38	42
6	29	41	45	48	55
10	40	57	63	67	75
16	54	76	84	90	100
25	71	100	110	120	135
35	87	125	140	145	165
50	105	150	165	180	200
70	135	190	215	225	255
95	165	230	260	275	310
120	190	270	300	320	360

* Maximum permissible temperature of conductor, [°C].

1.9.8.6. In relation to the values that are given in Table 6.1.11, permissible current ratings for two-, three- or four-core cables shall be reduced, using the following correction factors:

0.85 – for two-core cables;

0.70 – for three- and four-core cables

1.9.8.7. Determination of permissible current ratings for cables and conductors that are installed in circuits with intermittent or short-time service, shall be done by multiplying the value of current rating in continuous service of these cables, calculated in accordance with Table 6.1.11 or according to 6.1.12, by the correction factor.

Table 6.1.12 Values of correction factors in relation to load

Nominal cross-sectional area of conductor, [mm²]	Intermittent service, 40%		Short-time service, 30 min.		Short-time service, 60 min.	
	Cables and conductors					
	with metal coverings	without metal coverings	with metal coverings	without metal coverings	with metal coverings	without metal coverings
1	1.24	1.09	1.06	1.06	1.06	1.06
1.5	1.26	1.09	1.06	1.06	1.06	1.06
2.5	1.27	1.10	1.06	1.06	1.06	1.06
4	1.30	1.14	1.06	1.06	1.06	1.06
6	1.33	1.17	1.06	1.06	1.06	1.06
10	1.36	1.21	1.08	1.06	1.06	1.06
16	1.40	1.26	1.09	1.06	1.06	1.06
25	1.42	1.30	1.12	1.07	1.06	1.06
35	1.44	1.33	1.14	1.07	1.07	1.06
50	1.46	1.37	1.17	1.08	1.08	1.06
70	1.47	1.40	1.21	1.09	1.09	1.06
95	1.49	1.42	1.25	1.12	1.11	1.07
120	1.50	1.44	1.28	1.14	1.12	1.07

1.9.8.8. Permissible current ratings for cables and conductors regarding different maximum insulation temperatures and different ambient temperatures in continuous, short-time and intermittent services may be chosen as per relevant Rules.

1.9.8.9. Demand Factors or corrections shall not be used when choosing cables for the final branch circuits of lighting or the heating appliances.

1.9.8.10. Installation of cables in parallel for the same polarity or phase shall be done of the same type, shall be run as close as possible to each other and shall have the same cross-sectional area of at least 10 mm² and the same length.

1.9.8.11. It is required that the voltage drop on the cables attaching the generators to the main switchboard or the emergency switchboard shall not exceed 1 per cent.

1.9.8.12. In normal operating conditions, the voltage drop on the cables between the busbars of the main switchboard and any electric consumers shall not exceed 6 per cent of the rated voltage. The value may be increased to 10 per cent for the consumers supplied from accumulator batteries of the voltage not exceeding 50 V; The voltage on terminals of the navigation lights shall not be lower than 95 percent of the rated

voltage for the light.

At short-time service, e.g. at starting the electric motors, a greater voltage drop is permissible if it does not adversely affect the work of the remaining electric consumers, not exceeding, however, 25 per cent of the rated voltage.

1.9.8.13. Cable runs which are likely to be exposed, shall be, as far as possible, straight and accessible and shall pass through such locations where cables are not affected by any oil, fuel, water and excessive heating.

Installations of cable runs shall be done not closer than 100 mm to the sources of heat.

1.9.8.14. In spaces subject to increased fire hazard through runs of cables is to be avoided.

Upon the agreement with INTLREG, an adequate protection of the cables shall be provided where running of cables in such locations is necessary.

1.9.8.15. For one device, cables of intrinsically safe circuits shall be used only and are to be separated from other cables.

1.9.8.16. From the double bottom and from the liquid fuel and lubrication oil tanks no cables shall be installed at a distance less than 50 mm. The distance of cables from the shell plating, as well as from fire-resistant and watertight and gastight bulkheads and decks shall be not less than 20 mm.

1.9.8.17. Installation of cables having external metallic sheathing may be done on structures of light alloys or be affixed in position with holders of such alloys only in cases where consistent anti-corrosive protection is provided.

1.9.8.18. A suitable protection of Cables installed in fishing vessels and factory ships at locations subjected to the action of salt shall be provided with covers or with salt-resistant sheathing.

1.9.8.19. It is recommended that installation of cables under the flooring of machinery

Spaces shall not be done. If such an installation is essential then cables shall be installed in metallic pipes or in closed ducts (Refer 1.9.8.33).

1.9.8.20. Installation of these feeders shall be done in different runs as far apart as possible from one another, both in horizontal and in vertical direction when equipment is supplied by two separate feeders.

1.9.8.21. If the cables are made of combustible materials then it is essential that these shall not be embedded in thermal or acoustic insulation. Cables shall be separated from such insulation with plating of non-combustible material or shall be located at a distance not less than 20 mm from the insulation.

Cables shall be calculated with the corresponding load reduction where they are installed in thermal or acoustic insulation made of noncombustible materials.

1.9.8.22. The minimum internal bending radii of the cables shall be not less than those as specifications are made in Table 6.1.13.

Table 6.1.13

Item	Type of cable		External diameter of cable, d, [mm]	Minimum bending radius
	Type of insulation	Type of protective covering		
1	Rubber or polyvinyl chloride	Armoured with metal tape or wire	Any	10 d
		Protected with braid of metal wires	Any	6 d
		Lead alloy and armour	Any	6 d
		Other sheathing	up to 9.5	3 d
			9.5 to 25.4	4 d
			over 25.4	6 d
2	Varnished cambric	any	Any	8 d
3	Mineral insulation	metal	up to 7	2 d
			7 to 12.7	3 d
			over 12.7	4 d
4	Ethylene-propylene rubber compound or cross-linked polyethylene compound	Semiconducting or metallic	25 and over	10 d

1.9.8.23. The materials shall be protected against fire by suitable fire protection means, such as surface plating, coating or impregnation where installations of cables are done in ducts and other structures made of combustible materials.

1.9.8.24. Fire resistant material shall be used for fastening cables.

The fastener surface shall be sufficiently wide and is to have no sharp edges.

The fasteners shall be selected in such a manner that the cables are fastened in position securely but without damage to their protective coverings.

Cables shall not be fastened directly to hull construction.

1.9.8.25. Distances between the cable fastening points in the case of horizontal installation shall not exceed the values given in Table 6.1.14. The distances maybe increased by 25% For vertical runs of cables, these distances may be increased by 25 per cent.

Table 6.1.14

External Diameter of cable, (mm)		Distance between fastening Points for cables, (mm)		
over	**Upto**	**Without Armour**	**With armour**	**With Mineral Insulation**
–	8	200	250	300
8	13	250	300	370
13	20	300	350	450
20	30	350	400	450
30	–	400	450	450

1.9.8.26. Installations of cable runs shall be done with a minimum number of crossings.
The bridge and the cable run crossing it over shall have an air gap not less than 5mm.

1.9.8.27. Penetration of watertight bulkheads and decks shall be made tight.
The bulkheads and decks cable penetration packing shall be such as not to impair the watertight integrity of the bulkhead or deck. Lining or bushings that will prevent damage to cables shall be provided.

1.9.8.28. Where cables pass through non-watertight bulkheads or elements of the ship's structure less than 6 mm thick, where bulkheads or the ship's structures are more than 6 mm thick, no lining or bushings are required, but the edges of the holes shall be rounded off.

1.9.8.29. Protection of cables passing through decks shall be provided against mechanical damage up to a suitable height above the deck, and in locations where mechanical damage is less probable – up to a height of at least 200 mm. Cable penetrations shall be filled with cable compound. For single cables, the use of glands is permitted instead of filling with compound.

1.9.8.30. Cables shall be fastened in such a manner that mechanical strains in cables are eliminated.

1.9.8.31. Flexible type cables, capable of absorbing vibrations shall be used in places where there are heavy vibrations. Cables placed in locations subject to heavy vibrations (running to devices placed on shock absorbers) shall be of flexible type, suitable for operating conditions and mounted in such manner as to protect against the effect of vibrations.

1.9.8.32. Installation of cables in pipes shall be avoided. Whenever needed, the use of pipes as mechanical protection shall be made under the following conditions:

- The cross-sectional area of all cables as measured on their outside diameters
- Shall not exceed 40 per cent of the inside cross-sectional area of the pipe (it does
- Not apply to installation of single cable),
- The accumulation of water inside a pipe shall be precluded; when required, ventilation holes shall be provided in the pipes,
- The inside surface of pipes shall be even, smooth and protected against corrosion,
- For voltages over 50 v, pipes shall be effectively earthed.

1.9.8.33. To fill the cable boxes in watertight bulkheads and decks, the use shall be made of packing compounds that have good adhesion to the inside surfaces of cable boxes and cable sheathing, are resistant to the action of water and oil products and maintain tightness in continuous service.

1.9.8.34. In order to prevent the entry of moisture inside the cable, ends of rubber-insulated cables, mineral-insulated cables and cables with metallic coating shall be so packed in proper manner.

1.9.8.35. Protective covering of a cable led into a device from below shall enter inside the device to not less than 10 mm above the inlet hole.

1.9.8.36. At the time of installation of cables, if it is found essential to make additional connections, they shall be effected in proper junction boxes provided with clamps.

Protection of the joint as a whole shall be provided against the influence of environmental conditions. It is upon the sole discretion of INTLREG that which method shall be selected to have permission for the use of cable connection and the application of cable connection.

SECTION 2 AUTOMATION

Contents

2.1. General

2.1.1. Application and basic requirements

2.1.1.1. Application of the requirements of this Part of the Rules shall be done to automated and remotely controlled machinery installations of small craft for which an automation mark **UM** to be added to the classification notation is assigned (Refer 2.2.7, Part 1 “Classification Regulations and Surveys”).

2.1.1.2. The requirements of this Part shall be complied with where the machinery installation of a craft is adapted to operation without permanent attendance of personnel in machinery spaces. The requirements of this Part do not cover craft with locally controlled outboard engines.

2.1.1.3. For craft with electrical propulsion plants, the level of automation to grant the automation mark in the class notation is subject to special consideration by the Register.

2.1.1.4. The mechanical, electrical and electronic equipment, as well as components of the automation systems and machinery themselves shall meet the requirements of relevant Parts of these Rules.

2.1.1.5. The requirements of this Part cover the automation equipment according to 1.1.3.2, as well as the cases when a craft, as a whole, is not assigned the mark **AUT** in the class notation.

2.1.2. Definitions and explanations

2.1.2.1. For the purpose of this Part of the Rules, the following definitions and explanations have been adopted:

Automated machinery plant: a plant fitted up with automated control of main and auxiliary machinery and their associated systems, remote monitoring, alarm and indication facilities;

Remote automated control system: a control system whereby a desired operating mode of a machinery can be set up from a remote control station with one move of control (e.g. handle) followed by automatic execution of all intermediate operations.

Remote control system : a control system which, when being used for executing intermediate operations, needs an Operator's action to manipulate controls located at the remote control station. Alarm system means equipment for signaling whenever the controlled parameters reach the preset limit values, or deviations of machinery and associated systems from normal working ranges occur.

Safety system: equipment to automatically influence, in a specific way, the operation of machinery under control in order to prevent an emergency or limit its consequences.

Indication system: equipment providing visual information on the values of certain physical parameters or on change of certain conditions in machinery and systems. Local control station means a control station fitted with controls, indicators and means of communication, intended for control of machinery and located in proximity to, or directly on, the machinery. Automation device means a part of automation system comprising components, which form a structural and functional unity.

Automatic component: a structurally independent item (e.g. amplifier, sensor, relay, logic element) used in automation devices and systems.

2.1.3. Scope of technical supervision

2.1.3.1. The Register shall be submitted the general provisions concerning classification procedure, technical supervision of craft being designed or constructed, manufacture of equipment and components thereof, surveys, as well as requirements for technical documentation on the craft, as a whole, for review and approval may be found in Part 1 "Classification Regulation and Surveys" of these Rules and in General Regulations for the Classification and Other Activity.

2.1.3.2. Subject to technical supervision, as applied to a craft, during manufacture and in service are automation components, devices and systems of the following:

a. Main machinery and propellers;
b. Electric power plants;
c. Auxiliary services machinery;
d. Auxiliary boilers;
e. Alarm systems;
f. Other systems as required by the register.

2.1.4. Technical documentation

2.1.4.1. For each item of automation equipment listed under 1.3.2, the technical documentation that is to be submitted to the Register shall be as follows:

a. Description of operational principle including technical parameters, scope of automated operations to be executed, operating conditions and other data;
b. General arrangement and layout;
c. Schematic circuit and functional diagrams;
d. Specification with indication of the materials used and accessories, where all used components and devices with their technical characteristics are shown;
e. List of monitored parameters for the alarm and safety systems;
f. Test program;
g. List of spare parts.

2.1.4.2. The register shall be submitted the technical documentation pertinent to automation, incorporated into the technical design documentation, for review prior to craft construction, in the scope stipulated in Part 1 “Classification Regulation and Surveys”.

2.2. Design of automation equipment

2.2.1. Requirements for Components and Units of Automatic Systems

2.2.1.1. Components and units used in automatic systems shall additionally comply with the requirements of the relevant Parts of the *Rules*.
Individual components and units of systems and their external connections shall be permanently and clearly marked. The marking shall ensure an easy identification with the drawings and, in the case of sensors – shall also indicate their purpose and the set point.

2.2.1.2. Damping arrangements (shock absorbers), which are used to protect components and units against the effect of shocks and vibrations, shall be provided with stops to protect them against damage in case of excessive rolling amplitudes.

2.2.1.3. Control elements intended for fixing the settings shall be secured against unintentional change of the position. Provision is to be made for their repeated securing in case of readjustment.

2.2.1.4. Conducting surfaces of plug-in connections shall be of such design as to prevent the increase of contact resistance limiting the correct operation of the equipment.

2.2.1.5. At the terminals of cables and bunches of conductors to components, as well as the connections to moving parts, means shall be provided to relieve the components from the effect of tension of cables and conductors.

2.2.1.6. Replaceable blocks (printed cards) with plug-in connections shall be so designed as to preclude the possibility of erroneous replacement. They should also be capable of being effectively and permanently fixed in working position. Where necessary, due

to design or functional features of the component or unit, the permanent marking of correct mounting position shall be provided or the component or unit itself shall be so designed as to preclude mounting in the wrong position.

2.2.1.7. Printed circuit cards shall be covered with electro insulating varnish on the side on which current lines are located.

2.2.1.8. Final control elements (servo-motors, controllers, etc.) shall be so designed that no uncontrollable movement of their working parts is possible.

2.2.1.9. Pneumatic and hydraulic components and units shall withstand, without damage, short-time overloads caused by an increase of the working medium pressure equal to 1.5 times the rated value.

2.2.1.10. Pressure sensors shall be connected to the piping installation by means of 3-way cocks in order to supply the testing pressure, de-aeration of the piping and disconnecting of the damaged sensor.

2.2.2. Requirements for Automatic Systems

2.2.2.1. All control systems essential for the operation of the ship propulsion, machinery control and safety shall operate independently or shall be so designed that a failure in one of those systems will not interfere with the operation of the other systems.

2.2.2.2. Electric and electronic circuits of automatic systems shall be provided with means of protection capable of selective disconnecting the damaged parts of the system.

2.2.2.3. Each automatic system shall be so designed that failure in one circuit of lamps, sirens and similar signaling devices will not interfere with the operation of other circuits.

2.2.2.4. Failure of power supply to automatic or remote control systems shall not to result in hazardous running conditions.

2.2.2.5. Automatic systems shall be built of such components and units that their replacement with the other make of the same type and specification does not affect the operation of the system. If readjustment is necessary, it should be possible by simple means.

2.2.2.6. Automatic systems shall be protected against malfunctions as a result of Transient and or short time deviations of parameters due to rolling and pitching, starting or stopping of the machinery or due to other similar other phenomenon causing fluctuation of parameters from normal.

2.2.2.7. Automatic systems shall be so designed that typical failures of such systems will not result in hazardous conditions and will not lead to the secondary failures in the system itself and in automated machinery concerned.

2.2.2.8. Automatic restart of controlled machinery after its stopping by the safety system shall be prevented for each automatic or remote control system. The same shall be possible after manual reset (e.g. by control lever being brought to start position).

2.2.2.9. Provision for permanent and easy access for replaceable and controllable components, as well as the test points shall be available.

2.2.2.10. Components or units of automatic systems shall be so designed as to ensure the possibility of their checking and calibration during operation.

2.2.2.11. Measuring range of analogue sensors shall be at least 20% greater than the expected deviation of the input signal value (measured parameter).

2.2.2.12. Pneumatic systems shall be fitted with effective means for ensuring the required degree of purity and dryness of air supplied.

2.2.2.13. In supply piping of pneumatic systems, safety valves shall be provided to prevent an increase of pressure by more than 0.1 per cent of the working pressure.

2.2.2.14. Where components and units requiring forced cooling are used, effective means are to be provided to prevent their damage in case of cooling failure. Measures shall be also taken to enable components or units to operate in case of contamination by the cooling air.

2.2.2.15. Where provision has not been made for the machinery space to be continuously attended, the scope of the necessary remote or automatic control is subject to special consideration of Register, having regard to the location of control station, machinery supervision procedure and machinery service characteristics.

2.2.3. Automated main machinery

2.2.3.1. Automated main machinery shall be provided with:

a. devices for remote automated control from the wheelhouse;
b. visual alarm to indicate the availability of the main machinery for service;
c. alarms to indicate malfunction in the control system and the limiting values of monitored parameters;
d. activation of automatic safety devices when the monitored parameters fall beyond the limits of the allowed parameters being of potential menace of accident, as well as an alarm system to give warning signal at operation of safety devices;
e. a device to transfer control of the main machinery from automatic to manual mode from a local control station regardless of the position of handle at the remote control station.

2.2.3.2. Hydraulic and pneumatic control systems shall be supplied from two sources. With application of an alarm signal, the second source shall be automatically connected upon pressure loss.

2.2.3.3. Electric and electronic control systems shall be supplied from both the main and emergency power sources. Power circuits for control systems shall be independent of the power circuits for safety and alarm systems.

2.2.3.4. Provision of the automatic shut-down of the faulty engine shall be done by the safety system in installations with two or more engines driving one shaft, so that the rest keep the craft running and maneuvering.

Protection system of main engines, except for over speed protection , shall be disconnectable, with the signal of disconnection being activated in the wheelhouse and at the control stations of machinery space.

2.2.3.5. A device that is independent of the control and alarm systems, shall be provided for emergency shut-down of the main engine.

2.2.3.6. Failure of remote control system of the main machinery shall not cause an increase in the craft speed, change in the propeller thrust direction, or in advertent starting of the main machinery, and also immediate stop of the engine from the remote control station shall be made possible.

2.2.3.7. Changeover from one power supply source to another shall be effected manually from the control station, or automatically depending on the system functionality if malfunctions occur in power system for the control systems.

2.2.3.8. In craft with main machinery having power of 220 kW and less, with attached auxiliaries, the composition of the monitoring, alarm and protection means maybe reduced.

2.2.3.9. Use of the remote control systems may be allowed for engines with power of 220 kW and less.

2.2.3.10. For auxiliary machinery, which are required to operate under definite service conditions only, provision may be made for control from the wheelhouse with application of alarm signal and indication of starting thereof, if needed.

2.2.3.11. Automatic controlling of the pressure and temperature in essential systems of the machinery installation shall be done.

2.2.4. Automated electric power machinery with automated control system

2.2.4.1. For supplying the craft with electric power, technical properties of the craft's electric power plant consisting of several generating sets with only one generator in operation, shall satisfy the following requirements:

a. Automatic starting of standby generating set in case of loss of the generator in operation (black-out condition);
b. Remote starting of standby generator in case of emergency alarm operation;
c. Automatic connecting of the standby generator set to main switchboard and taking over of the load, with mandatory disconnection of the set which was

hitherto in operation from the busbars;

d. Automatic switching off of non-essential consumers when the generator is overloaded.

2.2.4.2. Where the generators run in parallel the technical properties of the craft's electrical power machinery shall provide uninterrupted electric power supply, ensuring the following:

a. Sequence in which the generators shall be started shall be determined & thereafter automatic starting of standby generating sets

b. Automatic synchronization, switching on and sharing of load;

c. Automatic switching off of non-essential consumers when the generator (s) is (are) overloaded.

2.2.4.3. For supplying the craft with electric power, technical properties of the craft's electric power plant consisting of one generating set shall satisfy the following requirements:

a. remote starting and switching on of generator

b. Automatic switching off of non-essential consumers when the generator is overloaded.

2.2.4.4. When voltage in the craft's mains after black out is restored ,in accordance with a specified program the starting of the key machinery essential for steering the boat shall be effected automatically and in such a way that the electric power plant is not overloaded.

2.2.4.5. Prime movers of the generators with automatic starting feature shall be ready to be started immediately. An indicator shall be provided in order to warn that automatic starting is impossible when the prime movers are not ready to be started immediately.

2.2.4.6. When the diesel-generator is started and main switchboard is supplied by the shaft generator provision shall be made for automatic switching off of the shaft generator irrespective of the voltage (frequency) status on main switchboard where parallel running of shaft generator and diesel-generator is not provided,. In case where the shaft generator and diesel-generator run separately to supply the main switchboard sections which are not interconnected, the shaft generator may be not switched off.

2.2.4.7. Provision may be made for diesel-generators with a device for remote starting and stopping of the prime movers, synchronization, switching on and sharing of load from the wheelhouse.

2.2.4.8. Table 6.2.1 shall contain monitored parameters of the automated electric power plants (except for the emergency ones), measuring points, limiting values of parameters and types of automatic protection and parameter indication.

2.2.5. Automated boiler plants

2.2.5.1. The requirements of the present Chapter cover boiler plants with oil-burning installations.

2.2.5.2. Remote shut-down provision shall be made for the boiler plants from the control station where continuous watch is kept.

2.2.5.3. The oil supply to the burners shall be cut off automatically in the following cases, as far as the oil-burning installations are concerned:

a. Absence of flame for not more than 5 s from the moment the oil supply begins;

b. Degradation of parameters of air intended for fuel oil atomization;

c. Insufficient pre-ventilation of the burner furnace.

2.2.5.4. Starting of boiler plants from cold condition and after being shut down by protection system shall be possible from the local control station only.

Depending on temperature in the boiler, provision in the device which regulates direction of for automatic changeover of exhaust gas flow through the boiler or directly into the atmosphere shall be available in the automation system of exhaust gas water heating boilers operating under pressure

2.2.6. Automated bilge plants of machinery spaces

2.2.6.1. The automated bilge plants shall put automatically the relevant bilge pumps in operation depending on the water level in wells. Alarm to indicate pump operation shall be provided.

2.2.6.2. Even after the starting of bilge pumps, the water level in the bilge wells goes on rising or does not fall, an alarm shall be activated.

2.2.6.3. A separate sensor which would be independent of the sensors provided to control the bilge pumps shall be provided to signal of the highest possible level.

2.2.7. Automated compressor plants

2.2.7.1. Automatic replenishment of starting air receivers, tyfon, as well as the amount of air to feed automation systems shall be made. Provision shall be also made for starting and stopping thereof from the wheelhouse in case for automated operation of compressors.

2.2.7.2. Compressed air system shall be provided with automatic drainage devices

2.2.7.3. When the pressure in air receivers drops by not more than 30 per cent of the nominal pressure, air compressors shall be automatically started and shut down when the pressure reaches 97 to 103 per cent of the nominal one.

2.2.8. Automated pumping units

2.2.8.1. Crafts with automated pump control system shall ensure automatic starting of standby pumps and changeover, as necessary in the relevant systems, in case of pump failure and/or upon reaching the highest permissible deviations of parameters in the systems. Simultaneous activation of alarm system shall be made to indicate pump which is faulty and of standby pump starting.

2.2.9. Equipment arrangement in wheelhouse

2.2.9.1. Provision shall be available for remote control of main and auxiliary machinery and propellers.

2.2.9.2. Provision shall be made for independent emergency stop of main engine from the wheelhouse.

Alarm system shall be provided in order to inform about fault in machinery and plants in machinery space, Also means shall be there to show speed and direction of propeller rotation, as well as the pitch of CPP

2.2.9.3. Means shall be there to show engagement/disengagement position of the coupling of the main machinery, provisions shall be made.

2.2.9.4. Provision for the following separate alarms shall be made:

“Water in machinery space”, “Fire in machinery space”, “Alarm system failure”.

2.2.9.5. For adapting manipulation by one person, control, indication and alarm devices in the wheelhouse shall be positioned on desks. Arrangement of the visual indicators shall be done to avoid glare and to have clear vision. Provision shall be made for dimming of the indicating system lamps.

2.2.9.6. Subjected to the agreement with the Register, reduction of the scope and list of the automation system facilities may be done in boats with open machinery space, open navigating bridge, with main machinery of total power less than 220 kW and outboard engines.

2.2.10. Arrangement in machinery spaces

2.2.10.1. Provision of the local control station of the main machinery shall be done.

2.2.10.2. Provision shall be made for a panel for alarms and indication of parameters, arranged in the vicinity of the control station of the main machinery.

2.2.10.3. Installation of the controls of auxiliaries shall be done in close proximity to the local control station of the main machinery.

2.2.10.4. For the main engines with power less than 220 kW, with mechanical remote control system, the local control stations and alarm panels may be dispensed with.

2.2.11. Alarm and indication systems of machinery installation and their protection’

2.2.11.1. If operating parameters fall beyond the allowable limits, the alarm system of the machinery installation shall give visual and audible signals . The alarm signal shall not be activated when allowable deviations of the operating parameters are caused by maneuvering of the facilities Alarm activation shall be done in the engine room and in wheelhouse.

2.2.11.2. The alarm system shall give visual and audible warning signals at:

a. Monitored parameters reaching predetermined limit values;
b. Operation of protection devices;
c. Power failure of particular automation systems;

d. Starting of emergency power sources.

The above is regardless of the extent of automation & monitoring requirement of Machinery.

The visual signals shall be given as flashing lights. The flashing light shall change to steady light after being acknowledged. After the fault has been cleared, only then the canceling of a visual signal shall be possible.

2.2.11.3. In the crew's accommodation and service spaces, the engineer's alarm shall be activated for the call of the engineers to machinery space. It shall be activated manually, or automatically where an alarm system has not been acknowledged.

2.2.11.4. Subjected to the agreement with the Register, reduction of the outboard engines and mechanical remote control system the range of alarm signals may be done for machinery installations with main engines having power less than 220 kW.

2.2.11.5. Provision of the protection systems of automated machinery shall be done for those parameters only the deviations of which can lead to serious damage, complete failure of the machinery.

2.2.11.6. Designing of the indication system shall be done in such a way that the readings are displayed in units normally used for parameters, i.e. without recalculation.

2.2.11.7. Table 6.2.1 shall contain monitored parameters of machinery and systems, measuring points, limiting values of parameters and types of automatic protection and parameter indication.

2.2.11.8. Information on limiting values of parameters and their indication and types of protection shall be included in the OEM manual.

Table 6.2.1

No.	Monitored parameter	Measuring point	Alarm for limiting values of parameters	Automatic protection	Indication of parameters in wheelhouse	Comments
1	2	3	4	5	6	7
1	**Main internal combustion engines**					
1.1	Lubricating oil pressure	At engine inlet	Min.	Engine shut-down	Continuous or on call	-
1.2	Lubricating oil temperature	At engine inlet	Max.	-	Continuous or on call	-

1.3	Lubricating oil pressure drop	Filter	Max.	-	Continuous or on call	-
1.4	Coolant pressure or flow	At engine outlet	Min.	Slow-down	Continuous or on call	-
1.5	Coolant temperature	At engine outlet	Max.	Slow-down	Continuous or on call	-
1.6	Coolant level	Expansion tank	Min.	-	-	For independent tank
1.7	Cooling sea water pressure or flow	Sea water cooling system	Min.	-	Continuous or on call	-
1.8	Main pipe	Main pipe	Max.	-	-	-
1.9	Starting air pressure	Before starting valve	Min.	-	-	-
1.10	Control air pressure	Engine control system	Min.	-	-	-
1.11	Fuel oil level	Daily service tank	Min.	-	-	-
1.12	Fuel oil leakage	From high pressure piping	Presence of fuel oil	-	-	-
1.13	Engine speed	-	Max.	Engine shut-down	Continuous or on call	-
1.14	Power supply to remote automated control, alarm and	At inlet of systems	Failure of power supply	-	-	-

	safety systems					
1.15	Oil pressure in CP propeller hydraulic system	At filter outlet	Min.	-	Continuous or on call	-
1.16	CP-propeller hydraulic oil level	Header tank	Min.	-	-	-
2	**Reduction gear**					
2.1	Lubricating oil pressure	At reduction gear inlet	Min.	Engine shut–down	-	-
2.2	Lubricating oil temperature	In reduction gear	Max.	-	-	-
3	**Internal combustion engines for driving generators**					
3.1	Lubricating oil pressure	At engine inlet	Min.	Engine shut-down	-	-
3.2	Coolant pressure or flow	At engine inlet	Min.	-	-	-
3.3	Coolant temperature	At engine inlet	Max.	-	-	-
3.4	Engine speed	Limiting governor	Max.	Engine shut-down	-	-
4	**Electric installation**					
4.1	Voltage	Main switchboard	Min., max.	-	-	-
4.2	Insulation resistance	Main switchboard	Min.	-	-	-
5	**Starting compressors**					
5.1	Air temperature	At compressor outlet	Max.	Compressor shut-down	-	-
6	**Tanks**					

6.1	Leakage fuel oil level	Leakage fuel oil tank	Max.	-	-	-
6.2	Fuel oil level	Daily service tanks	Min.	-	-	-
6.3	Domestic waste and sewage water level	Tanks	Max.	-	-	-
7	**Bilge plants**					
7.1	Emergency water level	Bilge wells	Max.	-	-	Alarm signal is activated in wheelhouse
8	**Miscellaneous**					
8.1	Safety system of boiler plant	Feeding unit	Failure	Boiler shut-down	-	-
8.2	Alarm system	Feeding unit	Failure	-	-	-
8.3	Protection system	Feeding unit	Failure	-	-	-

SECTION 3 RADIO AND NAVIGATIONAL EQUIPMENT

Contents

3.1. General

3.1.1. Requirements of this part of the Rules apply to radio and navigational equipment of small pleasure craft. Provisions of Part 6 (Chapter-5) “Navigational of the Main Rules of Sea-Going Ships shall be also referred without contradicting provisions of this chapter.

3.2. Radio equipment

3.2.1. Functional requirements

3.2.1.1. Installed aboard craft radio equipment shall be capable:

a. Of transmitting ship-to-shore distress alerts;
b. Of receiving shore-to-ship distress alerts;
c. Of transmitting and receiving ship-to-ship distress alerts;
d. Of transmitting and receiving on-scene communication;
e. Of transmitting of signals for locating;
f. Receipt of navigational and meteorological warnings and other urgent information on safety of life at sea.

3.2.2. Structure of craft radio equipment

3.2.2.1. Small pleasure craft shall have radio equipment aboard, meeting Navigation (GMDSS) requirement according to the structure listed in Table 6.3.1 based on the sea areas and distance from shelter place. Radio equipment of the craft of unrestricted area of navigation shall comply with the GMDSS requirement. And the structure of radio equipment of craft of unrestricted area of navigation constitutes a subject of special consideration by the Register.

Self-propelled craft with capacity of propulsive engine not less than 55 kW and non-self-propelled craft of gross register tonnage of 80 and more designated for operation on inland waterways shall be furnished with VHF radiotelephony station The relevant rules of Administration of the states shall regulate navigation on inland waterways in those states.

3.2.2.2. Mounting of the aerials shall be at maximum practicable height. The ship shall be provided with emergency aerial if the antenna is mounted on a mast bearing sails.

3.2.2.3. Operation instructions for installed radio equipment aboard shall ensure radio communications on distress, urgency or safety and shall be posted in locations of the radio equipment.

Table 6.3.1					
GMDSS Sea Areas	**A1, A2 and A3[1]**	**A1 and A2**	**A1**		
Distance from shelter place (no more than)	Unrestricted	150 miles	20 miles	3 miles	200 m
VHF radiotelephony station with DSC encoder	2	1	1	–	–
MF radiotelephony station with DSC encoder[2]	1	1	–	–	–
INMARSAT ship earth station or MF/HF radiotelephony installation with DSC encoder device	1	–	–	–	–
NAVTEX service receiver	1	1	R	–	–
COSPAS-SARSAT system satellite EPIRB	1	1	R	–	–
Radar transponder	1	1	R		–
Two-way VHF radiotelephone apparatus	2	1	1	1[3]	–

[1] Structure of radio equipment of ships of unrestricted area of navigation constitutes a subject of special consideration by the Register.

[2] Not required, if MF/HF radio station with DSC coding device is installed.

[3] Not required, if fixed VHF radiotelephony station is installed.

Remarks:

R – recommended; structure of fitted aboard craft radio equipment shall ensure fulfillment of all functional requirements listed in 2.1.

3.2.2.4. As per requirement of this chapter, each craft provided with radio equipment and navigating at a distance of more than 3 miles from shelter places shall carry at least one person qualified for distress and safety radio communication purposes. This qualified person shall be a holder of the relevant certificate.

3.2.2.5. As required by this chapter, each craft provided with radio equipment which shall possess a duly issued license thereby authorizing its operation.

3.2.3. Sources of electrical power

3.2.3.1. Two sources of electrical power, main and auxiliary, shall be provided to supply radio equipment on board craft.

3.2.3.2. Continuous power supply shall be ensured for operation of radio installations and charging of the reserve source of electrical power during all the time of sea voyage.

3.2.3.3. Reserve source of power supply, which is independent of main source of power, shall be provided for maintaining radio communications in distress and for the purposes of safety for at least 1 hour in case of failure of the main source of power supply and, emergency source of electrical power if fitted.

3.2.3.4. During flooding, to preclude failure, reserve source of electrical power (radio equipment accumulator battery) shall be positioned as high as practicable.

3.2.3.5. Means of automatic charging devices shall be provided and shall be capable of recharging the accumulator battery within 10 hours if the reserve source of electrical power consists of rechargeable accumulator battery.

3.3. Navigational equipment

3.3.1. General

Depending on design category and distance from shelter place small pleasure craft shall be equipped with navigational equipment as per requirements of Table 6.3.2

3.3.1.1. At a distance more than 20 miles off shelter place, sailing craft of design categories **R**, **R100**, **R200,R300** and **B** shall be provided with anemometer and clinometer. At each steering position, multi-hull sailing craft shall be provided with anemometer thus enabling indication of wind velocity.

3.3.1.2. At a distance of more than 20 miles off shelter place, Categories **R**, **R100**, **R200 R300 A2** and **B** craft shall carry International Signal Code, up-to-date nautical charts and nautical publications that are necessary for the intended voyage. In electronic format, usage of nautical charts and nautical publications are allowed.

3.3.2. Magnetic compass

3.3.2.1. Provision of the effective magnetic compass, or other heading finding device, and means of correcting heading and bearing (valid deviation table annually renewed) shall be done to the crafts.

3.3.2.2. Duly corrected magnetic compass or other means shall be independent of main source of electrical power.

Table 6.3.2

Ship design category	**R**	**R200**	**R100**	**B**	**C**	**C1**	**C2**	**C3**	**D**
Distance of shelter place (not more than)	**Unrestricted**	**200 miles**	**100 miles**	**50 miles**	**20 miles**	**15 miles**	**6 miles**	**1 km**	**200 m**
Magnetic compass	1	1	1	1	1	1	1	–	–

Radio navigation system receiver	1	1	1	1	1	–	–	–	–
Radar	1	1	1	1	R	–	–	–	–
Echo sounder	1	1	1	1	R	–	–	–	–
Log[1]	1	1	1	1	–	–	–	–	–
Equipment of the Automatic Identification System (AIS)	R	R	R	R	–	–	–	–	–
Radar reflector[2]	1	1	1	1	1	1	1	–	
Barometer	1	1	1	1					
Daylight signal lantern	1	1	1	1	1	1			

[1] –log may not be fitted, if radio navigation system receiver ensures continuous and reliable measurement of passed distance in the area of intended navigation.

[2] – not required, if ship's effective echoing area is sufficient to enable detection by radar.

Remarks:

P – recommended.

3.3.2.3. An option of compensation of magnetic compass deviation shall be ensured including one for heel and by coefficients B, C and D (Refer standard ISO 1069), if the craft's hull is metal.

3.3.2.4. At the craft's conning position, the magnetic compass and its repeater shall be positioned so as to ensure taking express readings of the compass card by a Helmsman. A lighting of the compass card shall be provided for craft making night time voyages.

3.3.2.5. As far as practicable, the craft shall be provided with a bearing device for taking bearings over an arc of the horizon of 360°.

3.3.3. Radio navigation system receiver

3.3.3.1. At any time during expected voyage, automatic position indication shall be ensured by Radio navigation system receiver.

3.3.3.2. Craft position shall be made available automatically from radio navigation system receiver to the craft radio equipment intended for distress alert.

3.3.3.3. The power to the receiver shall be supplied from main, emergency (if available) and reserve (GMDSS equipment accumulator battery) source of electrical power.

CHAPTER 7 FIRE PROTECTION

CONTENTS

SECTION 1 GENERAL

Contents

1.1. Scope of Application

1.1.1. Application of the requirements of the present Part of the Rules are done to craft that is referred to in Section 1 of the General Regulations within the scope of requirements set forth in the relevant Sections of this part.

1.1.2. The Register shall specially consider the fire protection of craft where solid fuel is used.

1.2. Definitions and Explanations

1.2.1. For the purpose of this Part of the Rules, the following definitions and explanations apply:

Fire-extinguishing system that is automatically activated by a special device when a preset temperature limit is reached is Automatic fire extinguishing system.

Petrol is hydrocarbon fuel, or blends thereof, which is liquid at atmospheric pressure and is used in spark-ignition engines. Kerosene is not regarded as petrol in this context.

Any door, hatch or any other aperture which leads to open air either directly or via other sections of the craft is known as exit.

Diesel fuel is hydrocarbon fuel, or blends thereof, which is liquid at atmospheric pressure and used in compression ignition engines.

Accessible means capable of being reached for inspection, including use of appropriate tools without the removal of permanent craft structure or any item of equipment.

Readily accessible means capable of being reached quickly with opening of closing appliances without the use of any tools

The short-cut from any manned location within the enclosed craft's space to the nearest exit to the exposed deck is known as Escape route.

Structural fire protection is a complex of passive means of the structural fire protection intended for:

Prevention of fire;

Containment of flame and smoke spreading throughout the craft;

Creation of conditions for safe evacuation of people from the craft's spaces and from the craft, as well as for effective fire extinction

Steel or other equivalent material is a non-combustible material which by itself or due to insulation provided, has structural and fire integrity properties equivalent to steel at the end of applicable fire exposure to the standard fire test (e.g. aluminium alloy with appropriate insulation).

Machinery areas are compartment or space of exposed type or enclosed by a casing, which contains an internal combustion engine.

Machinery spaces are spaces containing main machinery, shafting, boilers, internal combustion engines, electric generators and other main electrical machinery, ventilation and air conditioning installations, steering engines and other similar equipment.

Low flame spread means that the surface thus described will adequately restrict the spread of flame, this being determined in accordance with the provisions of IMO Resolution A.754 (18) “Recommendations on Fire Resistance Tests of “A”, “B” and “F” Class Divisions” with regard to the provisions of the “International Code for Application of Fire Test Procedures” 1, as adopted by the IMO Maritime Safety Committee by Resolution MSC. 61(67), as amended.

Non – combustible, fire–resisting and fire retarding divisions mean respectively, “A” or “B” class divisions, as defined below. The fire-resisting and fire-retarding divisions shall be subjected to fire test in accordance with the Fire Test Procedures Code.

Non-combustible material is material which neither burns nor gives off flammable vapors in sufficient quantity to self-ignition when heated to 750 °C. Any other material shall be regarded as combustible.

Fire-retarding or “B” c lass divisions are those divisions formed by bulkheads, decks, ceilings or linings which shall comply with the following criteria:

With the exception that combustible veneers may be permitted (Refer 2.3.13), they are fully constructed of non-combustible materials;

They are constructed as to be capable of preventing the passage of flame to the end of 30 min. of the standard fire test;

They have an insulation value such that the average temperature of the unexposed side will not rise more than 140 °C above the original temperature, nor will the temperature at any one point, including any joint, rise more than 225 °C above the original temperature when either side is exposed to flame, within the time listed below: class”B-15” – during 15 min, class “B-0” – during 0 min.

Fire - resisting or “A” class divisions are those divisions formed by bulkheads or decks which comply with the following criteria:

They are constructed of steel or other equivalent material;

They are suitably stiffened;

They are capable of preventing the passage of smoke and flame to the end of 60 min. standard fire test;

Insulation with approved non-combustible materials shall be done such that the average temperature of the unexposed side will not rise more than 140°C above the original temperature, nor will the temperature, at any one point, including any joint, rise more than 180°C above the original temperature within the time listed below: class “A-60” –during 60 min; class “A-30” – during 30 min; class “A-15”– during 15 min; class “A-0” – during 0 min.

Hazardous area is location where an increased risk of fire actually exists due to:

Presence of open flames (stove, heater, permanently installed lamps, etc.);

Presence of heat and/or the possibility of electric sparks near flammable liquids/vapors (e.g. in machinery space);

Possibility of electric sparks near flammable liquids/vapors (e.g. in fuel spaces with live electrical equipment);

Electrical equipment (main switchboard, battery banks)

An open or enclosed space so as to accommodate cooking stove is Galley space.

A fixed system which is intended for supply of a fire extinguishing medium to the protected spaces or directly therein and structurally fixed to the craft’s hull is Fire extinguishing system.

Fire-fighting outfit is portable firefighting equipment. Among these are fire hoses with connected fittings, fire hose nozzles, portable fire extinguishers, fire blankets, fog applicators, fire buckets.

Standard fire test is test carried out in accordance with the Fire Test Procedures Code.

Fuel space is a specially allocated space on board,containing permanently installed fuel tank or intended for the storage of portable fuel tanks.

Fuel area is an exposed or enclosed area where fuel pipelines, fittings, fuel tanks or an area intended for the storage of portable fuel tank or engine with fuel tank.

Fire extinguishing media means media used for extinguishing fire by filling of a protected space with a medium not sustaining combustion.

Open-flame device is any appliance where direct bodily contact with an open flame is possible.

Room–sealed appliance is a unit having a combustion system in which incoming combustion air and outgoing combustion products pass through sealed ductwork connected to the enclosed combustion chamber and terminating outside the craft.

1.3. Scope of Technical Supervision

1.3.1. The Register shall be submitted the general provisions for the procedures of classification, supervision during craft construction, manufacture of materials and products, classification surveys, as well as the requirements for the technical documentation in order to review and approval are set out in the General Regulations and in Part1 “Classification Regulation and Surveys”.

1.3.2. Subject to the Register supervision are:

.1. structural fire protection;
.2. materials the requirements for which, as regards fire hazardous properties thereof, are set by this Part;
.3. fire extinguishing systems;
.4. fire-fighting outfit,

Within the scope of requirements specified by this Part of the Rules

1.4. Technical Documentation

1.4.1. The Register shall be submitted the Technical documentation on fire protection of a craft shall for the review prior to commencement of the craft construction, within the scope given in Part 1 “Classification Regulation and Surveys”.

SECTION 2 STRUCTURAL FIRE PROTECTION

Contents

2.1. General

2.1.1. In working out measures in order to prevent origination and spread of fire, particular attention shall be given to the following zones and spaces on board the craft:

Machinery spaces, places with high air temperature and areas around the engines;

Fuel spaces, places where fuel filling holes are fitted and unprotected fuel pipelines;

Areas around the open-flame devices;

Galleys and liquefied gas systems;

Areas above the heated parts of machinery in order to avoid laying of electric cables under them;

Structural fire protection zones with structures adjacent thereto;

Main and spare exits from the spaces of the craft

2.2. Requirements for Layout

2.2.1. In order to clean, compartments inside the craft that may contain spillage of flammable liquids shall be accessible.

2.2.2. Compartments that contain petrol engines or petrol tanks shall be separated from adjacent compartments.

If the structure fulfills the following requirements, then this condition is met:

a) The boundaries are continuously sealed;
b) Penetrations for cables, piping, etc. are closed by suitable seals;
c) Doors, hatches and similar openings for passage or access are secured in the closed position;
d) Demonstration of the effectiveness of the boundary joints or sealings is done either by documentation or by test.

2.2.3. Arrangement of petrol tanks shall be done in compliance with the requirements set out in INTLREG Rules Part 6.

2.2.4. Passages through compartments shall not be blocked. Minimum width of the passages shall not be less than 500 mm.

2.3. Requirement for Materials and Design of the Fire Protection

2.3.1. Application of the structural fire protection requirements are done to craft which are intended in the operate the navigational areas R**, R100, R200,R300, B** and **C.**

2.3.2. The hulls of the craft of design categories **R, R100, R200,R300** and **B** shall be made of non-combustible materials.

The equivalence of the structural fire protection shall be ensured by an unconditional fulfillment of the requirements of 2.3.4 and 2.3.12, where for this purpose aluminium alloys and/or combustible materials are used. For timber based materials, the temperature indicated in 2.3.12.1 shall not be higher than 150°C.

2.3.3. Combustible materials shall be used for the manufacturing of the hulls of the craft of design category C, but the protection of the hull structures shall done from ignition in all spaces inside the hull, which may be placed into hazardous areas or are intended for crew or passengers, or in which control stations are situated, by properly installed non-combustible insulation and lining so that such structural protection is identical to the B-15 class division.

2.3.4. For the machinery spaces, their casings and spaces intended for the storage of combustible liquids, the structural protection shall be identical to A-30 class in craft which are intended to operate **R, R100, R200, R300,B** and **C.**

2.3.5. At junctions of the metal core of the A-class division, except for A-0 class divisions, with metal decks, sides and hull framing, as well as at penetrations of pipes, cables and ventilation ducts through the metal core of the A-class division, in order to reduce heat transfer, provision shall be made for insulating the nearby structures with non-combustible materials on one or both sides from the A-class division over a length not less than 500 mm. The above-indicated length of insulation may be reduced if the standard fire tests will prove the possibility of smaller insulation length.

2.3.6. Insulation shall be installed on both sides of the core, in case of A or B – class bulkheads having core of aluminium alloy or other material which fails in fire or is a combustible material, if they are load-bearing sides and/or ensure floodability of the craft, including enclosures of the buoyancy boxes. A-class decks having core of aluminium alloy or other material which fails in fire or is a combustible material shall be insulated on the underside.

2.3.7. If an A – class division divides two adjacent spaces one of which is entirely empty of combustible medium or this division is the external surface of the hull, superstructures or deckhouses, such a division may be a A-0 class division, provided it is continuous.

2.3.8. Continuous B-class ceilings and linings with the relevant decks and bulkheads shall fully or partially comply with the requirements for insulation and fire integrity of divisions, as required by the respective fi re integrity tables.

2.3.9. From deck to deck all B-class bulkheads shall be extended and to external plating or to other boundary surfaces. However, if the installation of the continuous B-class ceilings and/or linings is done on both sides of the bulkhead, the bulkheads may terminate in such continuous ceiling or lining.

2.3.10. With the exception of baggage rooms and refrigerated stores of service spaces, the insulation materials shall be non-combustible.

Vapor barriers and adhesives, as well as insulation of cooling pipes and their fittings may be combustible, but as far as practicable, they shall be kept to a minimum while their exposed surfaces shall be low-flame spread.

2.3.11. The insulation shall be impermeable to oil and its vapors in spaces where oily products are or may be present.

2.3.12. If the hull, superstructures and deckhouses are constructed of aluminium alloys or non-combustible materials, the following requirements shall be complied with:

.1. “A” or “B”- class divisions made of above-mentioned materials shall be insulated so, that the temperature of the structural core of their specimens does not rise more than 200 °C above the initial temperature at any time during the applicable fi re exposure at the standard fire test.

The duration of the standard fi re test of “A”- class divisions may be reduced to 30 min;

.2. appropriate measures shall be taken to ensure that the components of columns, stanchions and other structural members made of the above-mentioned materials, which are required to support lifeboat and liferaft stowage, launching and embarkation areas, comply with the temperature rise limitation requirement:

Structural core of the “A”-class divisions – at the end of an hour;

Structural members required to support the “B”-class divisions – at the end of half an hour;

.3. Uses of combustible materials for manufacture of structural members, grounds, bulkhead linings, furniture, etc. in the hull, superstructures and deckhouses made of aluminium alloys or non-metal materials shall be restricted. The noncombustible materials shall be used construct the ceilings of corridors and spaces.

2.3.13. The amount of combustible materials used for construction of interior bulkheads, grounds, linings, finishes, furniture and other equipment of control stations, accommodation and domestic service spaces (except for saunas and spaces mentioned in 2.3.10), where the use of such materials is not prohibited by the present Part, shall not be in excess of 45 kg per 1 m^2 of the deck area of each space.

The Register may revise the above limiting amount of such materials depending on the type and purpose of the craft.

2.3.14. Stairways and vertical ladders shall be securely fixed and shall be manufactured of steel or another material equal to steel in fire integrity, including steps.

In craft having two or more decks or spacious superstructures, interior stairways shall be surrounded by at least fire-retarding divisions with self-closing doors of a class not inferior than “B-0” class.

2.3.15. If applied within accommodation and service spaces and control stations, primary deck coverings shall be of approved material which is neither non-flammable nor will give rise to toxic or explosive hazard at elevated temperatures, this being determined in accordance with the Fire Test Procedures Code.

2.3.16. Paints, varnishes and other finishes that are used on exposed surfaces inside spaces shall not generate excessive quantity of smoke and toxic vapors, determination of this being done in accordance with the Fire Test Procedures Code.

2.3.17. In accommodation and service spaces, it is permitted for fitting of non-combustible bulkheads, linings and ceilings with a combustible covering at most 2 mm thick, except corridors, stairway enclosures as well as control stations where thickness of combustible covering shall not exceed 1.5 mm.

2.3.18. All waste receptacles shall be constructed of noncombustible materials with no openings in sides and bottom.

2.4. Protection of Cooking and Heating Appliances

2.4.1. Materials near cooking or heating appliances.

2.4.1.1. Materials and finishes used in the vicinity of open-flame cooking and heating devices within the ranges defined in Fig. 7.2.1 shall comply with the following requirements, while taking into account the movement of the burner up to 20° for monohull and sailing craft and 10 ° for multihull and motor craft, where gimbaled stoves are fitted:

a) Free-hanging curtains or other fabrics shall not be fitted in Zone 1 and Zone 2;
b) Exposed materials installed in Zone 1 and Zone 2 shall be of glass, ceramics, aluminium, ferrous metals, or other materials with similar fi reproof characteristics;
c) Materials installed in Zone 2 shall be thermally insulated from the supporting substrate to prevent combustion of the substrate, if the surface temperature exceeds 80 °C.

The thermal insulation may be achieved by an air gap or the use of suitable material.

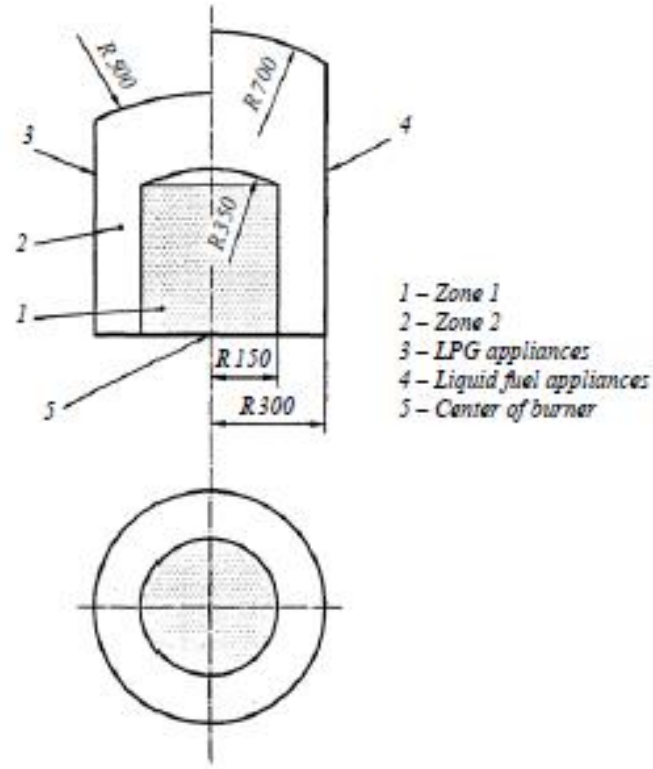

Figure 7.2.1: Areas of special material requirements

2.4.2. General safety provisions.

2.4.2.1. Fuses shall be shielded, wherever they are installed, in order to avoid overheating or damage to adjacent material or to the structure of the craft.

2.4.2.2. For cooking and heating units using fuel which is liquid at atmospheric pressure, the following shall apply:

a) stoves and heating units shall be securely fastened;
b) open-flame burners shall be fitted with drip-pan;
c) Where open-flame-type water heaters are installed, adequate ventilation and flue protection shall be provided;
d) appliances using petrol shall not be installed;

e) Fuel tanks which are not an integral part of the cooking or heating appliance, as well as fuel supplying pipes shall comply with the requirements of Chapter 5 Section 4, [4.10.2];

f) fuel tanks which are not an integral part of the cooking or heating appliance shall be installed outside Zone 2, Fig 2.7.1;

g) Installation of a readily accessible shut-off valve shall be done on the fuel tank. If this is outside the galley, a second valve shall be fitted in the fuel line in the galley space, outside Zone 2, Fig. 2.7.1, in a easily accessible position. This requirement may not applicable where the tank is located lower than the cooker/heater and there is no possibility of back siphoning. Any valve installed on a tank which is located inside a machinery space shall be remote controlled from a position outside the machinery space;

h) Visible identification of filler openings for tanks shall be done in order to indicate the type of fuel to be used in the system.

2.5. Protection of Machinery Spaces and Fuel Tanks

2.5.1. In order to prevent the build-up of explosive gases, the machinery and fuel spaces shall be properly ventilated.

2.5.2. Material used for the insulation of machinery spaces shall:

.1. Be non-combustible and shall present a surface which does not absorb oily products and their vapors;

.2. Have an oxygen index (OI) of at least 21 in accordance with ISO 4589-3:1996 at an ambient temperature of 60 °C.

2.5.3. Electrical equipment installed in spaces containing:

Petrol engines and/or petrol tanks;

Petrol lines and/or their fittings;

Liquefied gas cylinders and/or gas lines;

Portable petrol tanks and/or outboard engines with integral petrol tank shall be designed so as to prevent ignition of the surrounding combustible gases.

2.5.4. Installation of the fuel systems and the installed fuel tanks shall comply with the requirements of Chapter 5.

2.5.5. Fuel tanks

Protection and separation of fuel tanks, pipelines and their fittings shall be done or protected from any high temperature source.

All the tanks shall be provided with a ventilation system.

The petrol shall be stored in independent tanks which are:

.1. Isolated from the machinery space and other sources of ignition;
.2. Separated from the accommodation spaces.

Diesel fuel shall be stored in independent tanks.

2.5.6. Fuel with a flash point below 55 ° C (petrol and diesel fuel).

2.5.6.1. Arrangement of fuel tanks, their materials and equipment shall comply with the requirements of Chapter 5 Section 4, [4.10.2].

2.5.6.2. Carbon dioxide smothering system or aerosol fire extinguishing system shall be provided to the enclosed compartment in which fuel tanks are located.

2.6. Saunas

2.6.1. Insulation of sauna shall be done against other spaces by “A-60” class divisions except those spaces inside the perimeter. The perimeter of the sauna may include changing rooms, shower/bathrooms and toilets.

2.6.2. Showers or bathrooms with direct access to saunas may be considered as part of them. In such cases, the door between sauna and the shower/bathroom need not comply with fi re safety requirements.

2.6.3. In the sauna, the traditional wooden lining on the bulkheads and ceiling are permitted. Above the oven, the ceiling shall be lined with a non-combustible plate with an air gap of at least 30 mm. The distance from the heating surfaces to combustible materials shall be at least 500 mm or the combustible materials shall be protected (e.g. noncombustible plate with an air gap of at least 30 mm).

2.6.4. It is permitted to use the traditional wooden benches in the sauna.

2.6.5. The sauna door shall have no locks and open outwards by pushing.

2.6.6. A timer shall be provided to electrically heated ovens shall and shall meet the requirements of INTLREG Rules Part 6, while cables and wires shall meet the requirements of 16.8 of the same Part.

2.7. Local Furnace Heating (Furnaces/Fire Places)

2.7.1. On non-self-propelled and berth-connected craft, the use of local solid fuel-fired furnace heating is allowed, except for spaces containing fuel oil tanks and/or compressed and liquefied gas cylinders or the fuel oil- and/or liquefied gas-fired equipment.

2.7.2. The brick furnaces/fire places shall meet the following requirements:

a) Thickness of the outer brick walls of the combustion chambers shall be not less than 250 mm;
b) Thickness of the outer brick walls of the flues shall be not less than 120 mm;
c) Thickness of the brickwork of the crown shall be not less than 250 mm;
d) The furnace bottom shall be separated from the combustible deck plating by a brickwork of not less than 250 mm thick;
e) Combustion chamber shall be separated from a combustible deck plating by a brickwork of not less than 350 mm thick;
f) The brick wall shall have a local thickening of 500 mm at penetrations of the flues through the craft structures;
g) Brick furnaces shall have metal encasements

2.7.3. Installation of the metal heating furnaces without brick lining or water jacket shall not be done in the craft's spaces.

2.7.4. At a distance of not less than 500 mm from constructions of combustible material, heating furnaces shall be placed. The distance shall be at least 250 mm where such constructions have heat insulation of noncombustible material.

In case, where parts of construction abutting on the furnaces are entirely made of non-combustible materials, the minimum distance is not regulated.

2.7.5. The distance from the furnace door to a bulkhead of combustible material shall be at least 1.25 m. Where the bulkhead is made of a non-combustible material or is insulated on surface with steel sheets of 5 mm thick, the distance may be reduced to 1 m.

2.7.6. The distance from the open combustion chamber of the fi replace to a bulkhead of combustible material shall be not less than 2.5 m. Where the bulkhead is made of a noncombustible material or is insulated on surface with steel sheets of 5 mm thick, the distance may be reduced to 2 m.

2.7.7. In front of furnace door and ash hole and the open combustion chamber of the fi replace, provision shall be made for steel plates placed on the floor or for a surface of non-combustible material extending for at least 500 mm from the front wall of the furnace/fi replace.

2.7.8. The furnaces/fi replaces shall be arranged so that, even in case of their overheating, no combustion danger arises for any equipment and outfit. They shall not be installed close to hold bulkheads.

2.7.9. Arrangement of the chimneys of the furnaces/fi replaces shall be done so that they rise by 0.5 m above the highest superstructure. The insulation of the penetrations of the chimneys through the bulkheads and decks shall be done in such a way that the temperature in the point of their contact does not exceed 60 °C.

The distance from the chimney or flue to combustible construction shall be at least 350 mm.

Chimneys shall be made of steel with casings forming a ventilation space or they shall be insulated by a heat insulating material.

The chimneys shall be securely fixed and fitted with spark traps.

SECTION 3 FIRE-EXTINGUISHING EQUIPMENT AND OUTFIT

Contents

3.1. General

3.1.1. In order to equip the craft with the fire-fighting equipment, provisions shall be made, according to the craft size and installed engines, and to the presence of open-flame heating devices.

3.2. Classification of Fires According to ISO 3941:1977

3.2.1. Class A: fires involving solid materials, usually of organic nature, in which combustion normally takes place with the formation of glowing embers.

Class B: fires involving liquids or liquefiable solids.

Class C: fires involving gases.

Class D: fires involving metals.

3.3. Arrangement of Equipment

3.3.1. The craft spaces shall be equipped with either:

Portable fire extinguishers in accordance with the requirements of Section 4, or

Fixed fire extinguishing systems in accordance with the requirements of Section 5 plus portable fire extinguishers in accordance with the requirements of Section 4

3.4. Equipment of Galley Space

3.4.1. The galley shall be provided by one or more portable fire extinguishers and a fire blanket in accordance with the requirements of Section 4, or by a water mist system.

3.5. Equipment of Machinery Space

3.5.1. Protection of machinery space and fuel tanks.

In according to the requirements of Table 7.3.1, the protection of machinery space and fuel tanks shall be achieved.

3.5.2. Extinguishing medium and capacity.

The fire extinguisher shall be suitable for extinguishing a machinery room fire.

Table 7.3.1: Protection of machinery spaces and fuel tank

Type	Type of craft and position of engine	Type and rating of engine	Protection achieved by
Craft without machinery space	Open craft with inboard engine(s) or part thereof above cockpit sole and nearly vertical casing	Petrol engine of less than 120 KW rating	Fixed fire-fighting system complying with the requirements of Section 5 or portable fire extinguisher sized and suited to flood the machinery space through a fire port in the engine casing
		Diesel engine	
	Open craft with transom-mounted petrol outboard motor(s) and portable fuel tank stowage in the open atmosphere		According to provisions given in 4.3.7. No special requirements for a single outboard engine < 25 kW.
	Open craft with transom-mounted petrol outboard motor(s), and more than one portable fuel tank per engine , stowed in open atmosphere		Fixed fire-fighting system to protect fuel space complying with the requirements of Section 5, or portable fi re extinguisher sized and suited to flood the fuel space or to cover totally the tank space.
All craft	Petrol tanks are installed in enclosed space		
Craft with machinery space	Engine below cockpit level or inside craft	Petrol engine	Fixed fire-fighting system complying with the requirements of Section 5.
		Diesel engine/engines of less than or equal to 120 KW combined rating.	Fixed fi re-fighting system complying with the requirements of Section 5, or portable fi re extinguisher of a type and size suitable to flood the machinery space through a fire port in the engine casing.
		Diesel engine/engines of more than 120 kW combined rating	Fixed fire-fighting system complying with the requirements of Section 5.

The extinguishing capacity of the portable extinguisher shall be sufficient for the volume of the engine room.

In order to discharge the extinguishing medium into the machinery space without opening the primary entrance or access hatch, a discharge opening shall be provided.

3.5.3. Fire port

The fire port shall be: Identified; Sized to accept the discharge nozzle of the appropriate

Fire extinguisher; Open or openable to provide ready access for discharge of the medium into the machinery space; Located so that the required size of extinguisher can be operated in a position that will allow complete discharge of the extinguishing medium

3.6. Other Enclosed Spaces

3.6.1. Other enclosed spaces shall be adapted to supply of extinguishing medium, except where they are designed for the storage of fuel or other flammable goods when they shall be protected as specified in 3.5.1 for spaces containing main and auxiliary engines with a total combined capacity of less than or equal to 120 kW.

3.7. Open Deck

3.7.1. The protection of the open deck area on craft of 15 m and less in length as well as on all craft without power plant may be achieved by fire buckets.

3.7.2. The protection of the open deck area on craft of more than 15 m in length shall be achieved by a water hose system complying with the requirements of Section 6 and by fire buckets.

3.7.3. The type, number and stowage of buckets mentioned in 3.7.1 and 3.7.2 shall be taken according to Sec 10, [10.1.1.4.]

SECTION 4 PORTABLE FIRE EXTINGUISHERS

Contents

4.1. Application

4.1.1. This Section specifies the requirements for type, size, number, location and storage of portable fire extinguishers on board. This Section is not intended to regulate the technical requirements for the extinguishers themselves, which are subject to national regulations.

4.2. General

4.2.1. Any portable fire extinguisher shall be readily accessible and available for use.

4.2.2. If the portable fire extinguisher is located where it is exposed to splashed or sprayed water, the extinguisher nozzle and triggering device shall be shielded, unless the extinguisher is certified or listed for marine service.

4.2.3. The extinguisher may be stowed in a special locker or other protected or enclosed space. The locker or the opening part of the enclosed-space door shall carry the appropriate symbol that is indicating that the locker contains a fire extinguisher.

4.2.4. Where energized electrical equipment is located (e.g. electric motor space, battery space, switchboard), portable carbon dioxide extinguishers may only be located in a space.

4.3. Type, Capacity and Number of Portable Fire Extinguisher

4.3.1. Protection of the craft shall be done by portable fire extinguishers of type approved by the Register in the manner described in 4.3.2 to 4.3.8.

4.3.2. According to the requirements of 4.3.6 to 4.3.8, the number of portable fire extinguishers shall be determined.

4.3.3. The craft shall carry Class A and B –rated portable fire extinguishers rated not less than 5A/34B.

4.3.4. An individual carbon dioxide extinguisher shall have a maximum capacity of 2 kg. There shall be only one carbon dioxide extinguisher in each hazardous area (space).

4.3.5. Where the installation of carbon dioxide extinguishers are done, except for open areas, a notice warning of precautions is to be taken in using the extinguisher shall be affixed in the immediate vicinity of such an extinguisher or to the extinguisher itself in accordance with Section – 8, 8.4.

4.3.6. Craft fitted with open-flame device shall carry either:

a) One or more portable fire extinguisher(s) with a minimum combined capacity of 8A/68B; or

b) One fire blanket of a size sufficient to protect the galley cooker and a portable fi re extinguisher with a minimum capacity of 5A/34B

4.3.7. Craft with an outboard motor of more than 25 Kw shall carry one or more portable fire extinguisher(s) with a minimum combined capacity 8A/68B.

4.3.8. Portable fire extinguisher shall be provided to the craft with regard to the requirements for the location thereof:

a) Within 1 m from the main helm position for craft with length less than 10.0 m, one portable extinguisher with a minimum capacity of 5A/34B shall be located;
b) Within 2 m from the main helm position for craft with length of 10.0 m and more, one portable extinguisher with a minimum capacity of 5A/34B shall be located;
c) Within 2 m from any open-flame device, one portable extinguisher with minimum capacity of 8A/68B shall be located and shall so situated that it is accessible in the event of fire. For the galley cookers, two extinguishers or one extinguisher and fire blanket according to 4.3.6 so located that they are accessible in the event of fire;
d) One portable extinguisher with minimum capacity of 4A/34B or 8A/68B depending on the power output of installed internal combustion engines, with regard to 4.3.7, shall be located outside the machinery space but not more than 2.0 m from the fire port mentioned in 3.5.3;
e) Within 5 m from any manned location for craft with length less than 10.0 m, one portable extinguisher with minimum capacity of 4A/34B shall be located;
f) One portable extinguisher with minimum capacity of 4A/34B shall be located within (LH/3) from any manned location, measured in the horizontal projection, for craft with length of 10.0 m and more;
g) One portable extinguisher with minimum capacity of 5A/34B shall be positioned within each 20.0 m^2 of the protected space area for craft with length of 10.0 m and more. If the protection of a protected section (area or group of cabins not separated into areas) of the craft is done by an automatic system, only one portable fire extinguisher with minimum capacity of 5A/34B shall be carried in that section.

SECTION 5 FIRE EXTINGUISHING SYSTEMS

Contents

In this Section, the requirements for fire extinguishing systems, manually or automatically put into operation, capable of extinguishing Class A and B fires shall be specified.

5.1. General

5.1.1. Manual systems

Activation of a fixed fire extinguishing system put into operation manually shall be done from the wheel house. A means of additional local activation shall be provided near that space, if that position is more than 5 m away from the space that is to be protected.

5.1.2. Automatic systems.

A fixed system that is automatically activated shall be in compliance with the requirements of 5.2.

5.1.3. Manual/automatic combined systems.

A combined manual/automatic system shall be arranged in such a way that the operator can manually override the automatic mode. The system shall be in compliance with the requirements of 5.2.

5.1.4. Gas fire extinguishing systems.

The equipment of a fixed gas fire extinguishing system shall be placed in a separate enclosed space and shall be done in such a manner that no parts of the system are situated and pass through crew's quarters.

Enclosed space in which such system is located, may have open, closeable and sealed openings for the following purposes:

Penetration of cables and pipelines;

Access for maintenance of the system equipment

5.2. Installation

5.2.1. General.

Fastening of the components of a fixed system shall be securely done to the craft hull to withstand motions, shocks and vibrations during normal running conditions specified by the craft design.

5.2.2. Manual release control systems.

The release control shall be visible or its location clearly labeled and the protected space identified.

5.2.3. Pipes of fire extinguishing systems

5.2.3.1. Steel, copper, copper-nickel alloys as well as of bimetals, one of the layers in which comprises the mentioned material shall be used to manufacture the pipelines and fittings of the fire extinguishing systems and their fastening parts.

5.2.3.2. If non-metal materials are used for manufacture of any system components mentioned in 5.2.3.1, their fire integrity shall not be inferior to that of steel.

5.2.3.3. Brazing used for joining the pipes in the system shall have the melting temperature of the solder of not less than 600 °C.

5.2.3.4. Effective extinguishing of fires within the protected space shall be ensured by the number and location of discharge nozzles.

5.2.4. Discharge and control

A visual indication of the discharge of extinguishing medium shall be provided.

5.2.4.1. A warning audible alarm shall sound prior to the extinguishing medium being discharged.

5.2.4.2. If installation of more than one fire extinguishing system is done in a hazardous space, then each system shall be capable of individually protecting the space, unless they are simultaneously discharged.

5.3. Carbon dioxide smothering system

5.3.1. The supply of 85 per cent of the rated amount of carbon dioxide shall be ensured as follows:

.1. Within not more than 2 min for machinery spaces and other spaces where fuel oil is used or other flammable liquids are carried;

.2. Within not more than10 min for spaces where no fuel oil or other flammable liquids are carried or used.

5.3.2. Storing of carbon dioxide shall be done in cylinders and tanks of an approved type.

5.3.3. Determination of the number of cylinders for storing liquid carbon dioxide shall be done depending on the filling ratio (amount of carbon dioxide per 1 liter of cylinder capacity).

5.3.4. The requirements of 5.1.4, 5.2.1 and 5.2.2,as well as 5.3.4.1 to 5.3.4.8 shall be met by the equipment of carbon dioxide smothering station.

5.3.4.1. Arrangement of the carbon dioxide smothering stations other than those for machinery spaces shall be done in spaces that are located on open decks or directly below them and having an access from the open deck. The carbon dioxide smothering stations for machinery spaces may not have a direct exit to the open deck only in case where provision is made for remote release of the fire extinguishing medium from the wheel house or other spaces having a direct exit to the open deck.

5.3.4.2. Vertically, cylinders shall be placed in rows on pads which may be made of wood.

5.3.4.3. In order to weigh the cylinders or measure the level of the liquid, the carbon dioxide smothering station shall have such arrangements.

5.3.4.4. Marking of each cylinder shall be done with an ordinal number.

5.3.4.5. Marking of the doors of the stations shall be done properly, open outwards and shall be kept permanently locked. The lock shall have two keys, one of which shall be kept in a closed case with a glazed wall that is located near the lock and the other– in the wheel house.

5.3.4.6. Displaying of a schematic plan of the smothering system that is showing the controls and spaces protected, as well as instructions for starting and operating the system shall be done in a conspicuous position within the station.

5.3.4.7. The station shall have natural and electric lighting supplied from the craft's mains and from an emergency source.

5.3.4.8. An independent exhaust and supply ventilation shall be provided to the carbon dioxide smothering stations.

In the lower part of the station, the inlets of exhaust ducts shall be located.

5.3.5. Valves of cylinders shall meet the following requirements:

a) They shall have protective devices. Protective diaphragms shall break at a pressure rise in the cylinder up to (1.3 ± 0.1) P, MPa, where P = design pressure in the cylinder. The breaking pressure of the slotted diaphragms shall be at least 1 MPa more than the highest value of the protective diaphragm breaking pressure for valves with slotted diaphragms, which are fitted in addition to protective diaphragms. There shall be provided a checking device in order to indicate that the protective device has activated;

b) The valve-opening device shall be of a lever type and shall ensure full opening of the valve by turning the lever to an angle not more than 900. The device shall permit the valves to be opened individually or by groups;

c) The cylinder valves shall be fitted with scarfed pipes cut short at 5 to 15 mm from the cylinder bottom. The inside diameter of the pipes and pipes connecting cylinder valves with the manifold shall not be less than 10 mm.

5.3.6. From the protective devices of cylinder valves, gas shall be discharged to the atmosphere beyond the boundaries of the station through a separate pipe shall be provided with an audible alarm at the outlet.

5.3.7. The pipe that is connecting the cylinder with the manifold shall be seamless and made of red copper. The use of special flexible hoses manufactured of approved materials is permitted.

Fitting of a non-return valve shall be done on the pipe. Installation of the valve at the manifold inlet shall be done in such a way so as to prevent accumulation of water above it. A drainage arrangement of the manifolds shall provide their complete draining.

5.3.8. Fitting of the distributing manifold of the carbon dioxide smothering station shall be done with a pressure gauge graduated to a value at least 1 MPa in excess of the hydraulic test pressure of the carbon dioxide cylinders. The value of the pressure gauge scale division shall not exceed 0.5 MPa.

5.3.9. At low temperatures down to -30 °C, sealing materials for valves and flexible hoses shall remain usable.

5.3.10. The total cross-sectional area of collecting manifolds and cross-sectional area of the distributing manifold shall be not more than the sum of cross-sections of the simultaneously opening cylinder valves for the largest (by volume) protected space.

5.3.11. For individual protected spaces, the cross-sectional area of distributing pipes shall be not more than the total cross-sectional area of the simultaneously opening cylinder valves for the space concerned.

5.3.12. Fitting of each pipe to individual protected space shall be done with individual shut-off devices. In accordance with the requirements of Chapter 5 Section 4,[4.2.5.3]", determination of wall thickness of the pipes shall be done.

5.3.13. In the protected space, the total sectional area of the outlets of the nozzles shall not exceed 85 percent of the total cross-section of the distributing piping.

5.3.14. Instead of nozzles in silencers, exhaust-gas boilers and smoke stacks, perforated pipes may be used. The total area of pipe perforations shall be by 10 per cent less than the pipe cross-section.

5.3.15. Release controls of the system at the fire extinction station shall ensure simultaneous opening of cylinder valves.

5.3.16. In accordance with 5.2.5.3, fixed carbon dioxide smothering systems shall be provided with alarm to warn of gas release.

5.3.17. Closing of all openings through which air can enter and/or the fire smothering gas can escape shall be provided in the spaces that are protected by the carbon dioxide smothering system. Arrangement of controls for closing the openings shall be done outside the protected spaces or at places not likely be cut off by the fire in the protected space.

5.3.18. A notice of an established standard bearing the description of the alarm signal and actions to be taken when the alarm sounds shall be displayed at each entrance to and exit from the space to which carbon dioxide can be released.

5.3.19. In sound cases, for certain protected spaces local stations may be allowed. Inside the machinery spaces, carbon dioxide cylinders for protecting silencers of internal combustion engines, smoke stacks and other enclosed spaces may be installed.

5.4. Aerosol fire extinguishing system

5.4.1. General

5.4.1.1. The fire extinguishing aerosol generators that are used in the aerosol fire extinguishing system shall be of a type approved by the Register.

5.4.1.2. The aerosol fire extinguishing system shall include:

Generators of fire extinguishing aerosol;

Remote control device;

Pre-discharge alarms;

Cables

5.4.1.3. The following measures shall be taken at system activation:

In accordance with the requirements of 5.2.4.1, automatic activation of the emergency alarm systems in the protected space;

Automatic disconnection of ventilation in the protected space

5.4.1.4. The generator's operating mode shall not exceed 2 min, for machinery and other spaces where fuel oil or flammable liquids are used.

5.4.1.5. Arrangement of generators in the protected space shall ensure even distribution of fire extinguishing aerosol. The fire extinguishing aerosol shall be fed directly to the stagnant zones if there are stagnant zones formed by the equipment and boundaries.

5.4.1.6. When installation of generators are done, they shall be oriented so that the jets of fire extinguishing aerosol do not exert thermal effect on escape routes, craft's equipment, cables, emergency lighting, warning alarm system, fuel oil and lubricating oil tanks and pipes.

5.4.2. Fire extinguishing aerosol generators.

5.4.2.1. The fire extinguishing aerosol generator shall comprise of a casing, which contains an aerosol generating agent, starting device, electrical connector, devices for securing to the craft's structures. Fitting of the casing of the generator shall be done with an arrangement (nozzle) for the release of the aerosol.

5.4.2.2. Information about the distance (along the aerosol jet axis) from the exit of the jet out of the generator to the boundary of thermal zone with a temperature of + 70 °C shall be provided to generator of each type.

5.4.2.3. Time from the start-up of the generator until its operating duty shall not exceed 10 s.

The duration of the operation duty shall not be less than 20 s.

5.4.2.4. The casing of the generator, its foundation and details for securing it to the foundation shall be constructed of non-combustible materials.

5.4.2.5. If the ambient temperature exceeds 250 °C, the generators shall be fitted with an arrangement for automatic (spontaneous) starting.

5.4.3. The aerosol fire extinguishing remote control device

5.4.3.1. The remote control device shall comply with the requirements of INTLREG Rules of Part 6.

5.4.3.2. The remote control device shall enable simultaneous distant starting of all generators in the protected space.

5.4.3.3. The remote control device shall enable individual start-up of the generators in each space, if several spaces are protected by the fire extinguishing system.

5.4.3.4. For the remote control device, there shall be two sources of power supply – main and auxiliary.

5.4.3.5. Automatic monitoring of the running order of starting circuits (e.g. disconnection, contact-to-frame fault, etc.) and signaling of the fault on the front panel shall be ensured by the remote control device.

The remote control device shall ensure automatic monitoring of the running order of starting circuits (e.g. disconnection, contact-to-frame fault, etc.) and signaling of the fault on the front panel.

5.4.4. Local stations of the aerosol fire extinguishing.

5.4.4.1. In sound cases, fitting of local stations with one or two generators and the starting arrangement located near entrance to the space (without remote control device) may be done.

5.4.5. Cabling

5.4.5.1. Cabling shall comply with the requirements of INTLREG Rules Part 6.

5.4.5.2. Shielding of starting cables shall be done and the shield shall be grounded.

5.5. Water fire main system

5.5.1. General

5.5.1.1. For firefighting purpose, along with special fire pumps, sanitary, bilge and other pumps may be used, the capacity and head of which shall be not less than the design values for fire pumps.

5.5.1.2. A fixed water fire main system with a power-driven fire pump shall be provided to self-propelled craft having power output 120 kW and over, and non-self-propelled craft provided with their own fixed sources of power output of 120 kW and over. Location of such a pump, along with its piping and water intake may be done in machinery space.

5.5.1.3. On agreement with the Register, the installation of the fixed water main system may not be done on craft with a crew consisting maximum of 3 members and/or with hull length of 15 m and less.

5.5.1.4. Craft that are not mentioned in 5.5.1.2 and 5.5.1.3 shall be provided with appropriate fixed manually operated pumps or motor pumps which together with their piping and water intakes shall be located outside the machinery space.

5.5.1.5. For berth-connected craft permanently moored to shore, as an alternative means of fire extinguishing, delivery of the water to the water fire main system may be done by the shore based system with a capacity and head not less than the design values for the fire pumps. In this case, systems shall be connected with due regard for the craft displacements.

5.5.1.6. The capacity of a fire pump of a fixed water fire main system shall be sufficient in order to ensure simultaneous operation of two fire nozzles with the largest nozzle size that is adopted for the craft concerned at a pressure at the farthest hydrant being 0.2 MPa.

Designing of the other water fire main systems shall be done so as to be capable of delivering at least one jet of water to any part of the craft, at a pressure at the farthest hydrant being 2 MPa.

5.5.1.7. If the installation of other fire extinguishing systems using water supplied by fire pumps are done on board the craft (pressure water-spraying system, drenching system, etc.), the capacity of the pump of the water fire main system shall be sufficient for delivery of water to any part of the craft and for parallel operation of one of the above systems that requires the largest quantity of water.

5.5.1.8. Where a power-driven pump is used, fitting of the fire main shall be done with at least one fire hydrant which shall be placed on the deck, and with one fire hydrant that is fitted on the discharge line in the vicinity of the fire pump(between the pump and shut-off valve).

5.5.1.9. If the manual pumps and power pumps are connected to a common fire main, they shall be provided with a non-return shut-off valve that is fitted on discharge side.

5.5.2. Requirements for fire pumps.

5.5.2.1. Fire pumps shall have an independent mechanical drive.

The use of main-engine-driven pumps may be allowed by the Register, provided that the propulsion plant is designed in order to provide the fire pump operation when the craft is not underway and disconnection of the pump when the ship is under way.

On agreement with the Register, a V-belt drive from the main engine to the pump may be used, provided that transmission of torque is ensured even when one of the belts is broken.

5.5.2.2. Other purposes requiring only short-time consumption of water (e.g. flushing out of decks, hawse pipes, etc.), the fire pump might be used.

For other services (bilge pumping, emergency drainage of motor compartment), the Register may allow the use of the fire pump, provided that the simultaneous operation of them is confirmed and the requirements of these Rules for the services are met.

5.5.2.3. Pumps and pipes that are intended for firefighting purposes may neither be used for pumping of petroleum products, oil or other flammable liquids nor as ballast pumps for tanks used for alternate carriage of fuel oil and ballast water.

5.5.2.4. In order to discharge water from the delivery to the suction pipe, bypass valves shall be provided to the pumps that are likely to develop in the fire line a pressure exceeding the permissible value.

Fitting of the fire pump shall be done with a pressure gauge that is installed on the delivery pipe ahead of the bypass valves.

In order to operate at a pressure exceeding the working pressure in the fire line by no more than 10 per cent, the by-pass valves shall be set.

5.5.2.5. Below the light-draught waterline, the fixed fire pump and its sea valve shall be located.

On agreement with the Register, the pump may be installed above the waterline, provided that the efficient self-priming means are available.

5.5.3. Piping

5.5.3.1. The diameters of the water fire main and water service pipes shall be such that the water velocity at any pipe sections is not more than 4 m/s.

5.5.3.2. Where heating of the craft’s spaces is provided, the water fire main sections passing through unheated spaces and spaces located on open deck shall be provided with shut-off fittings for their isolation from the pipes running through heated spaces as well as with water drainage arrangements.

5.5.3.3. Fitting of each fire pump shall be done with shut-off valves on suction and discharge pipes. It is allowed for the use of slide valves on suction pipes.

On discharge pipes of centrifugal pumps, non-return shut-off valves shall be provided.

5.5.3.4. Pipes of the water fire main system shall be made of steel seamless pipes.

5.5.3.5. On agreement with the Register, fittings shall be of steel, bronze, copper or, of other materials.

5.5.4. Fire hydrants**.**

5.5.4.1. Each fire hydrant shall be fitted with shut-off valve and a standard quick-acting coupling. Hydrants fitted on open decks shall also have quick-acting plugs.

5.5.4.2. Arrangement of the fire hydrants shall be so done on board the craft so as to ensure delivery of at least one water jet to any part of the craft through standard fire hoses not more than10 m long.

5.5.4.3. Fire hydrants shall be placed:

On open decks – in way of exits;

Inside the spaces – in corridors and lobbies, engine and boiler rooms

At a distance of not more than 1.35 m from decks or floorings, Fire hydrants shall be placed.

5.5.4.4. All fire hydrants shall be painted red and numbered.

5.5.5. Fire hoses and nozzles.

5.5.5.1. As approved by the competent bodies, fire hoses shall be used on board craft.

5.5.5.2. Fire hoses shall meet the following requirements:

.1. They shall have a length equal, approximately, to 2/3 of the craft length, but not more than 15 m;

.2. They shall be made of approved materials resistant to wear and destruction by microorganisms (rotting);

.3. The diameters of the hoses and couplings shall be compatible with the diameters of standard fire nozzles coupled thereto, as well as with the diameters of the craft's fire hydrants.

5.5.5.3. The number of the fire hoses shall be equal to that of fire hydrants that are installed on board.

5.5.5.4. Each fire hose in assembly with a fire nozzle shall be stowed on reels or in baskets in the immediate vicinity of the fire hydrant for which it is intended. Fire hoses shall be kept in properly marked ventilated lockers on open decks.

5.5.5.5. Fire nozzles shall be of dual-purpose type, thus capable of producing both a solid jet and a sprayed jet.

5.5.5.6. The standard nozzle size shall be equal to at least 6 mm.

5.5.6. Tests for strength and tightness.

Testing of the water fire main system shall be done for strength in a workshop and for tightness after installation on board in compliance with the requirements of Table 7.5.1.

Table 7.5.1

Pipes and fittings	**Test hydraulic pressure, MPa**	
	In workshop	**On board craft**
Pipes from pumps to fire hydrants	–	0.2
Fittings	1.5 p[1]	In action in assembly with the system
Pipes and fittings	1.5 p but not less than 0.2 MPa	
p = working pressure in the system; 1 in case the test is intended to be conducted with that pressure after installation on board, the test in workshop may be omitted.		

SECTION 6 OPERATION

6.1. The fixed system shall be capable of operating at environmental temperatures corresponding to the operating conditions specified by the design.

6.2. Each system shall be provided with operating instructions. If the extinguishing medium is an asphyxiant, these shall include directions on the necessity and how to ventilate the space prior to entering for damage assessment and subsequent restarting of the engine, as well as on how to help people who accidentally sustained asphyxiation in fire extinguishing.

SECTION 7 DESIGN AMOUNT OF EXTINGUISHING MEDIUM

Contents

7.1. General

7.1.1. The design amount of the extinguishing medium shall be based on the net volume of the space with the deduction of the volumes occupied by the equipment. Furniture and equipment into which the extinguishing medium can penetrate are not included in the deducted items.

7.1.2. If the design volume of the space is 10.0 m^3 and less the design amount of the extinguishing medium shall be increased by 10 per cent. No reduction is required when the volume of the space exceeds 20.0 m^3. Determination of the intermediate values is done by linear interpolation.

7.2. Design amount of carbon dioxide of a fixed fire smothering system

7.2.1. The following formula shall determine the amount of carbon dioxide, in kg:

$$G = 1.79V\varphi$$

Where V = design volume of protected space, m^3;

φ = factor equal to:

0.3 – for machinery spaces, the design volume of which is determined with regard to the full volume of casings;

0.35 – for machinery spaces, the design volume of which is determined without any regard to the volume of casing from the level at which the horizontal area of the casings is equal to, or less than, 40 % of the horizontal cross-sectional area of the machinery space

For machinery spaces, such value of the factor φ shall be taken which results in a greater value of G.

7.3. Design amount of aerosol generating agent of aerosol fire extinguishing system

7.3.1. The following formula shall determine the design mass of the aerosol generating agent, in kg:

$$G = \left(V + \sum_{J=1}^{n} V_{arj} \cdot P_{arj} \cdot Pa^{-1}\right) \cdot k \cdot q$$

Where V = design volume of the protected space, m^3;

V_{arj}= volume of the j-th air receiver, m^3, refer to Chapter 5, Section 4, [4.13.1];

n = number of air receivers in the protected space;

j = serial number of air receiver;

P_{arj}= working pressure in the j-th air receiver, MPa;

P_a= atmospheric pressure, MPa;

q = normative fi re extinguishing capacity of aerosol, kg/m^3;

k = safety factor equal to 1.5.

7.3.2. The normative fire extinguishing concentration of aerosol depends on the type of generator and generally shall not exceed 0.2 kg/m^3.

7.3.3. Following formula shall be used in order to determine the design number of generators, in pcs

$$N = \frac{G}{m}$$

Where G = design mass of aerosol generating agent, kg;

m = mass of a charge in one generator, kg.

SECTION 8 DISPLAYED INFORMATION

8.1. The following information shall be displayed near the release device, where a space which is regarded as been sealed from adjacent spaces is protected by a fixed system:

CAUTION

BEFORE DISCHARGING
SHUT DOWN ENGINES AND
BLOWERS

Background: Yellow

8.2. Where a space, which is protected by a fixed system, cannot be regarded as being sealed from adjacent spaces, the following information shall be displayed near the release device:

CAUTION

BEFORE DISCHARGING
SHUT DOWN ENGINES AND
BLOWERS

LEAVE ACCOMMODATION

Background: Yellow

8.3. At any entrance to the protected space, if the extinguishing medium is an asphyxiant, the following information shall be displayed :

WARNING

ENGINE COMPARTMENT
HAS FIXED
EXTINGUISHING SYSTEM
TO AVOID ASPHYXIATION

LEAVE THE AREA
BEFORE DISCHARGE

AFTER DISCHARGE
VENTILATE BEFORE
ENTERING

Background: Yellow or orange.

8.4. Near or on any CO_2 portable fire extinguisher, the following information shall be displayed:

WARNING

THIS EXTINGUISHER USES **CO_2** AS AN EXTINGUISHING MEDIUM IT SHALL BE USED ONLY TO FIGHT ELECTRIC OR GALLEY FIRES

TO AVOID ASPHYXIATION AFTER DISCHARGE LEAVE THE AREA IMMEDIATELY AND VENTILATE BEFORE ENTERING

Background: Yellow or orange

SECTION 9 TESTS OF OPEN-FLAME DEVICES

9.1. Tests are conducted immediately on board at the standard location specified for the device.

In order to conduct the test, a metal plate of diameter 200 mm and a thickness of 3 mm ± 0.2 mm shall cover each of the open-flame burners. Simultaneously the flames shall burn in all burners for 10 min, the controls being set to a maximum. In order to verify compliance with the requirements of Sec-2, 2.4, the surface temperature of any material around the open-flame device shall be measured at the end of the burning period.

SECTION 10 OWNER'S MANUAL

Contents

10.1. Fire-fighting equipment

10.1.1. The Owner's Manual shall contain the following instructions and information.

10.1.1.1. Portable fire extinguishers.

When in service, the craft shall be equipped with portable fire extinguishers of the following types and extinguishing capacities, in the following number and in the following locations:

No.1: extinguishing capacity not less than
.....location.....

No.2 extinguishing capacity not less than
.....location.....

No.3 extinguishing capacity not less than
.....location.....

No.n extinguishing capacity not less than
.....location.....

10.1.1.2. Fire blanket.

A fire blanket shall be placed in the following location :(Description of position)

10.1.1.3. Servicing of fire-fighting equipment.

The craft owner/operator shall:

Have fire-fighting equipment checked at the intervals indicated on the equipment;

Replace portable fire extinguishers, if expired or discharged,

By devices of identical fire-fighting capacity; and

Have fixed systems refilled or replaced when expired or discharged.

10.1.1.4. Fire bucket.

At least one fire bucket of a capacity not less than 10.0 l shall be provided to the craft for every 6.0 m of the craft length or part thereof. The fire buckets shall be provided with a hemp lanyard attached and stowed in a readily accessible position. The buckets shall be painted red and bear inscription "FIRE".

10.2. General

10.2.1. With a hull length up to 15 m, craft shall have Instructions on maintenance and performance of all firefighting equipment and systems, installation of which shall be done on board craft in an accessible position completely with related parts and in good order.

10.2.2. With a hull length of 15 m and over, craft shall have a General Arrangement Booklet. The content of the Booklet for the operator and crew shall indicate:

Location of control stations;

Location of fire-resisting and fire-retarding divisions;

Spaces equipped with fixed fire-fighting systems with an indication of the location of fittings ant their control positions;

Location of fire hydrants and nozzles;

Arrangement of fire-fighting equipment;

Ventilation control positions and location of dampers with indication of the group of protected spaces;

Brief description of the performance of fire-fighting systems and structural features of fire protection

10.2.3. Symbols used in the Booklet as far as practicable, shall comply with the IMO Resolution A.952 (23) “Graphical Symbols for Use in Fire Plans”.

10.2.4. Information contained in the Booklet shall be in national language, English or French.

10.2.5. Prior to use on board craft, the INTLREG Surveyor shall be submitted a copy of the Booklet for review and approval. The approved copy shall be kept on board in an accessible place.

10.2.6. Regarding any amendments, the Booklets shall be timely updated and these amendments shall be duly recorded.

10.2.7. Identification of the locations of the appropriate fire-fighting equipment shall be done.